Gearmotors General Catalog



INDUCTION GEARMOTORS

P.31 **G/G3/GA Type Parallel Shaft**

P.217 **H/H2 Type Right Angle Shaft**

P.331 **F/FA Type Right Angle Hollow Bore/Right Angle Shaft**

P.419 **F2/F3 Type Concentric Right Angle Hollow Bore/ Concentric Right Angle Shaft**

P.517 **Technical Documentation**

P.645 **Option**

G/G3/GA Type

Parallel Shaft

Standard Specification
Model and Type Codes
Standard Model Lineup

INDUCTION GEARMOTORS

P.68 **1. Gearmotors/Gearmotors with Brake**
- **1-1. Motor Characteristics Table**
- **1-2. Performance Table**
- **1-3. Drawings**

P.133 **2. IP65 Gearmotors / IP65 Gearmotors with Brake**
- **2-1. Motor Characteristics Table**
- **2-2. Performance Table**
- **2-3. Drawings**

P.162 **3. Gearmotors with Clutch/Brake**
- **3-1. Motor Characteristics Table**
- **3-2. Performance Table**
- **3-3. Drawings**

P.172 **4. Speed Control Gearmotors**
- **4-1. Properties and Motor Characteristics Table**
- **4-2. Graph for Speed Characteristics**
- **4-3. Performance Table**
- **4-4. Drawings**

P.188 **5. Gearboxes (Double Shaft Type)**
- **5-1. Performance Table**
- **5-2. Drawings**

P.200 **6. S-Type Gearboxes (Type That Can Be Equipped with Designated Motor)**
- **6-1. Performance Table**
- **6-2. Drawings**



Standard Specification

G Type Gearmotors/Gearmotors with Brake

Series		MINI	
Motor Unit	Number of Phases	3-Phase	1-Phase
	Power	15 W to 90 W	15 W to 90 W
	Power Supply	Standard Voltage 200 V/50 Hz, 200 V/60 Hz, 220 V/60 Hz High Voltage (400 V Class) 380 V/50 Hz, 400 V/50 Hz, 400 V/60 Hz, 440 V/60 Hz	Standard Voltage 100 V/50 Hz, 100 V/60 Hz High Voltage (200 V Class) 200 V/50 Hz, 200 V/60 Hz
	Insulation Class	Ins. B	Ins. B
	Startup Method	Direct Power Input	Capacitor Run
	Cooling Method	Totally Enclosed Non-Ventilated (TENV) (IC410) or Totally Enclosed Fan Cooled (TEFC) (IC411)	
	Number of Motor Poles	4	
	Rating	Continuous	
Gearbox	Reduction Type	Helical Gear	
	Lubrication Type	Grease Lubrication (Maintenance-free)	
	Output Shaft	JIS Key (JIS B 1301-1996 plain form) * The key is included.	
	Output Shaft Material	Carbon Steel	
	Case Material	Aluminum	
Ambient Conditions	Ambient Temperature	-10 °C to 40 °C	
	Ambient Humidity	85 % max (No Condensation)	
	Altitude	1,000 m max	
	Installation Environment	A place free from corrosive gas, explosive gas, and/or vapor. Well ventilated place with no dust.	
	Installation Place	Indoors	
Paint	Paint Color	Gray	
Mounting Direction		No limitations to mounting angle	
Motor Characteristics Table		P.68	P.69
Performance Table		P.73	
Drawings		P.83	

G3 Type Gearmotors/Gearmotors with Brake

Series		MID				
Motor Unit	Number of Phases	3-Phase				1-Phase
	Power	0.1 kW to 2.2 kW				0.1 kW to 0.4 kW
	Power Supply	Type	Global Standards Conformance	Power Supply/Frequency		Standard Voltage 100 V/50 Hz, 100 V/60 Hz High Voltage (200 V Class) 200 V/50 Hz, 200 V/60 Hz
		Standard Voltage	UL/CE/CCC	200 V/50 Hz, 200 V/60 Hz, 220 V/60 Hz		
		High Voltage (400 V Class)	UL/CE/CCC	380 V/50 Hz, 400 V/50 Hz, 400 V/60 Hz, 440 V/60 Hz		
		Special Voltage	South Korea/ Taiwan UL/CE/CCC	220 V/60 Hz, 380 V/60 Hz (Dual Voltage)		
			China UL/CE/CCC	220 V/50 Hz, 230 V/50 Hz, 380 V/50 Hz (Dual Voltage)		
			China/South Korea/Taiwan UL/CE/CCC	220 V/50 Hz, 220 V/60 Hz, 380 V/50 Hz, 380 V/60 Hz (Dual Voltage) (Note 1)		
			Europe/North America UL/cUL/CE/CCC	415 V/50 Hz, 440 V/50 Hz, 480 V/60 Hz		
			North America/ Europe UL/cUL/CE/CCC	230 V/60 Hz, 460 V/60 Hz, 400 V/50 Hz (Dual Voltage) (Note 2)		
			North America/ Europe UL/cUL/CE/CCC	208 V/60 Hz, 230 V/60 Hz, 460 V/60 Hz, 400 V/50 Hz (Note 3)		
			Canada UL/cUL	575 V/60 Hz		
	Insulation Class	Ins. F				Ins. B
	Startup Method	Direct Power Input				Capacitor Start
	Cooling Method	Totally Enclosed Fan Cooled (TEFC) (IC411) (All of 0.1 kW and 0.2 kW models without brake are totally enclosed non-ventilated (TENV) (IC410))				Totally Enclosed Fan Cooled (TEFC) (IC411) (0.1 kW models without a brake are totally enclosed (TENV) (IC410))
	Number of Motor Poles	4				
	Rating	Power	Motor Efficiency	UL/CE Standard	CCC Standard	Continuous
		0.1 kW	IE1	Continuous	Continuous	
		0.2 kW, 0.4 kW (Note 4)	IE2	Continuous	Short Time (120 minutes)	
		0.75 kW or above	IE3, GB3	Continuous	Continuous	
Gearbox	Reduction Type	Helical Gear				
	Lubrication Type	Grease Lubrication (Maintenance-free)				
	Output Shaft	JIS Key (JIS B 1301-1996 plain form) * The key is included.				
	Output Shaft Material	Carbon Steel				
	Case Material	Aluminum (Frame size 50 is made of cast iron.)				
Ambient Conditions	Ambient Temperature	-10 °C to 40 °C				
	Ambient Humidity	85 % max (No Condensation)				
	Altitude	1,000 m max				
	Installation Environment	A well ventilated place free from corrosive gas, explosive gas, vapor and/or chemicals Not to be exposed to direct rain. Not to be exposed to direct sunlight. The brake should not to be exposed to water, dust, oil/grease, or oil mist. Models with water protection rating IPX0 shall not be exposed directly to water.				
Paint	Paint Color	Gray				
Protective Structure (Note 5)		IP44 or IP40				IP40
Mounting Direction		No limitations to mounting angle				
Motor Characteristics Table		P.70				P.72
Performance Table		P.76				P.80
Drawings		P.83				

Note 1: Applicable motor power is 0.1 kW to 0.75 kW.
Note 2: Applicable motor power is 0.75 kW to 2.2 kW.
Note 3: Applicable motor power is 0.1 kW to 0.4 kW.
Note 4: For CCC Standard, Three-phase 0.2 kW and Three-phase 0.4 kW are certified under limited duty cycle. Please be cautious upon selecting this product.
Note 5: The protective structure differs depending on the model.

GA Type Gearmotors/Gearmotors with Brake

Series		MID				
Motor Unit	Number of Phases	3-Phase				1-Phase
	Power	0.4 kW to 2.2 kW				0.4 kW
	Power Supply	Type	Global Standards Conformance	Power Supply/Frequency		Standard Voltage 100 V/50 Hz, 100 V/60 Hz High Voltage (200 V Class) 200 V/50 Hz, 200 V/60 Hz
		Standard Voltage	UL/CE/CCC	200 V/50 Hz, 200 V/60 Hz, 220 V/60 Hz		
		High Voltage (400 V Class)	UL/CE/CCC	380 V/50 Hz, 400 V/50 Hz, 400 V/60 Hz, 440 V/60 Hz		
		Special Voltage	South Korea/ Taiwan UL/CE/CCC	220 V/60 Hz, 380 V/60 Hz (Dual Voltage)		
			China UL/CE/CCC	220 V/50 Hz, 230 V/50 Hz, 380 V/50 Hz (Dual Voltage)		
			China/South Korea/Taiwan UL/CE/CCC	220 V/50 Hz, 220 V/60 Hz, 380 V/50 Hz, 380 V/60 Hz (Dual Voltage) (Note 1)		
			Europe/North America UL/cUL/CE/CCC	415 V/50 Hz, 440 V/50 Hz, 480 V/60 Hz		
			North America/ Europe UL/cUL/CE/CCC	230 V/60 Hz, 460 V/60 Hz, 400 V/50 Hz (Dual Voltage) (Note 2)		
			North America/ Europe UL/cUL/CE/CCC	208 V/60 Hz, 230 V/60 Hz, 460 V/60 Hz, 400 V/50 Hz (Note 3)		
			Canada UL/cUL	575 V/60 Hz		
	Insulation Class	Ins. F				Ins. B
	Startup Method	Direct Power Input				Capacitor Start
	Cooling Method	Totally Enclosed Fan Cooled (TEFC) (IC411)				Totally Enclosed Fan Cooled (TEFC) (IC411)
	Number of Motor Poles	4				
	Rating	Power	Motor Efficiency	UL/CE Standard	CCC Standard	Continuous
		0.4 kW (Note 4)	IE2	Continuous	Short Time (120 minutes)	
		0.75 kW or above	IE3, GB3	Continuous	Continuous	
Gearbox	Reduction Type	Helical Gear				
	Lubrication Type	Grease Lubrication (Maintenance-free)				
	Output Shaft	JIS Key (JIS B 1301-1996 plain form) * The key is included.				
	Output Shaft Material	Carbon Steel				
	Case Material	Aluminum				
Ambient Conditions	Ambient Temperature	-10 °C to 40 °C				
	Ambient Humidity	85 % max (No Condensation)				
	Altitude	1,000 m max				
	Installation Environment	A well ventilated place free from corrosive gas, explosive gas, vapor and/or chemicals Not to be exposed to direct rain. Not to be exposed to direct sunlight. The brake should not to be exposed to water, dust, oil/grease, or oil mist. Models with water protection rating IPX0 shall not be exposed directly to water.				
Paint	Paint Color	Gray				
Protective Structure (Note 5)		IP44 or IP40				IP40
Mounting Direction		No limitations to mounting angle				
Motor Characteristics Table		P.70				P.72
Performance Table		P.76				P.80
Drawings		P.83				P.84

Note 1: Applicable motor power is 0.4 kW to 0.75 kW.
Note 2: Applicable motor power is 0.75 kW to 2.2 kW.
Note 3: Applicable motor power is 0.4 kW.
Note 4: For CCC Standard, Three-phase 0.4 kW is certified under limited duty cycle. Please be cautious upon selecting this product.
Note 5: The protective structure differs depending on the model.

G/G3 Type IP65 Gearmotors/IP65 Gearmotors with Brake

<table>
<tr><td colspan="2">Series</td><td colspan="2">MINI</td><td colspan="5">MID</td></tr>
<tr><td rowspan="15">Motor Unit</td><td>Number of Phases</td><td>3-Phase</td><td>1-Phase</td><td colspan="5">3-Phase</td></tr>
<tr><td>Power</td><td>15 W to 90 W</td><td>15 W to 60 W</td><td colspan="5">0.1 kW to 2.2 kW</td></tr>
<tr><td rowspan="10">Power Supply</td><td rowspan="10">Standard Voltage
200 V/50 Hz, 200 V/60 Hz, 220 V/60 Hz</td><td rowspan="10">Standard Voltage
100 V/50 Hz, 100 V/60 Hz</td><td>Type</td><td>Global Standards Conformance</td><td colspan="3">Power Supply/ Frequency</td></tr>
<tr><td>Standard Voltage</td><td>UL/CE/CCC</td><td colspan="3">200 V/50 Hz, 200 V/60 Hz, 220 V/60 Hz</td></tr>
<tr><td>High Voltage (400 V Class)</td><td>UL/CE/CCC</td><td colspan="3">380 V/50 Hz, 400 V/50 Hz, 400 V/60 Hz, 440 V/60 Hz</td></tr>
<tr><td rowspan="7">Special Voltage</td><td>South Korea/ Taiwan UL/CE/CCC</td><td colspan="3">220 V/60 Hz, 380 V/60 Hz (Dual Voltage)</td></tr>
<tr><td>China UL/CE/CCC</td><td colspan="3">220 V/50 Hz, 230 V/50 Hz, 380 V/50 Hz (Dual Voltage)</td></tr>
<tr><td>China/South Korea/Taiwan UL/CE/CCC</td><td colspan="3">220 V/50 Hz, 220 V/60 Hz, 380 V/50 Hz, 380 V/60 Hz (Dual Voltage) (Note 1)</td></tr>
<tr><td>Europe/North America UL/cUL/CE/CCC</td><td colspan="3">415 V/50 Hz, 440 V/50 Hz, 480 V/60 Hz</td></tr>
<tr><td>North America/ Europe UL/cUL/CE/CCC</td><td colspan="3">230 V/60 Hz, 460 V/60 Hz, 400 V/50 Hz (Dual Voltage) (Note 2)</td></tr>
<tr><td>North America/ Europe UL/cUL/CE/CCC</td><td colspan="3">208 V/60 Hz, 230 V/60 Hz, 460 V/60 Hz, 400 V/50 Hz (Note 3)</td></tr>
<tr><td>Canada UL/cUL</td><td colspan="3">575 V/60 Hz</td></tr>
<tr><td>Insulation Class</td><td colspan="2">Ins. B</td><td colspan="5">Ins. F</td></tr>
<tr><td>Startup Method</td><td>Direct Power Input</td><td>Capacitor Run</td><td colspan="5">Direct Power Input</td></tr>
<tr><td>Cooling Method</td><td colspan="3">Totally Enclosed Non-Ventilated (TENV) (IC410)</td><td colspan="5">Totally Enclosed Fan Cooled (TEFC) (IC411) (All of 0.1 kW and 0.2 kW models without brake are totally enclosed non-ventilated (TENV) (IC410))</td></tr>
<tr><td>Number of Motor Poles</td><td colspan="7">4</td></tr>
<tr><td rowspan="4">Rating</td><td rowspan="4" colspan="3">Continuous</td><td>Power</td><td>Motor Efficiency</td><td>UL/CE Standard</td><td>CCC Standard</td></tr>
<tr><td>0.1 kW</td><td>IE1</td><td>Continuous</td><td>Continuous</td></tr>
<tr><td>0.2 kW, 0.4 kW (Note 4)</td><td>IE2</td><td>Continuous</td><td>Short Time (120 minutes)</td></tr>
<tr><td>0.75 kW or above</td><td>IE3, GB3</td><td>Continuous</td><td>Continuous</td></tr>
<tr><td rowspan="4">Gearbox</td><td>Reduction Type</td><td colspan="7">Helical Gear</td></tr>
<tr><td>Lubrication Type</td><td colspan="7">Grease Lubrication (Maintenance-free)</td></tr>
<tr><td>Output Shaft</td><td colspan="7">JIS Key (JIS B 1301-1996 plain form)
* The key is included.</td></tr>
<tr><td>Output Shaft Material</td><td colspan="3">Stainless Steel</td><td colspan="4">Stainless steel or carbon steel</td></tr>
<tr><td>Case Material</td><td colspan="3">Aluminum</td><td colspan="4">Aluminum (Frame size 50 is made of cast iron.)</td></tr>
<tr><td rowspan="4">Ambient Conditions</td><td>Ambient Temperature</td><td colspan="7">-10 °C to 40 °C</td></tr>
<tr><td>Ambient Humidity</td><td colspan="7">100 % max (No Condensation)</td></tr>
<tr><td>Altitude</td><td colspan="7">1,000 m max</td></tr>
<tr><td>Installation Environment</td><td colspan="7">A place free from corrosive gas, explosive gas, and/or vapor
Not to be exposed to strong rain and wind.
Not to be exposed to direct sunlight.
Not to be used underwater, environments with exposure to high pressure water splashes, and exposure to cleansing chemicals.</td></tr>
<tr><td>Paint</td><td>Paint Color</td><td colspan="7">Gray</td></tr>
<tr><td colspan="2">Protective Structure</td><td colspan="7">IP65</td></tr>
<tr><td colspan="2">Mounting Direction</td><td colspan="7">No limitations to mounting angle</td></tr>
<tr><td colspan="2">Motor Characteristics Table</td><td colspan="3">P.133</td><td colspan="4">P.134</td></tr>
<tr><td colspan="2">Performance Table</td><td colspan="3">P.136</td><td colspan="4">P.138</td></tr>
<tr><td colspan="2">Drawings</td><td colspan="3">P.142</td><td colspan="4">P.143</td></tr>
</table>

Note 1: Applicable motor power is 0.1 kW to 0.75 kW.
Note 2: Applicable motor power is 0.75 kW to 2.2 kW.
Note 3: Applicable motor power is 0.1 kW to 0.4 kW.
Note 4: For CCC Standard, Three-phase 0.2 kW and Three-phase 0.4 kW are certified under limited duty cycle. Please be cautious upon selecting this product.

GA Type IP65 Gearmotors/IP65 Gearmotors with Brake

Series		MID			
Motor Unit	Number of Phases	3-Phase			
	Power	0.4 kW to 2.2 kW			
	Power Supply	Type	Global Standards Conformance	Power Supply/Frequency	
		Standard Voltage	UL/CE/CCC	200 V/50 Hz, 200 V/60 Hz, 220 V/60 Hz	
		High Voltage (400 V Class)	UL/CE/CCC	380 V/50 Hz, 400 V/50 Hz, 400 V/60 Hz, 440 V/60 Hz	
		Special Voltage	South Korea/Taiwan UL/CE/CCC	220 V/60 Hz, 380 V/60 Hz (Dual Voltage)	
			China UL/CE/CCC	220 V/50 Hz, 230 V/50 Hz, 380 V/50 Hz (Dual Voltage)	
			China/South Korea/Taiwan UL/CE/CCC	220 V/50 Hz, 220 V/60 Hz, 380 V/50 Hz, 380 V/60 Hz (Dual Voltage) (Note 1)	
			Europe/North America UL/cUL/CE/CCC	415 V/50 Hz, 440 V/50 Hz, 480 V/60 Hz	
			North America/Europe UL/cUL/CE/CCC	230 V/60 Hz, 460 V/60 Hz, 400 V/50 Hz (Dual Voltage) (Note 2)	
			North America/Europe UL/cUL/CE/CCC	208 V/60 Hz, 230 V/60 Hz, 460 V/60 Hz, 400 V/50 Hz (Note 3)	
			Canada UL/cUL	575 V/60 Hz	
	Insulation Class	Ins. F			
	Startup Method	Direct Power Input			
	Cooling Method	Totally Enclosed Fan Cooled (TEFC) (IC411)			
	Number of Motor Poles	4			
	Rating	Power	Motor Efficiency	UL/CE Standard	CCC Standard
		0.4 kW (Note 4)	IE2	Continuous	Short Time (120 minutes)
		0.75 kW or above	IE3, GB3	Continuous	Continuous
Gearbox	Reduction Type	Helical Gear			
	Lubrication Type	Grease Lubrication (Maintenance-free)			
	Output Shaft	JIS Key (JIS B 1301-1996 plain form) * The key is included.			
	Output Shaft Material	Stainless steel or carbon steel			
	Case Material	Aluminum			
Ambient Conditions	Ambient Temperature	-10 °C to 40 °C			
	Ambient Humidity	100 % max (No Condensation)			
	Altitude	1,000 m max			
	Installation Environment	A place free from corrosive gas, explosive gas, and/or vapor Not to be exposed to strong rain and wind. Not to be exposed to direct sunlight. Not to be used underwater, environments with exposure to high pressure water splashes, and exposure to cleansing chemicals.			
Paint	Paint Color	Gray			
Protective Structure		IP65			
Mounting Direction		No limitations to mounting angle			
Motor Characteristics Table		P.135			
Performance Table		P.141			
Drawings		P.149			

Note 1: Applicable motor power is 0.4 kW to 0.75 kW.
Note 2: Applicable motor power is 0.75 kW to 2.2 kW.
Note 3: Applicable motor power is 0.4 kW.
Note 4: For CCC Standard, Three-phase 0.4 kW is certified under limited duty cycle. Please be cautious upon selecting this product.

G3 Type Gearmotors with Clutch/Brake

Series		MID
Motor Unit	Number of Phases	3-Phase
	Power	0.1 kW to 0.75 kW
	Power Supply	Standard Voltage 200 V/50 Hz, 200 V/60 Hz, 220 V/60 Hz High Voltage (400 V Class) 380 V/50 Hz, 400 V/50 Hz, 400 V/60 Hz, 440 V/60 Hz
	Insulation Class	Ins. F
	Startup Method	Direct Power Input
	Cooling Method	Totally Enclosed Fan Cooled (TEFC) (IC411) (0.1 kW to 0.2 kW models are totally enclosed non-ventilated. (TENV) (IC410))
	Number of Motor Poles	4
	Rating	Continuous
Gearbox	Reduction Type	Helical Gear
	Lubrication Type	Grease Lubrication (Maintenance-free)
	Output Shaft	JIS Key (JIS B 1301-1996 plain form) * The key is included.
	Output Shaft Material	Carbon Steel
	Case Material	Aluminum
Ambient Conditions	Ambient Temperature	-10 °C to 40 °C
	Ambient Humidity	85 % max (No Condensation)
	Altitude	1,000 m max
	Installation Environment	A place free from corrosive gas, explosive gas, and/or vapor. Well ventilated place with no dust.
	Installation Place	Indoors
Paint	Paint Color	Gray
Mounting Direction		No limitations to mounting angle
Motor Characteristics		P.162
Performance Table		P.163
Drawings		P.165

G Type Speed Control Gearmotors

Series		MINI
Motor Unit	Number of Phases	1-Phase
	Power	15 W to 90 W
	Power Supply	Standard Voltage 100 V/50 Hz, 100 V/60 Hz High Voltage (200 V Class) 200 V/50 Hz, 200 V/60 Hz
	Insulation Class	Ins. B
	Startup Method	Capacitor Run
	Cooling Method	Totally Enclosed Non-Ventilated (TENV) (IC410) (60 to 90 W: provided with a forced fan (TEFC) (IC411))
	Number of Motor Poles	4
	Rating	Continuous
Gearbox	Reduction Type	Helical Gear
	Lubrication Type	Grease Lubrication (Maintenance-free)
	Output Shaft	JIS Key (JIS B 1301-1996 plain form) * The key is included.
	Output Shaft Material	Carbon Steel
	Case Material	Aluminum
Ambient Conditions	Ambient Temperature	-10 °C to 40 °C
	Ambient Humidity	85 % max (No Condensation)
	Altitude	1,000 m max
	Installation Environment	A place free from corrosive gas, explosive gas, and/or vapor. Well ventilated place with no dust.
	Installation Place	Indoors
Paint	Paint Color	Gray
Mounting Direction		No limitations to mounting angle
Motor Characteristics Table		P.172
Performance Table		P.174
Drawings		P.177

G3 Type Gearboxes (Double Shaft Type)

Series		MID
4-Poles Motor Power Class		0.1 kW Class to 2.2 kW Class
Gearbox	Reduction Type	Helical Gear
	Lubrication Type	Grease Lubrication (Maintenance-free)
	Output Shaft	JIS Key (JIS B 1301-1996 plain form) * The key is included.
	Input Shaft	JIS Key (JIS B 1301-1996 plain form) * The key is included.
	Output Shaft Material	Carbon Steel
	Input Shaft Material	Carbon Steel
	Case Material	Aluminum (Frame size 50 is made of cast iron.)
Ambient Conditions	Ambient Temperature	-10 °C to 40 °C
	Ambient Humidity	85 % max (No Condensation)
	Altitude	1,000 m max
	Installation Environment	A place free from corrosive gas, explosive gas, and/or vapor. Well ventilated place with no dust.
	Installation Place	Indoors
Paint	Paint Color	Gray
Mounting Direction		No limitations to mounting angle
Performance Table		P.188
Drawings		P.191

GA Type Gearboxes (Double Shaft Type)

Series		MID
4-Poles Motor Power Class		0.4 kW Class to 2.2 kW Class
Gearbox	Reduction Type	Helical Gear
	Lubrication Type	Grease Lubrication (Maintenance-free)
	Output Shaft	JIS Key (JIS B 1301-1996 plain form) * The key is included.
	Input Shaft	JIS Key (JIS B 1301-1996 plain form) * The key is included.
	Output Shaft Material	Carbon Steel
	Input Shaft Material	Carbon Steel
	Case Material	Aluminum
Ambient Conditions	Ambient Temperature	-10 °C to 40 °C
	Ambient Humidity	85 % max (No Condensation)
	Altitude	1,000 m max
	Installation Environment	A place free from corrosive gas, explosive gas, and/or vapor. Well ventilated place with no dust.
	Installation Place	Indoors
Paint	Paint Color	Gray
Mounting Direction		No limitations to mounting angle
Performance Table		P.190
Drawings		P.194

G3 Type S-Type Gearboxes

Series		MID
4-Poles Motor Power Class		0.1 kW Class to 2.2 kW Class
Gearbox	Reduction Type	Helical Gear
	Lubrication Type	Grease Lubrication (Maintenance-free)
	Output Shaft	JIS Key (JIS B 1301-1996 plain form) * The key is included.
	Output Shaft Material	Carbon Steel
	Case Material	Aluminum (Frame size 50 is made of cast iron.)
Ambient Conditions	Ambient Temperature	-10 °C to 40 °C
	Ambient Humidity	85 % max (No Condensation)
	Altitude	1,000 m max
	Installation Environment	A place free from corrosive gas, explosive gas, and/or vapor. Well ventilated place with no dust.
	Installation Place	Indoors
Paint	Paint Color	Gray
Mounting Direction		No limitations to mounting angle
Performance Table		P.200
Drawings		P.203

GA Type S-Type Gearboxes

Series		MID
4-Poles Motor Power Class		0.4 kW Class to 2.2 kW Class
Gearbox	Reduction Type	Helical Gear
	Lubrication Type	Grease Lubrication (Maintenance-free)
	Output Shaft	JIS Key (JIS B 1301-1996 plain form) * The key is included.
	Output Shaft Material	Carbon Steel
	Case Material	Aluminum
Ambient Conditions	Ambient Temperature	-10 °C to 40 °C
	Ambient Humidity	85 % max (No Condensation)
	Altitude	1,000 m max
	Installation Environment	A place free from corrosive gas, explosive gas, and/or vapor. Well ventilated place with no dust.
	Installation Place	Indoors
Paint	Paint Color	Gray
Mounting Direction		No limitations to mounting angle
Performance Table		P.202
Drawings		P.208

Model and Type Codes

Standard Specification Model and Type Codes

G Type Gearmotors/Gearmotors with Brake MINI Series

Mounting Type	Motor Type		Frame Size		Reduction Ratio		Motor Power	Supply Voltage	Terminal Box	Option	Option Code
GL	M	–	12	–	50	–	T25				
GF	MN	–	40	–	1500	–	S90	W	C	X	T6
①	②		③		④		⑤	⑥	⑦	⑧	⑨

①Mounting Type	GL : Parallel Shaft Foot Mount
	GF : Parallel Shaft Flange Mount
	GK : Parallel Shaft Small Flange Mount (Frame sizes 22 to 32)
②Motor Type	M : With Motor
	MN : With Brakemotor
	MR : Motor with Simple Brake (Option)
③Frame Size and Output Shaft Diameter	Output Shaft Diameter
④Reduction Ratio	5: 1/5 to 1800: 1/1800
⑤Motor Power	T15 : 3-Phase 15 W
	T25 : 3-Phase 25 W
	T40 : 3-Phase 40 W
	T60 : 3-Phase 60 W
	T90 : 3-Phase 90 W
	S15 : 1-Phase 15 W
	S25 : 1-Phase 25 W
	S40 : 1-Phase 40 W
	S60 : 1-Phase 60 W
	S90 : 1-Phase 90 W
⑥Supply Voltage (High Voltage Option)	Blank : Standard Voltage 3-Phase: 200 V/50 Hz, 200 V/60 Hz, 220 V/60 Hz 1-Phase: 100 V/50 Hz, 100 V/60 Hz
	W : High Voltage 3-Phase: 380 V/50 Hz, 400 V/50 Hz, 400 V/60 Hz, 440 V/60 Hz 1-Phase: 200 V/50 Hz, 200 V/60 Hz
⑦Terminal Box (Option) (Note 1)	Blank : Flying Leads (Standard Type)
	T : T Type Terminal Box
	K : K Type Terminal Box
	C : Terminal Box with Built-in Rectifier for Gearmotor with Brake (Note 1)
⑧Option	Blank : Standard Specification
	X : Special Specification Code
⑨Option Code (Note 2)	Lead Wires/Terminal Box Position Code Please refer to the list of option codes on page 581 for details.

Note 1: When using an inverter for a C type terminal box, be sure to designate an AC switching (A) connection.
Please refer to page 591 for details.
Note 2: The option code will not be shown in the nomenclature on the nameplate. But it will be shown in the Option code row of the nameplate.

G3 Type Gearmotors/Gearmotors with Brake MID Series [3-Phase]

Gearhead Type					Motor Type							Brake Specifications	Option	
Mounting Type	Frame Size	Shaft Arrangement	Reduction Ratio		Motor Type	Motor Specifications	Motor Power	Number of Phases	Supply Voltage	Standards	Terminal Box	Brake	Option	Option Code
G3L	18	N	50	–	M	M	01	T	N	N	T	N		
G3F	32	N	100	–	M	M	04	T	W	N	T	B4	X	AA
G3K	32	N	25	–	M	R	15	T	K	N	T	B2	X	T9HZ
①	②	③	④		⑤	⑥	⑦	⑧	⑨	⑩	⑪	⑫	⑬	⑭

①Mounting Type	G3L : Parallel Shaft Foot Mount							
	G3F : Parallel Shaft Flange Mount							
	G3K : Parallel Shaft Small Flange Mount (Frame sizes 18 to 32)							
②Frame Size and Output Shaft Diameter	Output Shaft Diameter							
③Shaft Arrangement	N : Parallel Shaft							
④Reduction Ratio	5: 1/5 to 12X: 1/1200							
⑤Motor Type	M : Standard Induction Motor (IP40 or IP44)							
⑥Motor Specifications (Note 1)	M : IE1 Efficiency Ins. F (0.1 kW) IE2 Efficiency Ins. F (0.2 kW to 0.4 kW)							
	R : IE3 Efficiency Ins. F (0.75 kW to 2.2 kW)							
⑦Motor Power	01 : 0.1 kW							
	02 : 0.2 kW							
	04 : 0.4 kW							
	08 : 0.75 kW							
	15 : 1.5 kW							
	22 : 2.2 kW							
⑧Number of Phases	T : 3-Phase							
⑨Supply Voltage	⑨Supply Voltage (Note 2)	⑫Brake Specifications (Note 3)						
		N	B2	B4	J2	J4		
	N : 200 V/50 Hz, 200 V/60 Hz, 220 V/60 Hz	○	○		○			
	W : 380 V/50 Hz, 400 V/50 Hz, 400 V/60 Hz, 440 V/60 Hz	○		○		○		
	K : 220 V/60 Hz, 380 V/60 Hz	○	○	○	○	○		
	C : 220 V/50 Hz, 230 V/50 Hz, 380 V/50 Hz	○	○	○	○	○		
	D : 220 V/50 Hz, 220 V/60 Hz, 380 V/50 Hz, 380 V/60 Hz	○	○	○	○	○		
	E : 415 V/50 Hz, 440 V/50 Hz, 480 V/60 Hz	○		○		○		
	U : 230 V/60 Hz, 460 V/60 Hz, 400 V/50 Hz	○	○	○	○	○		
	A : 208 V/60 Hz, 230 V/60 Hz, 460 V/60 Hz, 400 V/50 Hz	○	○	○	○	○		
	M : 575 V/60 Hz	○	○		○			
⑩Standards	N : UL/CE/CCC							
	A : UL* Supply Voltage: M (575 V/60 Hz) only							
⑪Terminal Box (Note 4)	T : T Type Terminal Box (steel plate) (induction motor standard)							
	N : Flying Leads							
⑫Brake Specifications	N : No Brake							
	B2 : 200 V Class Brake							
	B4 : 400 V Class Brake							
	J2 : 200 V Class Brakemotor with Manual Release							
	J4 : 400 V Class Brakemotor with Manual Release							
⑬Option	Blank : Standard Specification							
	X : Special Specification Code							
⑭Option Code (Note 5)	Built-in Rectifier Connection Code For details, please refer to the list of option codes on page 561.							
	Terminal Box Position Code For details, please refer to the list of option codes on page 582.							
	For other option codes, please refer to the list of option codes on page 1012.							

Note 1: For CCC Standard, Three-phase 0.2 kW and Three-phase 0.4 kW are certified under limited duty cycle. Please be cautious upon selecting the product.
Note 2: Refer to the following for the corresponding motor powers for supply voltages. Supply voltage D: 0.1 kW to 0.75 kW
Supply voltage U: 0.75 kW to 2.2 kW Supply voltage A: 0.1 kW to 0.4 kW
Dual voltage is not available for gearmotors with brake and supply the voltage code “K”, “C”, “D”, “U” and “A”. The motor voltage is limited by the brake specifications. 200 V class gearmotors with brakes (brake code B2, J2 and V2: blue lead wires) also have an operating voltage in the 200 V class. They cannot be operated in the 400 V class. 400 V class gearmotors with brakes (brake codes B4, J4, and V4: yellow lead wires) also have an operating voltage in the 400 V class. They cannot be operated in the 200 V class.
Note 3: ○ indicates a brake specification that can be manufactured. Note 4: With regard to the types of flying leads, only supply voltage codes N are covered.
Note 5: The option code will not be shown in the nomenclature on the nameplate. But it will be shown in the Option code row of the nameplate.

GA Type Gearmotors/Gearmotors with Brake MID Series [3-Phase]

Gearhead Type					Motor Type							Brake Specifications	Option	
Mounting Type	Frame Size	Shaft Arrangement	Reduction Ratio		Motor Type	Motor Specifications	Motor Power	Number of Phases	Supply Voltage	Standards	Terminal Box	Brake	Option	Option Code
GAL	50	N	600	–	M	M	04	T	N	N	T	N		
GAL	50	N	450	–	M	R	08	T	W	N	T	B4	X	AA
GAL	50	N	30	–	M	R	22	T	K	N	T	B2	X	T9HZ
①	②	③	④		⑤	⑥	⑦	⑧	⑨	⑩	⑪	⑫	⑬	⑭

①Mounting Type	GAL : Parallel Shaft Foot Mount (50-frame only)						
②Frame Size and Output Shaft Diameter	Output Shaft Diameter						
③Shaft Arrangement	N : Parallel Shaft						
④Reduction Ratio	30: 1/30 to 12X: 1/1200						
⑤Motor Type	M : Standard Induction Motor (IP40 or IP44)						
⑥Motor Specifications (Note 1)	M : IE2 Efficiency Ins. F (0.4 kW)						
	R : IE3 Efficiency Ins. F (0.75 kW to 2.2 kW)						
⑦Motor Power	04 : 0.4 kW						
	08 : 0.75 kW						
	15 : 1.5 kW						
	22 : 2.2 kW						
⑧Number of Phases	T : 3-Phase						
⑨Supply Voltage	⑨Supply Voltage (Note 2)	⑫Brake Specifications (Note 3)					
		N	B2	B4	J2	J4	
	N : 200 V/50 Hz, 200 V/60 Hz, 220 V/60 Hz	○	○		○		
	W : 380 V/50 Hz, 400 V/50 Hz, 400 V/60 Hz, 440 V/60 Hz	○		○		○	
	K : 220 V/60 Hz, 380 V/60 Hz	○	○	○	○	○	
	C : 220 V/50 Hz, 230 V/50 Hz, 380 V/50 Hz	○	○	○	○	○	
	D : 220 V/50 Hz, 220 V/60 Hz, 380 V/50 Hz, 380 V/60 Hz	○	○	○	○	○	
	E : 415 V/50 Hz, 440 V/50 Hz, 480 V/60 Hz	○		○		○	
	U : 230 V/60 Hz, 460 V/60 Hz, 400 V/50 Hz	○	○	○	○	○	
	A : 208 V/60 Hz, 230 V/60 Hz, 460 V/60 Hz, 400 V/50 Hz	○	○	○	○	○	
	M : 575 V/60 Hz	○	○		○		
⑩Standards	N : UL/CE/CCC						
	A : UL* Supply Voltage: M (575 V/60 Hz) only						
⑪Terminal Box (Note 4)	T : T Type Terminal Box (steel plate) (induction motor standard)						
	N : Flying Leads						
⑫Brake Specifications	N : No Brake						
	B2 : 200 V Class Brake						
	B4 : 400 V Class Brake						
	J2 : 200 V Class Brakemotor with Manual Release						
	J4 : 400 V Class Brakemotor with Manual Release						
⑬Option	Blank : Standard Specification						
	X : Special Specification Code						
⑭Option Code (Note 5)	Built-in Rectifier Connection Code For details, please refer to the list of option codes on page 561.						
	Terminal Box Position Code For details, please refer to the list of option codes on page 582.						
	For other option codes, please refer to the list of option codes on page 1012.						

Note 1: For CCC Standard, Three-phase 0.4 kW is certified under limited duty cycle. Please be cautious upon selecting the product.
Note 2: Refer to the following for the corresponding motor powers for supply voltages.
Supply voltage D: 0.4 kW to 0.75 kW Supply voltage U: 0.75 kW to 2.2 kW Supply voltage A: 0.4 kW
Dual voltage is not available for gearmotors with brake and supply the voltage code “K”, “C”, “D”, “U” and “A”.
The motor voltage is limited by the brake specifications.
Note 3: ○ indicates a brake specification that can be manufactured.
Note 4: With regard to the types of flying leads, only supply voltage codes N are covered.
Note 5: The option code will not be shown in the nomenclature on the nameplate. But it will be shown in the Option code row of the nameplate.

G3 Type Gearmotors/Gearmotors with Brake MID Series [1-Phase]

Gearhead Type					Motor Type							Brake Specifications	Option	
Mounting Type	Frame Size	Shaft Arrangement	Reduction Ratio		Motor Type	Motor Specifications	Motor Power	Number of Phases	Supply Voltage	Standards	Terminal Box	Brake	Option	Option Code
G3L	18	N	50	–	M	M	01	C	N	J	A	N		
G3F	32	N	450	–	M	M	02	C	W	J	A	B2		
G3K	28	N	100	–	M	M	04	C	N	J	A	B2	X	T9HZ
①	②	③	④		⑤	⑥	⑦	⑧	⑨	⑩	⑪	⑫	⑬	⑭

①Mounting Type	G3L : Parallel Shaft Foot Mount
	G3F : Parallel Shaft Flange Mount
	G3K : Parallel Shaft Small Flange Mount (Frame sizes 18 to 32)
②Frame Size and Output Shaft Diameter	Output Shaft Diameter
③Shaft Arrangement	N : Parallel Shaft
④Reduction Ratio	5: 1/5 to 12X: 1/1200
⑤Motor Type	M : Standard Induction Motor (IP40)
⑥Motor Specifications	M : IE1 Efficiency Ins. B
⑦Motor Power	01 : 0.1 kW
	02 : 0.2 kW
	04 : 0.4 kW
⑧Number of Phases	C : 1-Phase Capacitor Start
⑨Supply Voltage (Note 1)	N : 100 V/50 Hz, 100 V/60 Hz
	W : 200 V/50 Hz, 200 V/60 Hz
⑩Standards	J : No Standards
⑪Terminal Box	A : A Type Terminal Box (Aluminum)
⑫Brake Specifications	N : No Brake
	B2 : 200 V Class Brake
⑬Option	Blank : Standard Specification
	X : Special Specification Code
⑭Option Code (Note 2)	Terminal Box Position Code Please refer to page 584 for details.

Note 1: For voltages/frequencies not listed above, please contact your nearest Sales Office or the CS Center.
Note 2: The option code will not be shown in the nomenclature on the nameplate. But it will be shown in the Option code row of the nameplate.

GA Type Gearmotors/Gearmotors with Brake MID Series [1-Phase]

Gearhead Type					Motor Type							Brake Specifications	Option	
Mounting Type	Frame Size	Shaft Arrangement	Reduction Ratio		Motor Type	Motor Specifications	Motor Power	Number of Phases	Supply Voltage	Standards	Terminal Box	Brake	Option	Option Code
GAL	50	N	600	–	M	M	04	C	N	J	A	N		
GAL	50	N	900	–	M	M	04	C	W	J	A	B2		
GAL	50	N	12X	–	M	M	04	C	N	J	A	B2	X	T9HZ
①	②	③	④		⑤	⑥	⑦	⑧	⑨	⑩	⑪	⑫	⑬	⑭

①Mounting Type	GAL : Parallel Shaft Foot Mount (50-frame only)
②Frame Size and Output Shaft Diameter	Output Shaft Diameter
③Shaft Arrangement	N : Parallel Shaft
④Reduction Ratio	600: 1/600 to 12X: 1/1200
⑤Motor Type	M : Standard Induction Motor (IP40)
⑥Motor Specifications	M : IE1 Efficiency Ins. B
⑦Motor Power	04 : 0.4 kW
⑧Number of Phases	C : 1-Phase Capacitor Start
⑨Supply Voltage (Note 1)	N : 100 V/50 Hz, 100 V/60 Hz
	W : 200 V/50 Hz, 200 V/60 Hz
⑩Standards	J : No Standards
⑪Terminal Box	A : A Type Terminal Box (Aluminum)
⑫Brake Specifications	N : No Brake
	B2 : 200 V Class Brake
⑬Option	Blank : Standard Specification
	X : Special Specification Code
⑭Option Code (Note 2)	Terminal Box Position Code Please refer to page 584 for details.

Note 1: For voltages/frequencies not listed above, please contact your nearest Sales Office or the CS Center.
Note 2: The option code will not be shown in the nomenclature on the nameplate. But it will be shown in the Option code row of the nameplate.

G Type IP65 Gearmotors/IP65 Gearmotors with Brake MINI Series

Mounting Type	Motor Type		Frame Size		Reduction Ratio		Motor Power	Option	Option Code
GL	W	–	12	–	50	–	T25		
GF	V	–	18	–	200	–	T90	X	T6
①	②		③		④		⑤	⑥	⑦

①Mounting Type	GL	: Parallel Shaft Foot Mount
	GF	: Parallel Shaft Flange Mount
②Motor Type	W	: With IP65 Motor (Output Shaft Material: Stainless Steel)
	V	: With IP65 Brakemotor (Output Shaft Material: Stainless Steel)
③Frame Size and Output Shaft Diameter	Output Shaft Diameter	
④Reduction Ratio	5: 1/5 to 240: 1/240	
⑤Motor Power and Supply Voltage/ Frequency	T15	: 3-Phase 15 W
	T25	: 3-Phase 25 W
	T40	: 3-Phase 40 W
	T60	: 3-Phase 60 W
	T90	: 3-Phase 90 W
	S15	: 1-Phase 15 W
	S25	: 1-Phase 25 W
	S40	: 1-Phase 40 W
	S60	: 1-Phase 60 W
	3-Phase 1-Phase	: 200 V/50 Hz, 200 V/60 Hz, 220 V/60 Hz : 100 V/50 Hz, 100 V/60 Hz
⑥Option	Blank	: Standard Specification
	X	: Special Specification Code
⑦Option Code (Note 1)	Cabtyre Cable Position Code Please refer to the list of option codes on page 581 for details.	

Note 1: The option code will not be shown in the nomenclature on the nameplate. But it will be shown in the Option code row of the nameplate.

G3 Type IP65 Gearmotors/IP65 Gearmotors with Brake MID Series

Gearhead Type					Motor Type							Brake Specifications	Option	
Mounting Type	Frame Size	Shaft Arrangement	Reduction Ratio		Motor Type	Motor Specifications	Motor Power	Number of Phases	Supply Voltage	Standards	Terminal Box	Brake	Option	Option Code
G3L	18	N	50	–	W	M	01	T	N	N	E	N		
G3F	32	S	100	–	W	M	04	T	W	N	E	V4	X	AA
G3K	32	N	60	–	W	R	08	T	K	N	E	V2	X	T9HZ
①	②	③	④		⑤	⑥	⑦	⑧	⑨	⑩	⑪	⑫	⑬	⑭

①Mounting Type	G3L : Parallel Shaft Foot Mount		
	G3F : Parallel Shaft Flange Mount		
	G3K : Parallel Shaft Small Flange Mount (Frame sizes 18 to 32)		
②Frame Size and Output Shaft Diameter	Output Shaft Diameter		
③Shaft Arrangement and Material	Shaft Arrangement		Parallel Shaft
	Material	Carbon Steel	N
		Stainless Steel	S
④Reduction Ratio	5: 1/5 to 12X: 1/1200		
⑤Motor Type	W : IP65 Induction Motor		
⑥Motor Specifications (Note 1)	M : IE1 Efficiency Ins. F (0.1 kW) IE2 Efficiency Ins. F (0.2 kW to 0.4 kW)		
	R : IE3 Efficiency Ins. F (0.75 kW to 2.2 kW)		
⑦Motor Power	01 : 3-Phase 0.1 kW		
	02 : 3-Phase 0.2 kW		
	04 : 3-Phase 0.4 kW		
	08 : 3-Phase 0.75 kW		
	15 : 3-Phase 1.5 kW		
	22 : 3-Phase 2.2 kW		
⑧Number of Phases (Note 2)	T : 3-Phase		

⑨Supply Voltage (Note 3)	⑫Brake Specifications (Note 4)		
	N	V2	V4
N : 200 V/50 Hz, 200 V/60 Hz, 220 V/60 Hz	○	○	
W : 380 V/50 Hz, 400 V/50 Hz, 400 V/60 Hz, 440 V/60 Hz	○		○
K : 220 V/60 Hz, 380 V/60 Hz	○	○	○
C : 220 V/50 Hz, 230 V/50 Hz, 380 V/50 Hz	○	○	○
D : 220 V/50 Hz, 220 V/60 Hz, 380 V/50 Hz, 380 V/60 Hz	○	○	○
E : 415 V/50 Hz, 440 V/50 Hz, 480 V/60 Hz	○		○
U : 230 V/60 Hz, 460 V/60 Hz, 400 V/50 Hz	○	○	○
A : 208 V/60 Hz, 230 V/60 Hz, 460 V/60 Hz, 400 V/50 Hz	○	○	○
M : 575 V/60 Hz	○	○	

⑨Supply Voltage	⑩Standards	N : UL/CE/CCC
		A : UL* Supply Voltage: M (575 V/60 Hz) only
	⑪Terminal Box	E : E Type Terminal Box (Aluminum)
	⑫Brake Specifications (Note 6)	N : No Brake
		V2 : IP65 200 V Class Brake (Note 5)
		V4 : IP65 400 V Class Brake (Note 5)
	⑬Option	Blank : Standard Specification
		X : Special Specification Code
	⑭Option Code (Note 7)	Built-in Rectifier Connection Code For details, please refer to the list of option codes on page 561.
		Terminal Box Position Code For details, please refer to the list of option codes on page 582.
		For other option codes, please refer to the list of option codes on page 1012.

Note 1: For CCC Standard, Three-phase 0.2 kW and Three-phase 0.4 kW are certified under limited duty cycle. Please be cautious upon selecting the product.
Note 2: Single-phase types are not available.
Note 3: Refer to the following for the corresponding motor powers for supply voltages.
Supply voltage D: 0.1 kW to 0.75 kW Supply voltage U: 0.75 kW to 2.2 kW Supply voltage A: 0.1 kW to 0.4 kW
Dual voltage is not available for gearmotors with brake and supply the voltage code “K”, “C”, “D”, “U” and “A”.
The motor voltage is limited by the brake specifications.
Note 4: ○ indicates a brake specification that can be manufactured.
Note 5: IP65 gearmotors with a brake are not available for 1.5 kW and 2.2 kW.
Note 6: The rectifier is included with the product.
Note 7: The option code will not be shown in the nomenclature on the nameplate. But it will be shown in the Option code row of the nameplate.

GA Type IP65 Gearmotors/IP65 Gearmotors with Brake MID Series

Gearhead Type					Motor Type							Brake Specifications	Option	
Mounting Type	Frame Size	Shaft Arrangement	Reduction Ratio		Motor Type	Motor Specifications	Motor Power	Number of Phases	Supply Voltage	Standards	Terminal Box	Brake	Option	Option Code
GAL	50	N	600	–	W	M	04	T	N	N	E	N		
GAL	50	N	450	–	W	R	08	T	W	N	E	V4	X	AA
GAL	50	N	30	–	W	R	22	T	K	N	E	V2	X	T9HZ
①	②	③	④		⑤	⑥	⑦	⑧	⑨	⑩	⑪	⑫	⑬	⑭

①Mounting Type	GAL : Parallel Shaft Foot Mount (50-frame only)		
②Frame Size and Output Shaft Diameter	Output Shaft Diameter		
③Shaft Arrangement and Material	Shaft Arrangement		Parallel Shaft
	Material	Carbon Steel	N
		Stainless Steel	S
④Reduction Ratio	3: 1/30 to 12X: 1/1200		
⑤Motor Type	W : IP65 Induction Motor		
⑥Motor Specifications (Note 1)	M : IE2 Efficiency Ins. F (0.4 kW)		
	R : IE3 Efficiency Ins. F (0.75 kW to 2.2 kW)		
⑦Motor Power	04 : 3-Phase 0.4 kW		
	08 : 3-Phase 0.75 kW		
	15 : 3-Phase 1.5 kW		
	22 : 3-Phase 2.2 kW		
⑧Number of Phases (Note 2)	T : 3-Phase		

⑨Supply Voltage (Note 3)	⑫Brake Specifications (Note 4)		
	N	V2	V4
N : 200 V/50 Hz, 200 V/60 Hz, 220 V/60 Hz	○	○	
W : 380 V/50 Hz, 400 V/50 Hz, 400 V/60 Hz, 440 V/60 Hz	○		○
K : 220 V/60 Hz, 380 V/60 Hz	○	○	○
C : 220 V/50 Hz, 230 V/50 Hz, 380 V/50 Hz	○	○	○
D : 220 V/50 Hz, 220 V/60 Hz, 380 V/50 Hz, 380 V/60 Hz	○	○	○
E : 415 V/50 Hz, 440 V/50 Hz, 480 V/60 Hz	○		○
U : 230 V/60 Hz, 460 V/60 Hz, 400 V/50 Hz	○	○	○
A : 208 V/60 Hz, 230 V/60 Hz, 460 V/60 Hz, 400 V/50 Hz	○	○	○
M : 575 V/60 Hz	○	○	

⑩Standards	N	: UL/CE/CCC
	A	: UL* Supply Voltage: M (575 V/60 Hz) only
⑪Terminal Box	E	: E Type Terminal Box (Aluminum)
⑫Brake Specifications (Note 6)	N	: No Brake
	V2	: IP65 200 V Class Brake (Note 5)
	V4	: IP65 400 V Class Brake (Note 5)
⑬Option	Blank	: Standard Specification
	X	: Special Specification Code
⑭Option Code (Note 7)	Built-in Rectifier Connection Code For details, please refer to the list of option codes on page 561.	
	Terminal Box Position Code For details, please refer to the list of option codes on page 582.	
	For other option codes, please refer to the list of option codes on page 1012.	

Note 1: For CCC Standard, Three-phase 0.4 kW is certified under limited duty cycle. Please be cautious upon selecting the product.
Note 2: Single-phase types are not available.
Note 3: Refer to the following for the corresponding motor powers for supply voltages.
Supply voltage D: 0.4 kW to 0.75 kW Supply voltage U: 0.75 kW to 2.2 kW Supply voltage A: 0.4 kW
Dual voltage is not available for gearmotors with brake and supply the voltage code “K”, “C”, “D”, “U” and “A”.
The motor voltage is limited by the brake specifications.
Note 4: ○ indicates a brake specification that can be manufactured.
Note 5: IP65 gearmotors with a brake are not available for 1.5 kW and 2.2 kW.
Note 6: The rectifier is included with the product.
Note 7: The option code will not be shown in the nomenclature on the nameplate. But it will be shown in the Option code row of the nameplate.

G3 Type Gearmotors with Clutch/Brake MID Series

Gearhead Type					Motor Type							Brake Specifications	Option	
Mounting Type	Frame Size	Shaft Arrangement	Reduction Ratio		Motor Type	Motor Specifications	Motor Power	Number of Phases	Supply Voltage	Standards	Terminal Box	Brake	Option	Option Code
G3L	18	N	25	–	E	M	02	T	N	J	T	N		
G3F	22	N	80	–	E	M	04	T	W	J	T	N		
G3K	32	N	100	–	E	R	08	T	W	J	T	N	X	T9HZ
①	②	③	④		⑤	⑥	⑦	⑧	⑨	⑩	⑪	⑫	⑬	⑭

①Mounting Type	G3L	: Parallel Shaft Foot Mount
	G3F	: Parallel Shaft Flange Mount
	G3K	: Parallel Shaft Small Flange Mount (Frame sizes 18 to 32)
②Frame Size and Output Shaft Diameter	Output Shaft Diameter	
③Shaft Arrangement	N	: Parallel Shaft
④Reduction Ratio	5: 1/5 to 200: 1/200	
⑤Motor Type	E	: Induction Motor With Clutch/Brake
⑥Motor Specifications	M	: IE1 Efficiency Ins. F (0.1 kW) IE2 Efficiency Ins. F (0.2 kW to 0.4 kW)
	R	: IE3 Efficiency Ins. F
⑦Motor Power	01	: 0.1 kW
	02	: 0.2 kW
	04	: 0.4 kW
	08	: 0.75 kW
⑧Number of Phases	T	: 3-Phase
⑨Supply Voltage (Note 1)	N	: 200 V/50 Hz, 200 V/60 Hz, 220 V/60 Hz
	W	: 380 V/50 Hz, 400 V/50 Hz, 400 V/60 Hz, 440 V/60 Hz
⑩Standards	J	: No Standards
⑪Terminal Box	T	: T Type Terminal Box (Steel Plate)
⑫Brake Specifications	N	: No Brake (With Clutch/Brake)
⑬Option	Blank	: Standard Specification
	X	: Special Specification Code
⑭Option Code (Note 2)	Terminal Box Position Code Please refer to page 584 for details.	

Note 1: For voltages/frequencies not listed above, please contact your nearest Sales Office or the CS Center.
Note 2: The option code will not be shown in the nomenclature on the nameplate. But it will be shown in the Option code row of the nameplate.
Note 3: Please avoid using gearmotors with clutch/brake in vertical operation (lifting). There is a danger of falling during a power outage.

G Type Speed Control Gearmotors MINI Series

Mounting Type	Motor Type		Frame Size		Reduction Ratio		Motor Power	Supply Voltage	Terminal Box	Option	Option Code
GL	U	–	12	–	50	–	S25				
GF	P	–	40	–	1500	–	S90	W	C	X	T6
①	②		③		④		⑤	⑥	⑦	⑧	⑨

①Mounting Type	GL	: Parallel Shaft Foot Mount
	GF	: Parallel Shaft Flange Mount
	GK	: Parallel Shaft Small Flange Mount (Frame sizes 22 to 32)
②Motor Type	U	: U Type with Speed Control Motor (Controller Set)
	P	: P Type with Speed Control Motor (Controller: Sold Separately)
③Frame Size and Output Shaft Diameter	Output Shaft Diameter	
④Reduction Ratio	5: 1/5 to 1800: 1/1800	
⑤Motor Power	S15	: 1-Phase 15 W
	S25	: 1-Phase 25 W
	S40	: 1-Phase 40 W
	S60	: 1-Phase 60 W
	S90	: 1-Phase 90 W
⑥Supply Voltage (High Voltage Option)	Blank 1-Phase	: Standard Voltage : 100 V/50 Hz, 100 V/60 Hz
	W 1-Phase	: High Voltage (200 V Class) : 200 V/50 Hz, 200 V/60 Hz
⑦Terminal Box (Option) (Note 1)	Blank	: Flying Leads (Standard Type)
	C	: Terminal Box for P Type Speed Controller
⑧Option	Blank	: Standard Specification
	X	: Special Specification Code
⑨Option Code (Note 2)	Lead Wires/Terminal Box Position Code Please refer to the list of option codes on page 581 for details.	

Note 1: Please refer to page 639 for the specifications of terminal boxes.
Note 2: The option code will not be shown in the nomenclature on the nameplate. But it will be shown in the Option code row of the nameplate.

Controller

■ Type Code

Part Number		Supply Voltage	Function	Part Number
SC	P	– 10	1	L

- L: Blank: U Type; L: P Type
- 1: Function
  - 0: Only Variable Speed (Only U Type)
  - 1: Variable Speed + Instant Stop
  - 2: Variable Speed + Instant Stop + Slow Start/Slow Down
  - 3: Variable Speed + Instant Stop + Slow Start/Slow Down + Parallel Operation
- 10: Voltage
  - 10: 1-Phase 100 V
  - 20: 1-Phase 200 V
- P: U: U Type (sold in set with gearmotor); P: P Type (sold separately from gearmotor)
- SC: SC: Generic name for Speed Controller

G3 Type Gearboxes (Double Shaft Type) MID Series

Mounting Type	Motor Type		Frame Size		Reduction Ratio		Motor Power Class	Option	Terminal Box	Option	Option Code
G3L		–	22	–	50	–	020				
G3F		–	40	–	200	–	075			X	
①	②		③		④		⑤	⑥	⑦	⑧	⑨

①Mounting Type	G3L : Parallel Shaft Foot Mount
	G3F : Parallel Shaft Flange Mount
	G3K : Parallel Shaft Small Flange Mount (Frame sizes 18 to 32)
②Motor Type	Blank : Without Motor (Double Shaft Type)
③Frame Size and Output Shaft Diameter	Output Shaft Diameter
④Reduction Ratio	5: 1/5 to 1200: 1/1200
⑤Motor Power Class	010 : 0.1 kW Class
	020 : 0.2 kW Class
	040 : 0.4 kW Class
	075 : 0.75 kW Class
	150 : 1.5 kW Class
	220 : 2.2 kW Class
⑥Option	Blank : Standard Specification There is no applicable option.
⑦Terminal Box	Blank : Standard Specification
⑧Option	Blank : Standard Specification
	X : Special Specification Code
⑨Option Code (Note 1)	Blank : Standard Specification

Note 1: The option code will not be shown in the nomenclature on the nameplate. But it will be shown in the Option code row of the nameplate.

GA Type Gearboxes (Double Shaft Type) MID Series

Mounting Type	Motor Type		Frame Size		Reduction Ratio		Motor Power Class	Option	Terminal Box	Option	Option Code
GAL		–	50	–	600	–	040				
GAL		–	50	–	450	–	075				
GAL		–	50	–	30	–	220			X	
①	②		③		④		⑤	⑥	⑦	⑧	⑨

①Mounting Type	GAL : Parallel Shaft Foot Mount (50-frame only)
②Motor Type	Blank : Without Motor (Double Shaft Type)
③Frame Size and Output Shaft Diameter	Output Shaft Diameter
④Reduction Ratio	30: 1/30 to 1200: 1/1200
⑤Motor Power Class	040 : 0.4 kW Class
	075 : 0.75 kW Class
	150 : 1.5 kW Class
	220 : 2.2 kW Class
⑥Option	Blank : Standard Specification There is no applicable option.
⑦Terminal Box	Blank : Standard Specification
⑧Option	Blank : Standard Specification
	X : Special Specification Code
⑨Option Code (Note 1)	Blank : Standard Specification

Note 1: The option code will not be shown in the nomenclature on the nameplate. But it will be shown in the Option code row of the nameplate.

G3 Type S-Type Gearboxes MID Series

Mounting Type	Motor Type		Frame Size		Reduction Ratio		Motor Power Class	Option	Terminal Box	Option
G3L	S	–	22	–	50	–	020			
G3F	S	–	40	–	200	–	075			X
①	②		③		④		⑤	⑥	⑦	⑧

①Mounting Type	G3L : Parallel Shaft Foot Mount
	G3F : Parallel Shaft Flange Mount
	G3K : Parallel Shaft Small Flange Mount (Frame sizes 18 to 32)
②Motor Type	S : Type That Can be Equipped with Designated Motor (S-Type)
③Frame Size and Output Shaft Diameter	Output Shaft Diameter
④Reduction Ratio	5: 1/5 to 1200: 1/1200
⑤Motor Power Class	010 : 0.1 kW Class
	020 : 0.2 kW Class
	040 : 0.4 kW Class
	075 : 0.75 kW Class
	150 : 1.5 kW Class
	220 : 2.2 kW Class
⑥Option	Blank : Standard Specification
⑦Terminal Box	Blank : Standard Specification
⑧Option	Blank : Standard Specification
	X : Special Specification Code

GA Type S-Type Gearboxes MID Series

Mounting Type	Motor Type		Frame Size		Reduction Ratio		Motor Power Class	Option	Terminal Box	Option
GAL	S	–	50	–	600	–	040			
GAL	S	–	50	–	100	–	100			X
①	②		③		④		⑤	⑥	⑦	⑧

①Mounting Type	GAL : Parallel Shaft Foot Mount (50-frame only)
②Motor Type	S : Type That Can be Equipped with Designated Motor (S-Type)
③Frame Size and Output Shaft Diameter	Output Shaft Diameter
④Reduction Ratio	30: 1/30 to 1200: 1/1200
⑤Motor Power Class	040 : 0.4 kW Class
	075 : 0.75 kW Class
	150 : 1.5 kW Class
	220 : 2.2 kW Class
⑥Option	Blank : Standard Specification
⑦Terminal Box	Blank : Standard Specification
⑧Option	Blank : Standard Specification
	X : Special Specification Code

Standard Model Lineup

G Type Gearmotors/Gearmotors with Brake MINI Series

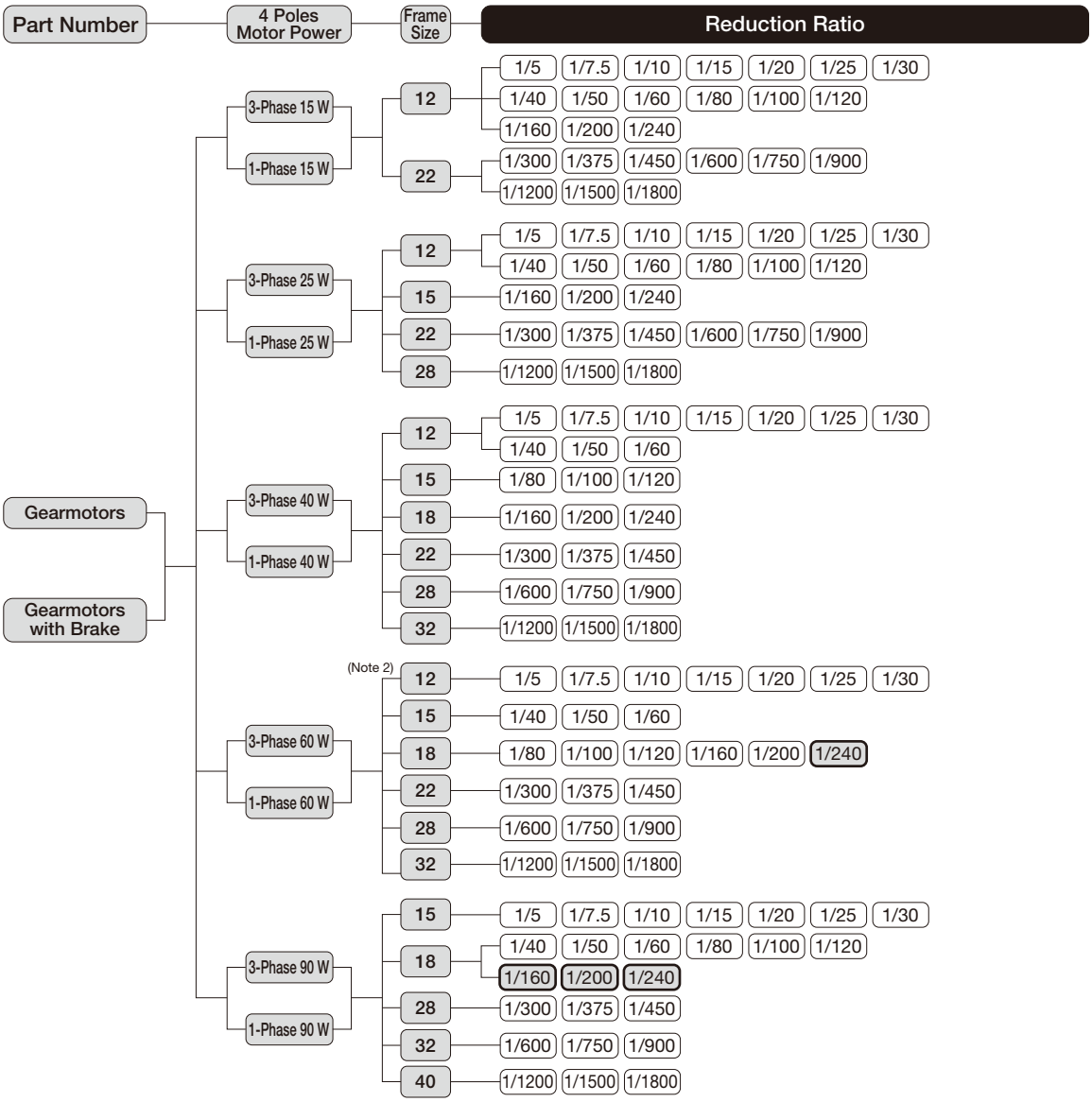

Note 1: Please note that mounting type GK is available only for frame sizes 22 to 32.
Note 2: The frame size for types other than Three-phase standard voltage types is 15. The frame size for all Single-phase types is 15.
Note 3: ⬭ indicates a limited torque type. Please make sure to check the allowable output shaft torque in the performance table.

G3 Type Gearmotors/Gearmotors with Brake MID Series

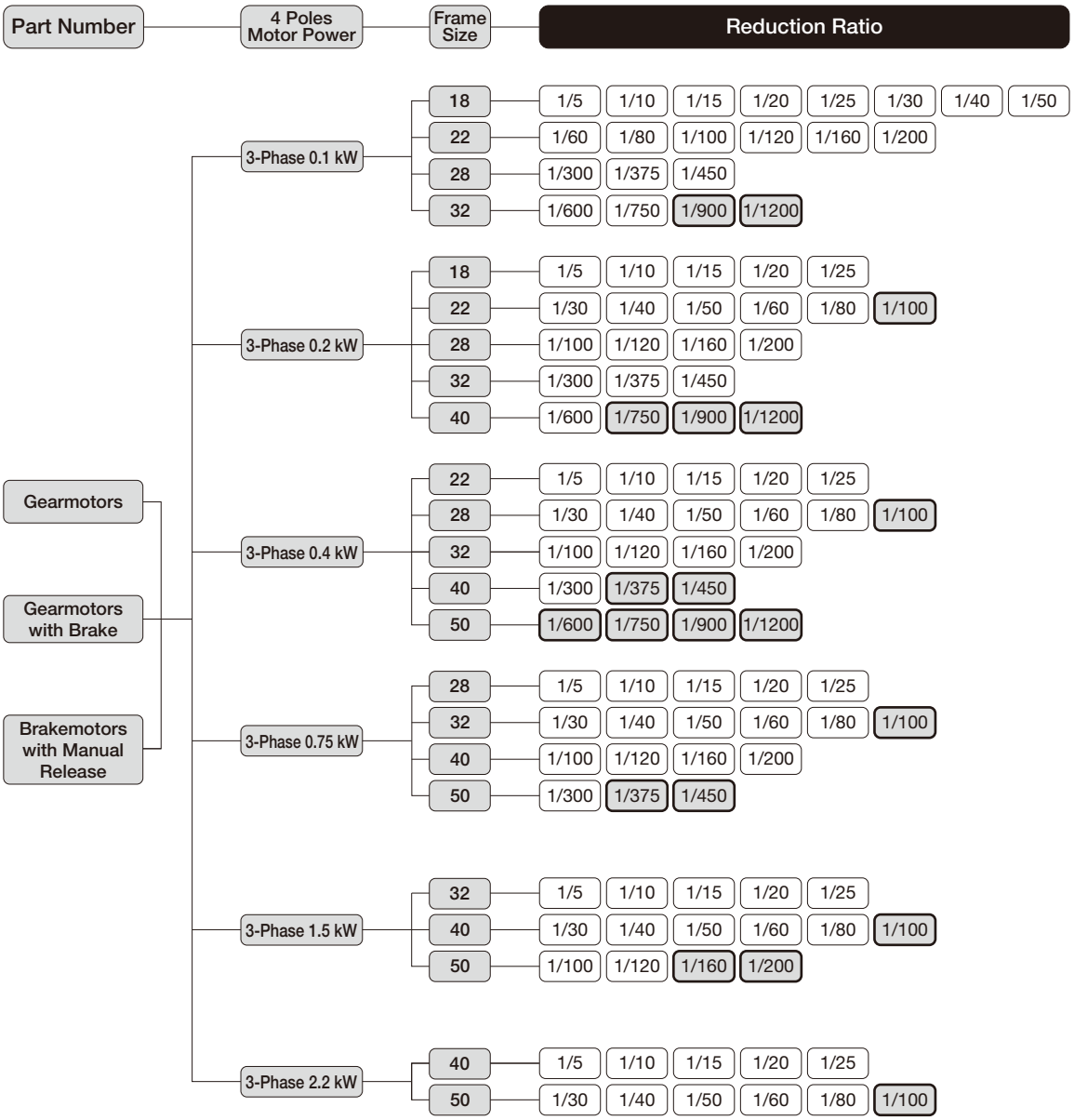

Note 1: The G3 Type is available in three types: Foot mount, Flange mount, and Small flange mount.
Please note that mounting type G3K is available only for frame sizes 18 to 32.

Note 2: ▭ indicates a limited torque type. Please make sure to check the allowable output shaft torque in the performance table.

GA Type Gearmotors/Gearmotors with Brake MID Series

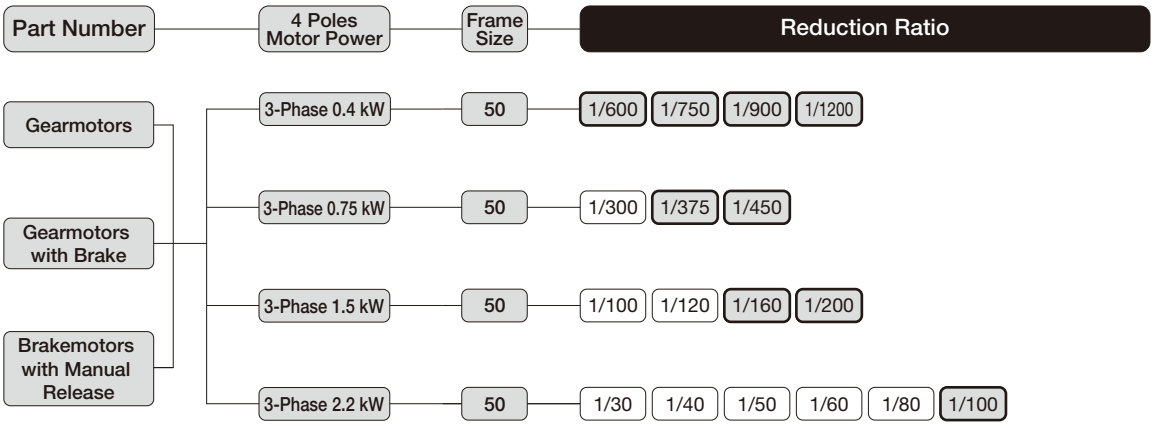

Note 1: ▭ indicates a limited torque type. Please make sure to check the allowable output shaft torque in the performance table.

G3 Type Gearmotors/Gearmotors with Brake MID Series

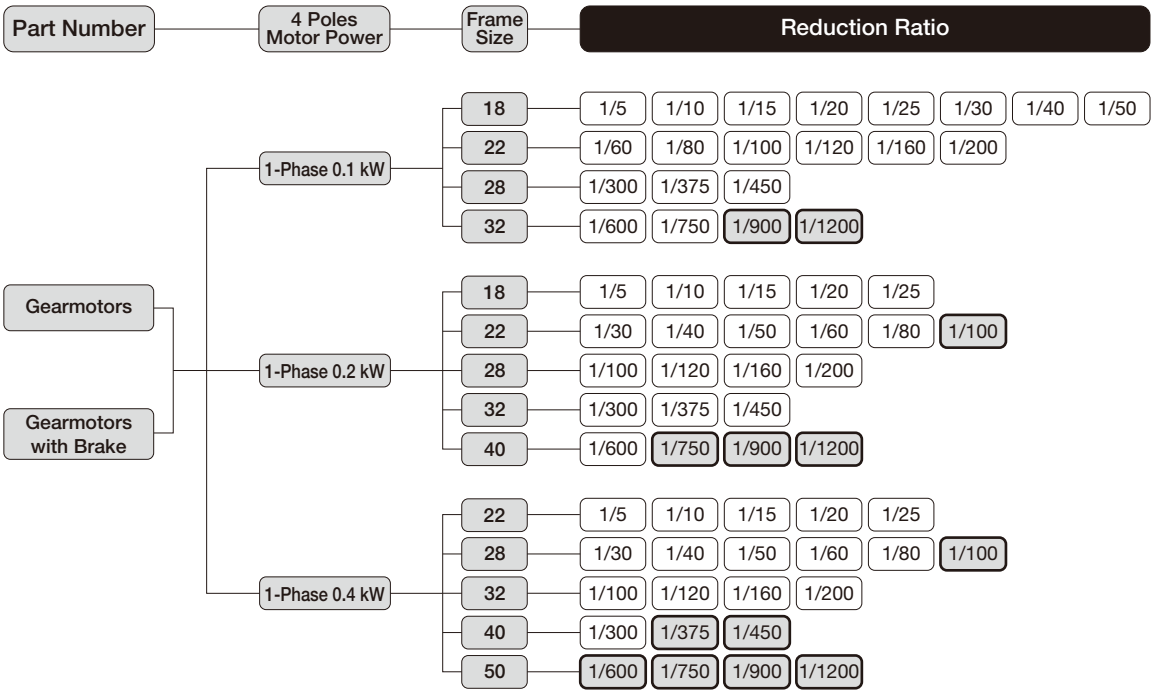

Note 1: The G3 Type is available in three types: Foot mount, Flange mount, and Small flange mount.
Please note that mounting type G3K is available only for frame sizes 18 to 32.
Note 2: ▭ indicates a limited torque type. Please make sure to check the allowable output shaft torque in the performance table.

GA Type Gearmotors/Gearmotors with Brake MID Series

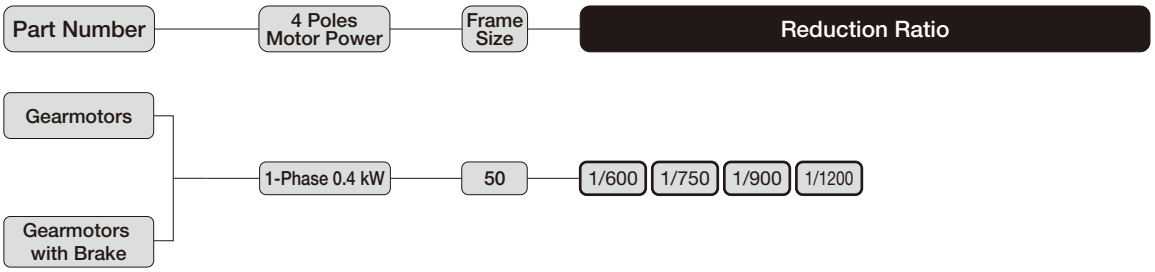

Note 1: ▭ indicates a limited torque type. Please make sure to check the allowable output shaft torque in the performance table.

G Type IP65 Gearmotors/IP65 Gearmotors with Brake MINI Series

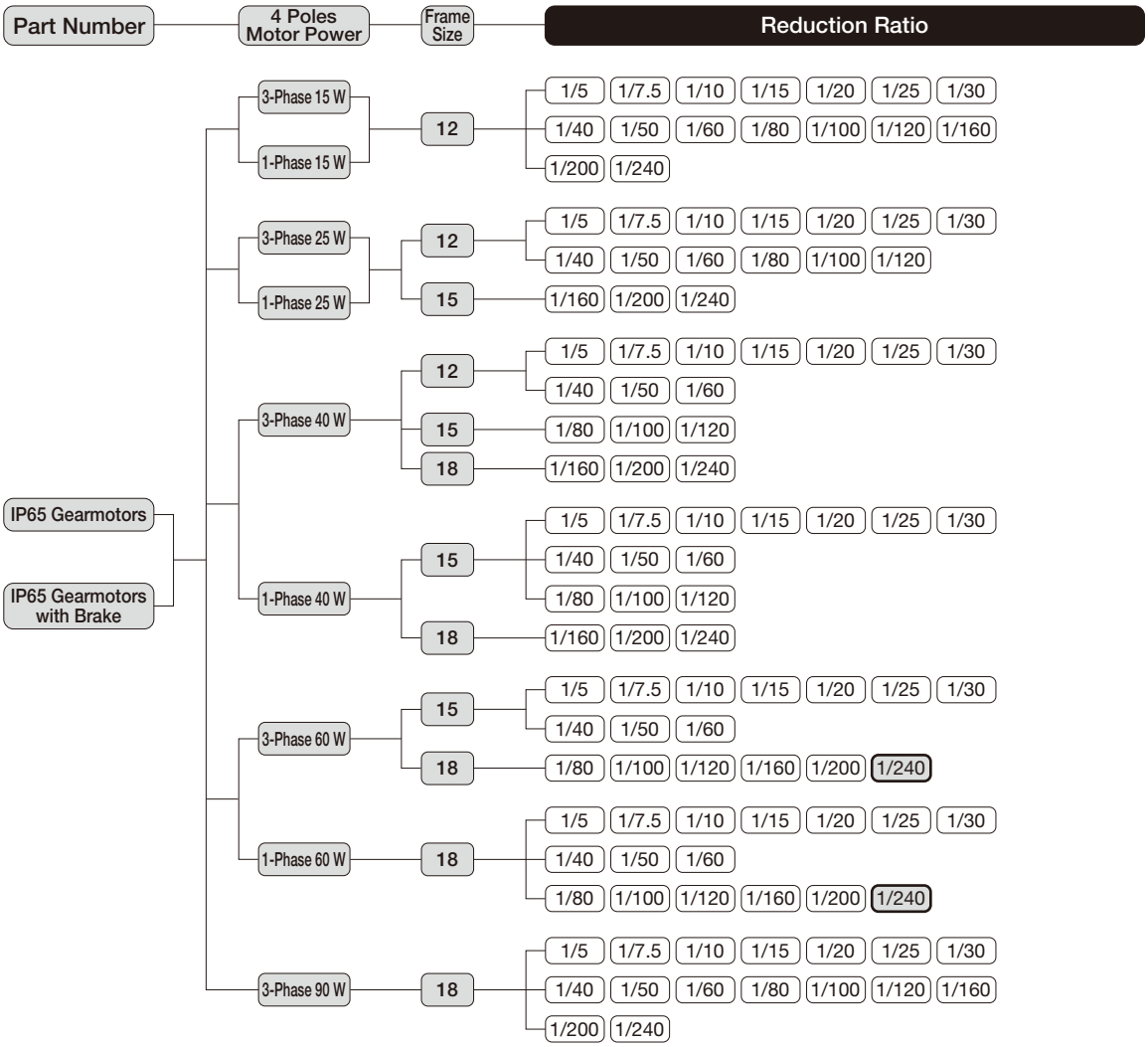

Note 1: Single-phase types are not available.
Note 2: ⬭ indicates a limited torque type. Please make sure to check the allowable output shaft torque in the performance table.

G3 Type IP65 Gearmotors/IP65 Gearmotors with Brake MID Series

Part Number	4 Poles Motor Power	Frame Size	Reduction Ratio
IP65 Gearmotors / IP65 Gearmotors with Brake	3-Phase 0.1 kW	18	1/5, 1/10, 1/15, 1/20, 1/25, 1/30, 1/40, 1/50
		22	1/60, 1/80, 1/100, 1/120, 1/160, 1/200
		28	1/300, 1/375, 1/450
		32	1/600, 1/750, **1/900**, **1/1200**
	3-Phase 0.2 kW	18	1/5, 1/10, 1/15, 1/20, 1/25
		22	1/30, 1/40, 1/50, 1/60, 1/80, **1/100**
		28	1/100, 1/120, 1/160, 1/200
		32	1/300, 1/375, 1/450
		40	1/600, **1/750**, **1/900**, **1/1200**
	3-Phase 0.4 kW	22	1/5, 1/10, 1/15, 1/20, 1/25
		28	1/30, 1/40, 1/50, 1/60, 1/80, **1/100**
		32	1/100, 1/120, 1/160, 1/200
		40	1/300, **1/375**, **1/450**
		50	**1/600**, **1/750**, **1/900**, **1/1200**
	3-Phase 0.75 kW	28	1/5, 1/10, 1/15, 1/20, 1/25
		32	1/30, 1/40, 1/50, 1/60, 1/80, **1/100**
		40	1/100, 1/120, 1/160, 1/200
		50	1/300, **1/375**, **1/450**
	(Note 2) 3-Phase 1.5 kW	32	1/5, 1/10, 1/15, 1/20, 1/25
		40	1/30, 1/40, 1/50, 1/60, 1/80, **1/100**
		50	1/100, 1/120, **1/160**, **1/200**
	(Note 2) 3-Phase 2.2 kW	40	1/5, 1/10, 1/15, 1/20, 1/25
		50	1/30, 1/40, 1/50, 1/60, 1/80, **1/100**

Note 1: The G3 Type is available in three types: Foot mount, Flange mount, and Small flange mount.
Please note that mounting type G3K is available only for frame sizes 18 to 32.
Note 2: IP65 gearmotors with a brake are not available with motor powers of 1.5 kW and 2.2 kW.
Note 3: ▭ indicates a limited torque type. Please make sure to check the allowable output shaft torque in the performance table.

GA Type IP65 Gearmotors/IP65 Gearmotors with Brake MID Series

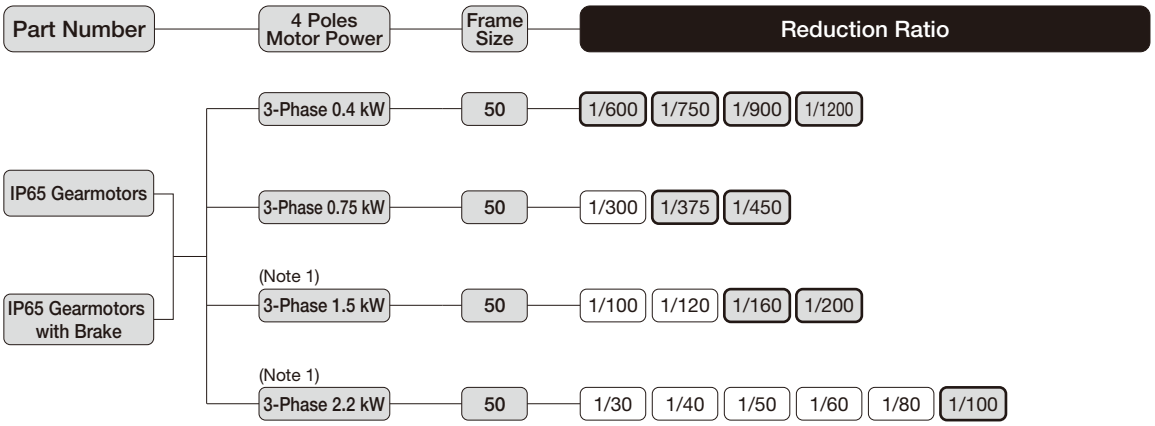

Note 1: IP65 gearmotors with a brake are not available with motor powers of 1.5 kW and 2.2 kW.
Note 2: ▭ indicates a limited torque type. Please make sure to check the allowable output shaft torque in the performance table.

G3 Type Gearmotors with Clutch/Brake MID Series

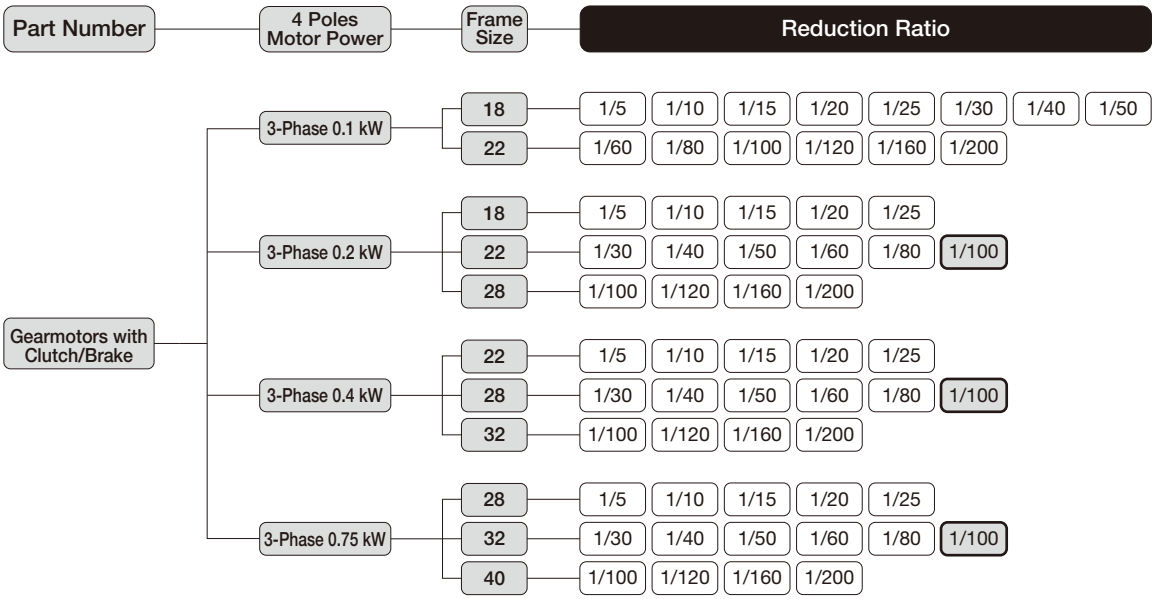

Note 1: The G3 Type is available in three types: Foot mount, Flange mount, and Small flange mount.
Please note that mounting type G3K is available only for frame sizes 18 to 32.
Note 2: ▭ indicates a limited torque type. Please make sure to check the allowable output shaft torque in the performance table.

G Type Speed Control Gearmotors MINI Series

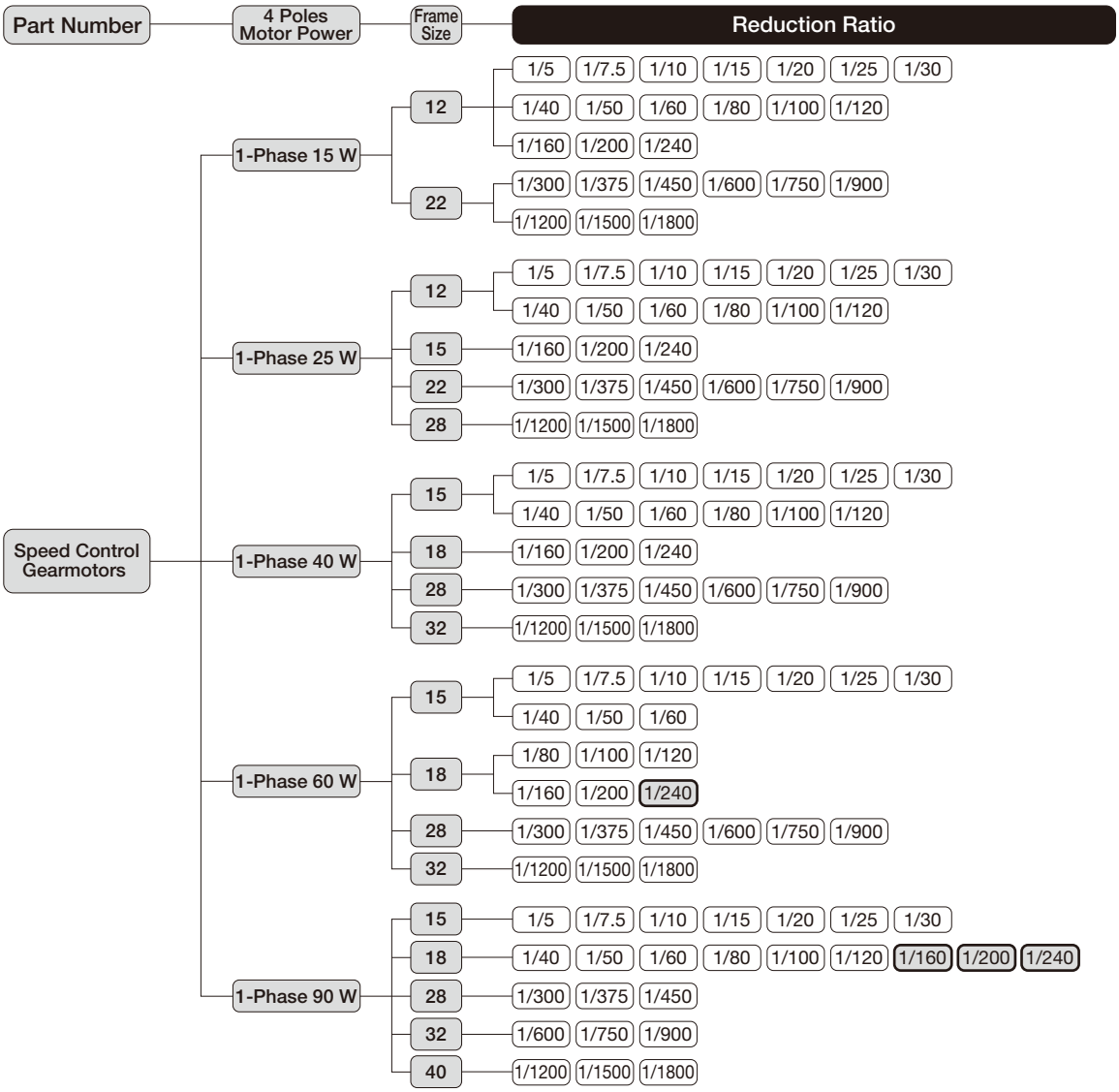

Note 1: Please note that mounting type GK is available only for frame sizes 22 to 32.
Note 2: ⬭ indicates a limited torque type. Please make sure to check the allowable output shaft torque in the performance table.

G3 Type Gearboxes (Double Shaft Type) MID Series

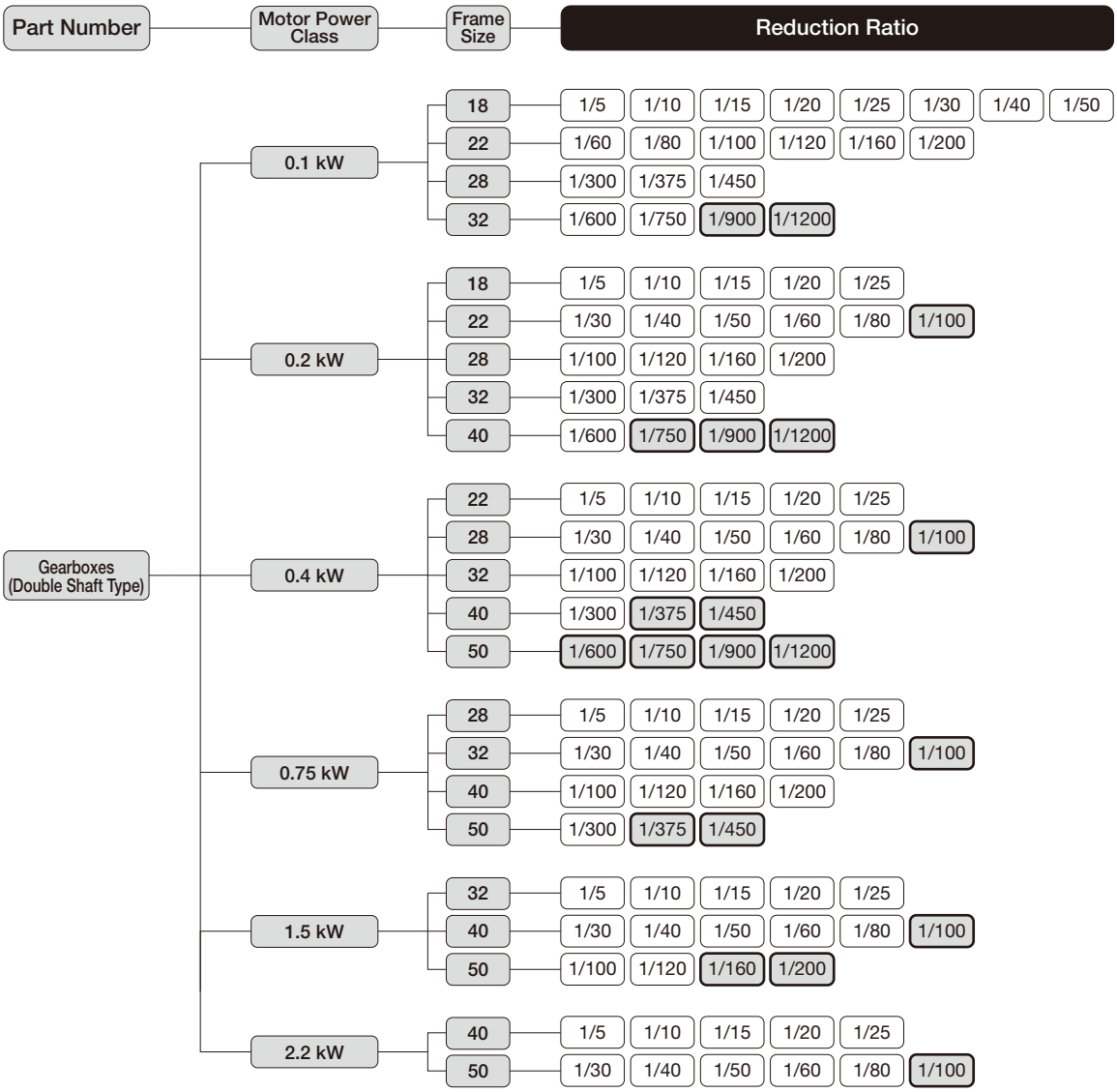

Note 1: The G3 Type is available in three types: Foot mount, Flange mount, and Small flange mount.
Please note that mounting type G3K is available only for frame sizes 18 to 32.
Note 2: ▭ indicates a limited torque type. Please make sure to check the allowable output shaft torque in the performance table.

GA Type Gearboxes (Double Shaft Type) MID Series

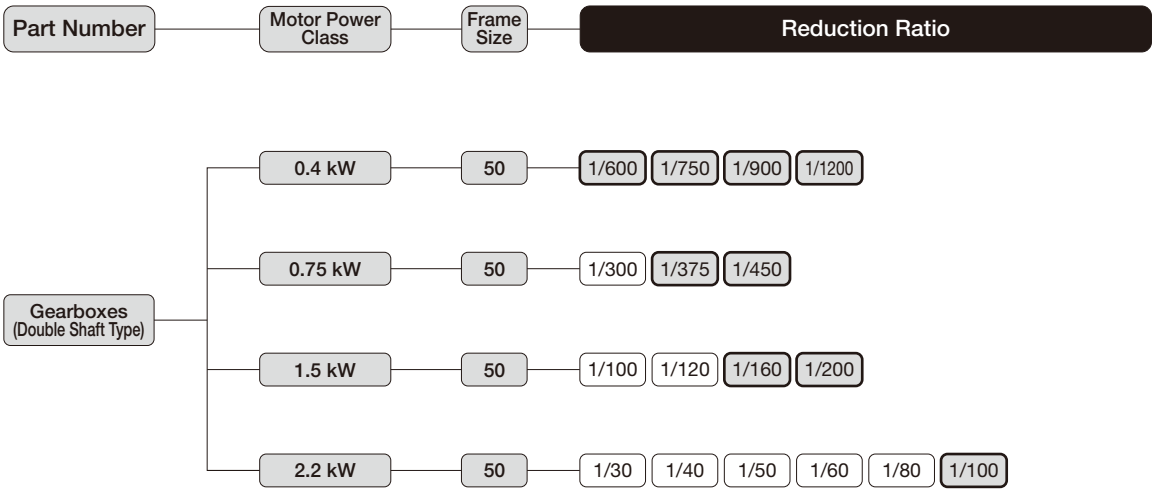

Note 1: ▭ indicates a limited torque type. Please make sure to check the allowable output shaft torque in the performance table.

G3 Type S-Type Gearboxes MID Series

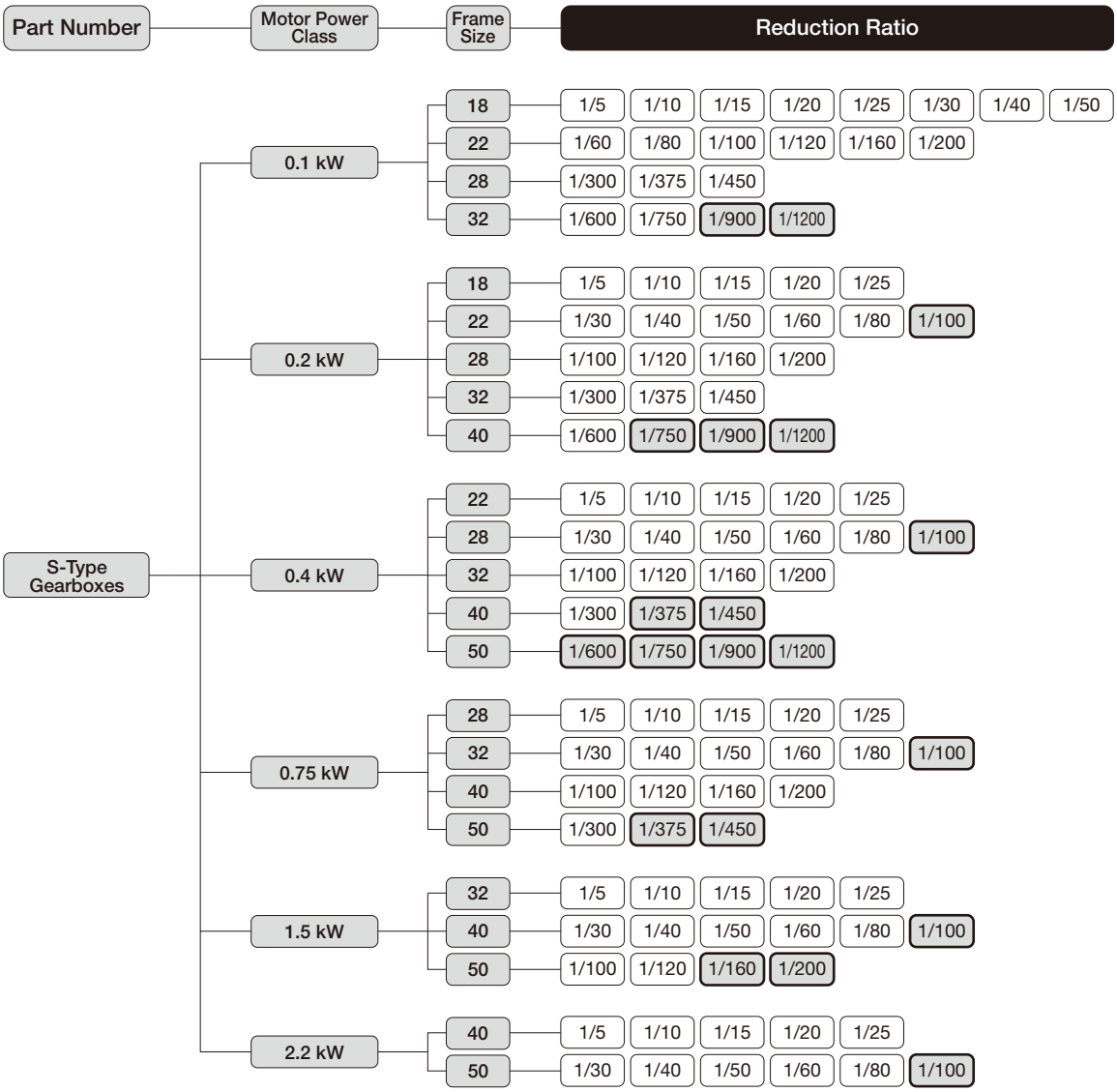

Note 1: The G3 Type is available in three types: Foot mount, Flange mount, and Small flange mount.
Please note that mounting type G3K is available only for frame sizes 18 to 32.
Note 2: ▭ indicates a limited torque type. Please make sure to check the allowable output shaft torque in the performance table.

GA Type S-Type Gearboxes MID Series

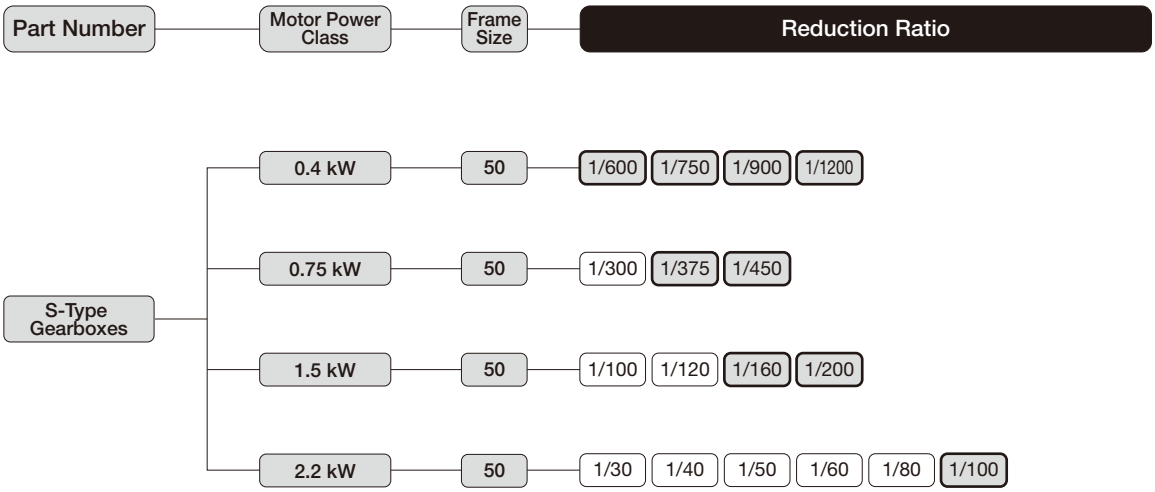

Note 1: ▭ indicates a limited torque type. Please make sure to check the allowable output shaft torque in the performance table.

MEMO

1. Gearmotors Gearmotors with Brake

1-1. Motor Characteristics Table

G Type 3-Phase Standard Voltage

Series	Power (W)	Voltage (V)	Frequency (Hz)	Frame Size	Rated Current (A)	Rated Speed (r/min)	Startup Current (A)
MINI	15	200/200/220	50/60/60	12	0.14/0.13/0.13	1350/1550/1600	0.30/0.28/0.31
				22	0.14/0.13/0.13	1350/1550/1600	0.30/0.28/0.31
	25	200/200/220	50/60/60	12	0.21/0.19/0.19	1350/1550/1600	0.44/0.42/0.46
				15	0.18/0.17/0.17	1350/1550/1600	0.43/0.41/0.46
				22	0.21/0.19/0.19	1350/1550/1600	0.44/0.42/0.46
				28	0.18/0.17/0.17	1350/1550/1600	0.43/0.41/0.46
	40	200/200/220	50/60/60	12	0.29/0.27/0.27	1350/1550/1600	0.67/0.62/0.68
				15	0.27/0.26/0.26	1350/1550/1550	0.73/0.69/0.76
				18	0.21/0.21/0.21	1350/1550/1600	0.66/0.64/0.70
				22	0.29/0.27/0.27	1350/1550/1600	0.67/0.62/0.68
				28	0.27/0.26/0.26	1350/1550/1550	0.73/0.69/0.76
				32	0.27/0.26/0.26	1350/1550/1550	0.73/0.69/0.76
	60	200/200/220	50/60/60	12	0.42/0.39/0.39	1350/1550/1550	0.94/0.86/1.00
				15	0.40/0.36/0.36	1350/1550/1600	1.04/0.97/1.07
				18	0.33/0.33/0.33	1350/1550/1600	1.06/1.01/1.11
				22	0.42/0.39/0.39	1350/1550/1550	0.94/0.86/1.00
				28	0.40/0.36/0.36	1350/1550/1600	1.04/0.97/1.07
				32	0.40/0.36/0.36	1350/1550/1600	1.04/0.97/1.07
	90	200/200/220	50/60/60	15	0.51/0.48/0.48	1350/1550/1550	1.42/1.36/1.49
				18	0.47/0.47/0.47	1350/1550/1600	1.59/1.51/1.66
				28	0.51/0.48/0.48	1350/1550/1550	1.42/1.36/1.49
				32	0.51/0.48/0.48	1350/1550/1550	1.42/1.36/1.49
				40	0.47/0.47/0.47	1350/1550/1600	1.59/1.51/1.66

G Type 3-Phase High Voltage (400 V Class)

Series	Power (W)	Voltage (V)	Frequency (Hz)	Frame Size	Rated Current (A)	Rated Speed (r/min)	Startup Current (A)
MINI	15	380/400/400/440	50/50/60/60	12	0.11/0.12/0.10/0.11	1400/1400/1700/1700	0.26/0.28/0.26/0.29
				22	0.11/0.12/0.10/0.11	1400/1400/1700/1700	0.26/0.28/0.26/0.29
	25	380/400/400/440	50/50/60/60	12	0.11/0.12/0.11/0.12	1350/1400/1600/1650	0.26/0.28/0.26/0.29
				15	0.09/0.09/0.09/0.09	1300/1350/1550/1600	0.20/0.21/0.20/0.22
				22	0.11/0.12/0.11/0.12	1350/1400/1600/1650	0.26/0.28/0.26/0.29
				28	0.09/0.09/0.09/0.09	1300/1350/1550/1600	0.20/0.21/0.20/0.22
	40	380/400/400/440	50/50/60/60	12	0.14/0.14/0.14/0.14	1300/1350/1550/1600	0.30/0.32/0.30/0.33
				15	0.13/0.14/0.13/0.14	1300/1350/1550/1600	0.33/0.35/0.33/0.37
				18	0.10/0.10/0.10/0.10	1350/1400/1600/1650	0.31/0.34/0.32/0.35
				22	0.14/0.14/0.14/0.14	1300/1350/1550/1600	0.30/0.32/0.30/0.33
				28	0.13/0.14/0.13/0.14	1300/1350/1550/1600	0.33/0.35/0.33/0.37
				32	0.13/0.14/0.13/0.14	1300/1350/1550/1600	0.33/0.35/0.33/0.37
	60	380/400/400/440	50/50/60/60	15	0.17/0.17/0.17/0.17	1300/1350/1550/1600	0.43/0.45/0.43/0.47
				18	0.16/0.16/0.16/0.16	1350/1400/1600/1650	0.48/0.51/0.49/0.54
				22	0.20/0.20/0.20/0.20	1250/1300/1500/1550	0.38/0.40/0.38/0.41
				28	0.17/0.17/0.17/0.17	1300/1350/1550/1600	0.43/0.45/0.43/0.47
				32	0.17/0.17/0.17/0.17	1300/1350/1550/1600	0.43/0.45/0.43/0.47
	90	380/400/400/440	50/50/60/60	15	0.26/0.26/0.26/0.26	1300/1350/1550/1600	0.70/0.74/0.69/0.77
				18	0.23/0.23/0.24/0.24	1350/1350/1600/1650	0.73/0.78/0.74/0.81
				28	0.26/0.26/0.26/0.26	1300/1350/1550/1600	0.70/0.74/0.69/0.77
				32	0.26/0.26/0.26/0.26	1300/1350/1550/1600	0.70/0.74/0.69/0.77
				40	0.23/0.23/0.24/0.24	1350/1350/1600/1650	0.73/0.78/0.74/0.81

The rated current in the motor characteristics table is the current data for the motor operating without a gearbox.
With regard to gearmotors with a brake, it is necessary to consider the current value flowing through the brake as needed.
For more details, please contact your nearest Sales Office or the CS Center.

G Type 1-Phase Standard Voltage

Series	Power (W)	Voltage (V)	Frequency (Hz)	Frame Size	Rated Current (A)	Rated Speed (r/min)	Startup Current (A)	Capacitor (μF)
MINI	15	100/100	50/60	12	0.39/0.35	1350/1650	0.72/0.67	5
				22	0.39/0.35	1350/1650	0.72/0.67	5
	25	100/100	50/60	12	0.48/0.48	1350/1600	0.86/0.80	7
				15	0.44/0.45	1350/1650	1.00/0.92	7
				22	0.48/0.48	1350/1600	0.86/0.80	7
				28	0.44/0.45	1350/1650	1.00/0.92	7
	40	100/100	50/60	12	0.67/0.80	1400/1650	1.26/1.23	12
				15	0.61/0.66	1350/1650	1.43/1.36	10
				18	0.63/0.64	1400/1650	2.16/2.00	10
				22	0.67/0.80	1400/1650	1.26/1.23	12
				28	0.61/0.66	1350/1650	1.43/1.36	10
				32	0.61/0.66	1350/1650	1.43/1.36	10
	60	100/100	50/60	15	0.90/1.00	1350/1600	2.11/1.98	15
				18	0.90/1.00	1400/1650	2.55/2.37	15
				22	0.90/1.10	1300/1500	1.33/1.34	15
				28	0.90/1.00	1350/1600	2.11/1.98	15
				32	0.90/1.00	1350/1600	2.11/1.98	15
	90	100/100	50/60	15	1.30/1.40	1350/1600	2.89/2.68	20
				18	1.20/1.40	1350/1600	3.27/3.04	20
				28	1.30/1.40	1350/1600	2.89/2.68	20
				32	1.30/1.40	1350/1600	2.89/2.68	20
				40	1.20/1.40	1350/1600	3.27/3.04	20

G Type 1-Phase High Voltage (200 V Class)

Series	Power (W)	Voltage (V)	Frequency (Hz)	Frame Size	Rated Current (A)	Rated Speed (r/min)	Startup Current (A)	Capacitor (μF)
MINI	15	200/200	50/60	12	0.21/0.19	1350/1650	0.35/0.33	1.2
				22	0.21/0.19	1350/1650	0.35/0.33	1.2
	25	200/200	50/60	12	0.26/0.25	1350/1600	0.47/0.44	1.7
				15	0.23/0.24	1350/1650	0.46/0.45	1.7
				22	0.26/0.25	1350/1600	0.47/0.44	1.7
				28	0.23/0.24	1350/1650	0.46/0.45	1.7
	40	200/200	50/60	12	0.34/0.33	1350/1600	0.66/0.60	2.5
				15	0.29/0.34	1350/1600	0.64/0.61	2.5
				18	0.31/0.32	1400/1650	0.98/0.92	2.5
				22	0.34/0.33	1350/1600	0.66/0.60	2.5
				28	0.29/0.34	1350/1600	0.64/0.61	2.5
				32	0.29/0.34	1350/1600	0.64/0.61	2.5
	60	200/200	50/60	15	0.45/0.48	1350/1600	1.06/1.00	3.5
				18	0.42/0.45	1400/1650	1.29/1.22	3.5
				22	0.43/0.50	1300/1500	0.67/0.64	3.5
				28	0.45/0.48	1350/1600	1.06/1.00	3.5
				32	0.45/0.48	1350/1600	1.06/1.00	3.5
	90	200/200	50/60	15	0.65/0.66	1350/1600	1.44/1.35	5
				18	0.59/0.65	1400/1650	1.67/1.58	5
				28	0.65/0.66	1350/1600	1.44/1.35	5
				32	0.65/0.66	1350/1600	1.44/1.35	5
				40	0.59/0.65	1400/1650	1.67/1.58	5

The rated current in the motor characteristics table is the current data for the motor operating without a gearbox.
With regard to gearmotors with a brake, it is necessary to consider the current value flowing through the brake as needed.
For more details, please contact your nearest Sales Office or the CS Center.

G Type 3-Phase Standard Voltage/High Voltage (400 V Class)/Special Voltage

Series	Power	Power Supply/ Certification Codes	Voltage (V)	Frequency (Hz)	Rated Current (A)	Startup Current (A)	Rated Speed (r/min)
MID	0.1kW	NN	200/200/220	50/60/60	0.61/0.54/0.54	2.39/2.27/2.52	1410/1690/1710
		WN	380/400/400/440	50/50/60/60	0.31/0.31/0.28/0.28	1.12/1.18/1.12/1.22	1400/1410/1690/1720
		KN	220/380	60/60	0.52/0.30	1.90/1.10	1680/1680
		CN	220/230/380	50/50/50	0.55/0.54/0.31	1.94/2.03/1.12	1400/1410/1400
		DN	220/220/380/380	50/60/50/60	0.55/0.52/0.31/0.30	1.94/1.90/1.12/1.10	1400/1680/1400/1680
		EN	415/440/480	50/50/60	0.30/0.29/0.26	1.06/1.12/1.17	1390/1420/1720
		AN	208/230/460/400	60/60/60/50	0.54/0.57/0.29/0.31	2.35/2.62/1.26/1.21	1690/1730/1730/1410
		MA	575	60	0.20	0.87	1700
	0.2kW IE2	NN	200/200/220	50/60/60	1.1/1.0/1.0	4.70/4.35/4.85	1400/1680/1700
		WN	380/400/400/440	50/50/60/60	0.56/0.56/0.50/0.50	2.29/2.38/2.29/2.48	1390/1400/1680/1710
		KN	220/380	60/60	0.93/0.52	3.70/2.20	1680/1680
		CN	220/230/380	50/50/50	0.99/0.98/0.56	3.97/4.15/2.29	1400/1410/1390
		DN	220/220/380/380	50/60/50/60	0.99/0.93/0.56/0.52	3.97/3.70/2.29/2.20	1400/1680/1390/1680
		EN	415/440/480	50/50/60	0.50/0.50/0.45	1.75/1.86/2.00	1370/1400/1700
		AN	208/230/460/400	60/60/60/50	1.0/1.0/0.50/0.56	4.78/5.16/2.56/2.44	1680/1720/1720/1400
		MA	575	60	0.40	1.78	1710
	0.4kW IE2	NN	200/200/220	50/60/60	2.1/1.8/1.8	9.60/8.54/9.21	1400/1680/1700
		WN	380/400/400/440	50/50/60/60	1.0/1.0/0.9/0.9	4.43/4.64/4.24/4.85	1390/1400/1680/1710
		KN	220/380	60/60	1.7/1.0	7.10/4.09	1670/1670
		CN	220/230/380	50/50/50	1.8/1.8/1.0	7.63/8.04/4.43	1390/1400/1390
		DN	220/220/380/380	50/60/50/60	1.8/1.7/1.0/1.0	7.63/7.10/4.43/4.09	1390/1670/1390/1670
		EN	415/440/480	50/50/60	0.96/0.95/0.82	4.45/4.56/4.52	1390/1410/1680
		AN	208/230/460/400	60/60/60/50	1.8/1.8/0.9/1.0	9.21/9.82/5.06/4.62	1680/1720/1720/1400
		MA	575	60	0.68	3.94	1700
	0.75kW IE3	NN	200/200/220	50/60/60	3.5/3.2/3.1	21.8/19.0/21.1	1450/1740/1750
		WN	380/400/400/440	50/50/60/60	1.73/1.72/1.58/1.54	10.2/10.8/9.8/10.7	1440/1450/1740/1750
		KN	220/380	60/60	2.9/1.7	16.9/9.8	1740/1740
		CN	220/230/380	50/50/50	3.0/3.0/1.7	17.8/18.7/10.3	1450/1450/1440
		DN	220/220/380/380	50/60/50/60	3.1/2.9/1.8/1.7	19.3/16.9/11.2/9.8	1450/1740/1450/1740
		EN	415/440/480	50/50/60	1.54/1.52/1.36	8.6/9.3/9.0	1440/1450/1750
		UN	230/460/400	60/60/50	3.1/1.5/1.7	22.3/11.2/10.8	1760/1760/1450
		MA	575	60	1.16	7.2	1750
	1.5kW IE3	NN	200/200/220	50/60/60	6.7/6.1/5.9	45.6/40.3/45.1	1450/1740/1760
		WN	380/400/400/440	50/50/60/60	3.4/3.4/3.1/3.0	21.9/23.2/20.4/22.8	1450/1450/1750/1760
		KN	220/380	60/60	5.9/3.4	45.1/25.8	1760/1760
		CN	220/230/380	50/50/50	5.9/5.9/3.4	38.5/40.4/22.1	1450/1450/1450
		EN	415/440/480	50/50/60	3.1/3.1/2.8	20.8/22.2/21.2	1450/1460/1760
		UN	230/460/400	60/60/50	5.9/2.9/3.3	44.9/22.6/23.2	1760/1760/1450
		MA	575	60	2.2	17.0	1760
	2.2kW IE3	NN	200/200/220	50/60/60	9.3/8.6/8.2	70.3/56.9/63.7	1470/1760/1770
		WN	380/400/400/440	50/50/60/60	4.5/4.4/4.2/3.9	30.0/32.0/25.0/28.0	1440/1450/1740/1750
		KN	220/380	60/60	8.3/4.8	65.0/38.0	1770/1770
		CN	220/230/380	50/50/50	7.9/7.7/4.5	52.0/54.3/30.0	1460/1470/1440
		EN	415/440/480	50/50/60	4.3/4.3/3.8	33.1/35.5/29.8	1460/1470/1770
		UN	230/460/400	60/60/50	7.9/4.0/4.5	65.2/34.8/36.3	1770/1770/1470
		MA	575	60	3.3	24.4	1760

The rated current in the motor characteristics table is the current data for the motor operating without a gearbox.
With regard to gearmotors with a brake, it is necessary to consider the current value flowing through the brake as needed.
For more details, please contact your nearest Sales Office or the CS Center.

GA Type 3-Phase Standard Voltage/High Voltage (400 V Class)/Special Voltage

Series	Power	Power Supply/ Certification Codes	Voltage (V)	Frequency (Hz)	Rated Current (A)	Startup Current (A)	Rated Speed (r/min)
	0.4kW IE2	NN	200/200/220	50/60/60	2.1/1.8/1.8	9.60/8.54/9.21	1400/1680/1700
		WN	380/400/400/440	50/50/60/60	1.0/1.0/0.9/0.9	4.43/4.64/4.24/4.85	1390/1400/1680/1710
		KN	220/380	60/60	1.7/1.0	7.10/4.09	1670/1670
		CN	220/230/380	50/50/50	1.8/1.8/1.0	7.63/8.04/4.43	1390/1400/1390
		DN	220/220/380/380	50/60/50/60	1.8/1.7/1.0/1.0	7.63/7.10/4.43/4.09	1390/1670/1390/1670
		EN	415/440/480	50/50/60	0.96/0.95/0.82	4.45/4.56/4.52	1390/1410/1680
		AN	208/230/460/400	60/60/60/50	1.8/1.8/0.9/1.0	9.21/9.82/5.06/4.62	1680/1720/1720/1400
		MA	575	60	0.68	3.94	1700
	0.75kW IE3	NN	200/200/220	50/60/60	3.5/3.2/3.1	21.8/19.0/21.1	1450/1740/1750
		WN	380/400/400/440	50/50/60/60	1.73/1.72/1.58/1.54	10.2/10.8/9.8/10.7	1440/1450/1740/1750
		KN	220/380	60/60	2.9/1.7	16.9/9.8	1740/1740
		CN	220/230/380	50/50/50	3.0/3.0/1.7	17.8/18.7/10.3	1450/1450/1440
		DN	220/220/380/380	50/60/50/60	3.1/2.9/1.8/1.7	19.3/16.9/11.2/9.8	1450/1740/1450/1740
		EN	415/440/480	50/50/60	1.54/1.52/1.36	8.6/9.3/9.0	1440/1450/1750
		UN	230/460/400	60/60/50	3.1/1.5/1.7	22.3/11.2/10.8	1760/1760/1450
		MA	575	60	1.16	7.2	1750
	1.5kW IE3	NN	200/200/220	50/60/60	6.7/6.1/5.9	45.6/40.3/45.1	1450/1740/1760
		WN	380/400/400/440	50/50/60/60	3.4/3.4/3.1/3.0	21.9/23.2/20.4/22.8	1450/1450/1750/1760
		KN	220/380	60/60	5.9/3.4	45.1/25.8	1760/1760
		CN	220/230/380	50/50/50	5.9/5.9/3.4	38.5/40.4/22.1	1450/1450/1450
		EN	415/440/480	50/50/60	3.1/3.1/2.8	20.8/22.2/21.2	1450/1460/1760
		UN	230/460/400	60/60/50	5.9/2.9/3.3	44.9/22.6/23.2	1760/1760/1450
		MA	575	60	2.2	17.0	1760
	2.2kW IE3	NN	200/200/220	50/60/60	9.3/8.6/8.2	70.3/56.9/63.7	1470/1760/1770
		WN	380/400/400/440	50/50/60/60	4.5/4.4/4.2/3.9	30.0/32.0/25.0/28.0	1440/1450/1740/1750
		KN	220/380	60/60	8.3/4.8	65.0/38.0	1770/1770
		CN	220/230/380	50/50/50	7.9/7.7/4.5	52.0/54.3/30.0	1460/1470/1440
		EN	415/440/480	50/50/60	4.3/4.3/3.8	33.1/35.5/29.8	1460/1470/1770
		UN	230/460/400	60/60/50	7.9/4.0/4.5	65.2/34.8/36.3	1770/1770/1470
		MA	575	60	3.3	24.4	1760

The rated current in the motor characteristics table is the current data for the motor operating without a gearbox.
With regard to gearmotors with a brake, it is necessary to consider the current value flowing through the brake as needed.
For more details, please contact your nearest Sales Office or the CS Center.

G3 Type 1-Phase Standard Voltage

Series	Power	Startup Method	Voltage (V)	Frequency (Hz)	Rated Current (A)	Startup Current (A)	Rated Speed (r/min)	Startup Torque (%)	Breakdown Torque (%)
MID	0.1 kW	Capacitor Start	100/100	50/60	2.7/2.4	10.5/10.5	1420/1710	220/204	188/184
	0.2 kW	Capacitor Start	100/100	50/60	5.1/4.5	20.0/20.0	1420/1700	276/294	194/187
	0.4 kW	Capacitor Start	100/100	50/60	8.7/7.9	32.0/32.0	1440/1730	210/205	189/178

The rated current in the motor characteristics table is the current data for the motor operating without a gearbox.
With regard to gearmotors with a brake, it is necessary to consider the current value flowing through the brake as needed.
For more details, please contact your nearest Sales Office or the CS Center.

G3 Type 1-Phase High Voltage (200 V Class)

Series	Power	Startup Method	Voltage (V)	Frequency (Hz)	Rated Current (A)	Startup Current (A)	Rated Speed (r/min)	Startup Torque (%)	Breakdown Torque (%)
MID	0.1 kW	Capacitor Start	200/200	50/60	1.3/1.2	5.4/5.4	1420/1710	222/200	194/182
	0.2 kW	Capacitor Start	200/200	50/60	2.5/2.2	10.0/10.0	1420/1700	254/250	203/205
	0.4 kW	Capacitor Start	200/200	50/60	4.3/3.9	19.0/18.9	1440/1730	181/190	240/217

The rated current in the motor characteristics table is the current data for the motor operating without a gearbox.
With regard to gearmotors with a brake, it is necessary to consider the current value flowing through the brake as needed.
For more details, please contact your nearest Sales Office or the CS Center.

GA Type 1-Phase Standard Voltage

Series	Power	Startup Method	Voltage (V)	Frequency (Hz)	Rated Current (A)	Startup Current (A)	Rated Speed (r/min)	Startup Torque (%)	Breakdown Torque (%)
MID	0.4 kW	Capacitor Start	100/100	50/60	8.7/7.9	32.0/32.0	1440/1730	210/205	189/178

The rated current in the motor characteristics table is the current data for the motor operating without a gearbox.
With regard to gearmotors with a brake, it is necessary to consider the current value flowing through the brake as needed.
For more details, please contact your nearest Sales Office or the CS Center.

GA Type 1-Phase High Voltage (200 V Class)

Series	Power	Startup Method	Voltage (V)	Frequency (Hz)	Rated Current (A)	Startup Current (A)	Rated Speed (r/min)	Startup Torque (%)	Breakdown Torque (%)
MID	0.4 kW	Capacitor Start	200/200	50/60	4.3/3.9	19.0/18.9	1440/1730	181/190	240/217

The rated current in the motor characteristics table is the current data for the motor operating without a gearbox.
With regard to gearmotors with a brake, it is necessary to consider the current value flowing through the brake as needed.
For more details, please contact your nearest Sales Office or the CS Center.

1-2. Performance Table

G Type Gearmotors/Gearmotors with Brake

[Notes]
- The values in parentheses ( ) in the drawings are the indications for gearmotors with brake.
- The output shaft speed is the value relative to the synchronous speed of the motor and the reduction ratio.
- Allowable output shaft O.H.L. is the value at the middle of the output shaft.
- In the performance table, the reduction ratio in ▭ indicates that when the connection is made as shown on page 546 (CW), the direction of rotation is clockwise in the case of a three-phase motor or counterclockwise in the case of a single-phase motor when viewed from the output shaft side. (Refer to the figure on the right)
- The "*" mark indicates a limited torque type. Please make sure to check the allowable output shaft torque in the performance table.

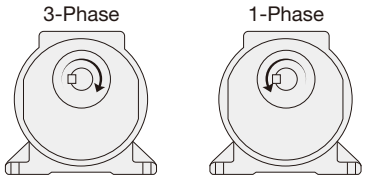

Series	Motor Power	Frame Size	Reduction Ratio	Actual Reduction Ratio	Output Shaft Speed r/min 50 Hz	Output Shaft Speed r/min 60 Hz	Allowable Output Shaft Torque N·m	Allowable Output Shaft O.H.L. N	Drawings Foot Mount	Drawings Flange Mount	Drawings Small Flange Mount
MINI	15 W	12	1/5	1/5	300	360	0.29	98	P.83	P.104	-
			1/7.5	1/7.5	200	240	0.49	196			
			1/10	1/10	150	180	0.69	245			
			1/15	1/15	100	120	0.98	343			
			1/20	1/20	75	90	1.27	441			
			1/25	1/25	60	72	1.67	490			
			1/30	1/29	50	60	1.96	539			
			1/40	1/40	37.5	45	2.65	588			
			1/50	1/50	30	36	3.33	637			
			1/60	1/58	25	30	3.92	686			
			1/80	1/80	18.8	22.5	5.00	735			
			1/100	1/100	15	18	6.27	735			
			1/120	1/120	12.5	15	7.45	784			
			1/160	1/160	9.4	11.2	9.80	784			
			1/200	1/200	7.5	9	12.7	784			
			1/240	1/232	6.3	7.5	14.7	784			
		22	1/300	91/27000	5	6	16.7	1760	P.88	P.109	P.124
			1/375	11/4050	4	4.8	20.6	1760			
			1/450	637/297000	3.3	4	25.5	1760			
			1/600	91/54000	2.5	3	33.3	1760			
			1/750	11/8100	2	2.4	42.1	1760			
			1/900	637/594000	1.7	2	50.0	1760			
			1/1200	91/104400	1.3	1.5	66.6	1760			
			1/1500	11/15660	1	1.2	83.3	1760			
			1/1800	637/1148400	0.8	1	98.0	1760			
	25 W	12	1/5	1/5	300	360	0.59	98	P.83	P.104	-
			1/7.5	1/7.5	200	240	0.78	196			
			1/10	1/10	150	180	1.08	245			
			1/15	1/15	100	120	1.67	343			
			1/20	1/20	75	90	2.25	441			
			1/25	1/25	60	72	2.74	490			
			1/30	1/29	50	60	3.33	539			
			1/40	1/40	37.5	45	4.41	588			
			1/50	1/50	30	36	5.49	637			
			1/60	1/58	25	30	6.66	686			
			1/80	1/80	18.8	22.5	8.43	735			
			1/100	1/100	15	18	10.8	735			
			1/120	1/120	12.5	15	12.7	784			
		15	1/160	1/160	9.4	11.2	16.7	1080	P.84	P.105	-
			1/200	1/200	7.5	9	20.6	1080			
			1/240	1/232	6.3	7.5	25.5	1080			
		22	1/300	91/27000	5	6	28.4	1760	P.88	P.109	P.124
			1/375	11/4050	4	4.8	35.3	1760			
			1/450	637/297000	3.3	4	42.1	1760			
			1/600	91/54000	2.5	3	55.9	1760			
			1/750	11/8100	2	2.4	69.6	1760			
			1/900	637/594000	1.7	2	84.3	1760			
		28	1/1200	221/249690	1.3	1.5	108	2740	P.91	P.112	P.127
			1/1500	187/261870	1	1.2	137	2740			
			1/1800	169/285360	0.8	1	167	2740			

Series	Motor Power	Frame Size	Reduction Ratio	Actual Reduction Ratio	Output Shaft Speed r/min 50 Hz	Output Shaft Speed r/min 60 Hz	Allowable Output Shaft Torque N·m	Allowable Output Shaft O.H.L. N	Drawings Foot Mount	Drawings Flange Mount	Drawings Small Flange Mount
MINI	40 W	12	1/5	1/5	300	360	0.88	98	P.83	P.104	-
			1/7.5	1/7.5	200	240	1.37	196			
			1/10	1/10	150	180	1.76	245			
			1/15	1/15	100	120	2.65	343			
			1/20	1/20	75	90	3.53	441			
			1/25	1/25	60	72	4.41	490			
			1/30	1/29	50	60	5.29	539			
			1/40	1/40	37.5	45	7.06	588			
			1/50	1/50	30	36	8.82	637			
			1/60	1/58	25	30	10.8	686			
		15	1/80	1/80	18.8	22.5	13.7	980	P.84	P.105	-
			1/100	1/100	15	18	16.7	980			
			1/120	1/120	12.5	15	20.6	1080			
		18	1/160	1/160	9.4	11.2	26.5	1370	P.85	P.106	-
			1/200	1/200	7.5	9	33.3	1370			
			1/240	1/240	6.3	7.5	40.2	1370			
		22	1/300	91/27000	5	6	45.1	1760	P.88	P.109	P.124
			1/375	11/4050	4	4.8	55.9	1760			
			1/450	637/297000	3.3	4	67.6	1760			
		28	1/600	221/129150	2.5	3	90.2	2740	P.91	P.112	P.127
			1/750	187/135450	2	2.4	118	2740			
			1/900	169/147600	1.7	2	137	2740			
		32	1/1200	13/14964	1.3	1.5	176	5100	P.94	P.115	P.130
			1/1500	11/15660	1	1.2	225	5100			
			1/1800	13/22446	0.8	1	274	5100			
	60 W	12 (Note 1)	1/5	1/5	300	360	1.37	98	P.83	P.104	-
			1/7.5	1/7.5	200	240	2.06	196			
			1/10	1/10	150	180	2.74	245			
			1/15	1/15	100	120	4.12	343			
			1/20	1/20	75	90	5.49	441			
			1/25	1/25	60	72	6.96	490			
			1/30	1/29	50	60	8.33	539			
		15 (Note 1)	1/5	1/5	300	360	1.37	98	P.84	P.105	-
			1/7.5	1/7.5	200	240	2.06	196			
			1/10	1/10	150	180	2.74	245			
			1/15	1/15	100	120	4.12	343			
			1/20	1/20	75	90	5.49	441			
			1/25	1/25	60	72	6.96	490			
			1/30	1/29	50	60	8.33	539			
		15	1/40	1/40	37.5	45	10.8	784			
			1/50	1/50	30	36	13.7	882			
			1/60	1/58	25	30	16.7	882			
		18	1/80	1/80	18.8	22.5	20.6	1270	P.85	P.106	-
			1/100	1/100	15	18	26.5	1270			
			1/120	1/120	12.5	15	31.4	1370			
			1/160	1/160	9.4	11.2	42.1	1370			
			1/200	1/200	7.5	9	52.9	1370			
			* 1/240	1/240	6.3	7.5	53.9	1370			
		22	1/300	91/27000	5	6	70.6	1760	P.88	P.109	P.124
			1/375	11/4050	4	4.8	88.2	1760			
			1/450	637/297000	3.3	4	108	1760			
		28	1/600	221/129150	2.5	3	137	2740	P.91	P.112	P.127
			1/750	187/135450	2	2.4	176	2740			
			1/900	169/147600	1.7	2	216	2740			
		32	1/1200	13/14964	1.3	1.5	284	5100	P.94	P.115	P.130
			1/1500	11/15660	1	1.2	353	5100			
			1/1800	13/22446	0.8	1	421	5100			

Note 1: Please note that with regard to reduction ratios of 1/5 to 1/30 of 60 W gearmotors, the frame size for Three-phase standard voltages (200 V class) is 12, but the frame size for Three-phase high voltage (400 V class) and Single-phase voltages is 15.

Series	Motor Power	Frame Size	Reduction Ratio	Actual Reduction Ratio	Output Shaft Speed r/min		Allowable Output Shaft Torque	Allowable Output Shaft O.H.L.	Drawings		
					50 Hz	60 Hz	N·m	N	Foot Mount	Flange Mount	Small Flange Mount
MINI	90 W	15	1/5	1/5	300	360	2.06	147	P.84	P.105	-
			1/7.5	1/7.5	200	240	3.14	245			
			1/10	1/10	150	180	4.12	343			
			1/15	1/15	100	120	6.17	441			
			1/20	1/20	75	90	8.33	539			
			1/25	1/25	60	72	10.8	588			
			1/30	1/29	50	60	12.7	686			
		18	1/40	1/40	37.5	45	16.7	1080	P.85	P.106	-
			1/50	1/50	30	36	20.6	1180			
			1/60	1/60	25	30	24.5	1180			
			1/80	1/80	18.8	22.5	31.4	1270			
			1/100	1/100	15	18	39.2	1270			
			1/120	1/120	12.5	15	47.0	1370			
			* 1/160	1/160	9.4	11.2	53.9	1370			
			* 1/200	1/200	7.5	9	53.9	1370			
			* 1/240	1/240	6.3	7.5	53.9	1370			
		28	1/300	221/64575	5	6	108	2740	P.91	P.112	P.127
			1/375	187/67725	4	4.8	137	2740			
			1/450	169/73800	3.3	4	157	2740			
		32	1/600	13/7740	2.5	3	216	5100	P.94	P.115	P.130
			1/750	11/8100	2	2.4	265	5100			
			1/900	13/11610	1.7	2	314	5100			
		40	1/1200	13/14964	1.3	1.5	421	7060	P.97	P.118	-
			1/1500	11/15660	1	1.2	529	7060			
			1/1800	13/22443	0.8	1	637	7060			

Note 1: Please be sure to read the notes on page 73.

G3 Type Gearmotors/Gearmotors with Brake

[Notes]
- The values in parentheses ( ) in the drawings are the indications for gearmotors with brake.
- The output shaft speed is the value relative to the synchronous speed of the motor and the reduction ratio.
- ▭ in the performance table indicates that the shaft rotates clockwise when viewed from the output shaft side when the connection is made as shown on page 547 (CW). (Refer to the figure on the right)
- Allowable output shaft O.H.L. is the value at the middle of the output shaft.
- The "*" mark indicates a limited torque type. Please make sure to check the allowable output shaft torque in the performance table.

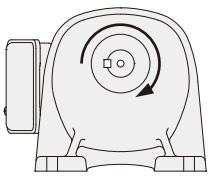

Series	Motor Power	Frame Size	Reduction Ratio	Actual Reduction Ratio	Output Shaft Speed r/min		Allowable Output Shaft Torque N·m		Allowable Output Shaft O.H.L.	Drawings		
					50 Hz	60 Hz	50 Hz	60 Hz	N	Foot Mount	Flange Mount	Small Flange Mount
MID	3-Phase 0.1 kW	18	1/5	33/164	300	360	3	2.5	770	P.86	P.107	P.122
			1/10	77/779	150	180	6.1	5	1140			
			1/15	119/1804	100	120	9.1	7.5	1270			
			1/20	49/984	75	90	12	9.8	1530			
			1/25	28/697	60	72	15	12.7	1650			
			1/30	35/1066	50	60	19	14.7	1780			
			1/40	35/1404	37.5	45	24	19.6	1910			
			1/50	7/351	30	36	29	24.5	2040			
		22	1/60	11/684	25	30	35	29.4	2800	P.89	P.110	P.125
			1/80	21/1634	18.8	22.5	47	39.2	3180			
			1/100	7/684	15	18	59	49	3180			
			1/120	147/17974	12.5	15	71	58.8	3180			
			1/160	21/3268	9.4	11.2	94	78.4	3180			
			1/200	21/4085	7.5	9	117	98	3180			
		28	1/300	221/65190	5	6	157	130	3430	P.92	P.113	P.128
			1/375	187/68370	4	4.8	196	163	3430			
			1/450	1183/521520	3.3	4	235	196	3430			
		32	1/600	147/88192	2.5	3	313	261	5880	P.95	P.116	P.131
			1/750	49/36464	2	2.4	391	326	5880			
			* 1/900	62/57063	1.7	2	431	391	5880			
			* 1/1200	46/55195	1.3	1.5	431	431	5880			
	3-Phase 0.2 kW	18	1/5	33/164	300	360	6.1	5	770	P.86	P.107	P.122
			1/10	77/779	150	180	11.8	9.8	1140			
			1/15	119/1804	100	120	18.6	14.7	1270			
			1/20	49/984	75	90	24.5	20.6	1450			
			1/25	28/697	60	72	30.4	25.5	1550			
		22	1/30	7/216	50	60	36.3	30.4	2280	P.89	P.110	P.125
			1/40	91/3600	37.5	45	47	39.2	2410			
			1/50	11/540	30	36	58.8	49	2540			
			1/60	637/39600	25	30	70.6	58.8	2800			
			1/80	91/7200	18.8	22.5	94.1	78.4	3000			
			* 1/100	11/1080	15	18	97	80.4	3180			
		28	1/100	13/1353	15	18	117	98	3690	P.92	P.113	P.128
			1/120	91/11000	12.5	15	140	117	4320			
			1/160	1/165	9.4	11.2	187	156	4450			
			1/200	7/1375	7.5	9	234	195	4450			
		32	1/300	91/27348	5	6	313	261	5880	P.95	P.116	P.131
			1/375	77/28620	4	4.8	391	326	5880			
			1/450	91/41022	3.3	4	431	391	5880			
		40	1/600	9/5300	2.5	3	626	521	7060	P.98	P.119	-
			* 1/750	62/46427	2	2.4	764	653	7060			
			* 1/900	23/21259	1.7	2	764	764	7060			
			* 1/1200	9/10600	1.3	1.5	764	764	7060			

Series	Motor Power	Frame Size	Reduction Ratio	Actual Reduction Ratio	Output Shaft Speed		Allowable Output Shaft Torque		Allowable Output Shaft O.H.L.	Drawings		
					r/min		N·m			Foot Mount	Flange Mount	Small Flange Mount
					50 Hz	60 Hz	50 Hz	60 Hz	N			
MID	3-Phase 0.4 kW	22	1/5	7/34	300	360	12	10	1140	P.89	P.110	P.125
			1/10	7/68	150	180	25	21	1530			
			1/15	49/748	100	120	36	30	1780			
			1/20	7/136	75	90	48	40	1910			
			1/25	7/170	60	72	61	50	2050			
		28	1/30	1/30	50	60	73	61	3310	P.92	P.113	P.128
			1/40	221/8610	37.5	45	94	78	3690			
			1/50	187/9030	30	36	117	98	4080			
			1/60	169/9840	25	30	140	117	4450			
			1/80	65/5166	18.8	22.5	187	156	4450			
			* 1/100	55/5418	15	18	193	161	4450			
		32	1/100	7/688	15	18	234	195	6370	P.95	P.116	P.131
			1/120	77/9360	12.5	15	281	234	7640			
			1/160	21/3328	9.4	11.2	374	313	7640			
			1/200	189/38272	7.5	9	431	390	7640			
		40	1/300	7/2160	5	6	626	521	7060	P.98	P.119	-
			* 1/375	77/29328	4	4.8	764	653	7060			
			* 1/450	49/21600	3.3	4	764	764	7060			
		50	* 1/600	57/35360	2.5	3	1225	1044	9800	P.100	P.121	-
			* 1/750	25/19448	2	2.4	1225	1225	9800			
			* 1/900	5/4338	1.7	2	1225	1225	9800			
			* 1/1200	33/40664	1.3	1.5	1225	1225	9800			

Note 1: Please be sure to read the notes on page 76.

Series	Motor Power	Frame Size	Reduction Ratio	Actual Reduction Ratio	Output Shaft Speed r/min		Allowable Output Shaft Torque N·m		Allowable Output Shaft O.H.L.	Drawings		
					50 Hz	60 Hz	50 Hz	60 Hz	N	Foot Mount	Flange Mount	Small Flange Mount
MID	3-Phase 0.75 kW	28	1/5	91/459	300	360	23	19	1650	P.92	P.113	P.128
			1/10	1/10	150	180	45	38	2280			
			1/15	91/1360	100	120	68	57	2800			
			1/20	5/102	75	90	91	75	3050			
			1/25	7/170	60	72	114	94	3180			
		32	1/30	3/92	50	60	136	114	5220	P.95	P.116	P.131
			1/40	13/516	37.5	45	175	146	5470			
			1/50	11/540	30	36	220	183	5780			
			1/60	13/774	25	30	264	220	6080			
			1/80	13/1032	18.8	22.5	351	293	6180			
			* 1/100	11/1080	15	18	362	302	6770			
		40	1/100	91/9000	15	18	439	366	9170	P.98	P.119	-
			1/120	77/9400	12.5	15	527	439	9170			
			1/160	9/1400	9.4	11.2	703	585	9170			
			1/200	9/1750	7.5	9	764	732	9170			
		50	1/300	211/62013	5	6	1176	978	9800	P.100	P.121	-
			* 1/375	94/36103	4	4.8	1225	1225	9800			
			* 1/450	65/29167	3.3	4	1225	1225	9800			
	3-Phase 1.5 kW	32	1/5	1/5	300	360	45	38	2280	P.95	P.116	P.131
			1/10	1/10	150	180	91	75	3180			
			1/15	1/15	100	120	136	114	3690			
			1/20	1/20	75	90	181	151	4190			
			1/25	9/230	60	72	226	189	4410			
		40	1/30	1/30	50	60	272	226	6600	P.98	P.119	-
			1/40	13/540	37.5	45	351	293	6960			
			1/50	11/564	30	36	439	366	6960			
			1/60	91/5400	25	30	527	439	7210			
			1/80	13/1080	18.8	22.5	703	585	7400			
			* 1/100	11/1128	15	18	724	603	7400			
		50	1/100	25/2618	15	18	878	732	12500	P.100	P.121	-
			1/120	77/8993	12.5	15	1060	878	12500			
			* 1/160	33/5474	9.4	11.2	1230	1170	12500			
			* 1/200	30/5831	7.5	9	1230	1230	12500			
	3-Phase 2.2 kW	40	1/5	7/36	300	360	67	56	2800	P.98	P.119	-
			1/10	7/72	150	180	133	111	4080			
			1/15	49/720	100	120	200	167	4580			
			1/20	7/144	75	90	266	221	5220			
			1/25	7/180	60	72	332	277	6110			
		50	1/30	5/154	50	60	399	332	9040	P.100	P.121	-
			1/40	399/15488	37.5	45	515	429	9420			
			1/50	399/20240	30	36	644	537	10000			
			1/60	49/2904	25	30	773	644	10000			
			1/80	49/3795	18.8	22.5	1029	858	10100			
			* 1/100	21/2116	15	18	1230	1080	10100			

Note 1: Please be sure to read the notes on page 76.

GA Type Gearmotors/Gearmotors with Brake

[Notes]
- The values in parentheses ( ) in the drawings are the indications for gearmotors with brake.
- The output shaft speed is the value relative to the synchronous speed of the motor and the reduction ratio.
- ▭ in the performance table indicates that the shaft rotates clockwise when viewed from the output shaft side when the connection is made as shown on page 547 (CW). (Refer to the figure on the right)
- Allowable output shaft O.H.L. is the value at the middle of the output shaft.
- The "*" mark indicates a limited torque type. Please make sure to check the allowable output shaft torque in the performance table.

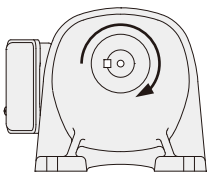

Series	Motor Power	Frame Size	Reduction Ratio	Actual Reduction Ratio	Output Shaft Speed r/min		Allowable Output Shaft Torque N·m		Allowable Output Shaft O.H.L.	Drawings		
					50 Hz	60 Hz	50 Hz	60 Hz	N	Foot Mount	Flange Mount	Small Flange Mount
MID	3-Phase 0.4 kW	50	* 1/600	57/35360	2.5	3	1225	1044	9800	P.102	-	-
			* 1/750	25/19448	2	2.4	1225	1225	9800			
			* 1/900	5/4338	1.7	2	1225	1225	9800			
			* 1/1200	33/40664	1.3	1.5	1225	1225	9800			
	3-Phase 0.75 kW	50	1/300	211/62013	5	6	1176	978	9800	P.102	-	-
			* 1/375	94/36103	4	4.8	1225	1225	9800			
			* 1/450	65/29167	3.3	4	1225	1225	9800			
	3-Phase 1.5 kW	50	1/100	25/2618	15	18	878	732	12500	P.102	-	-
			1/120	77/8993	12.5	15	1060	878	12500			
			* 1/160	33/5474	9.4	11.2	1230	1170	12500			
			* 1/200	30/5831	7.5	9	1230	1230	12500			
	3-Phase 2.2 kW	50	1/30	5/154	50	60	399	332	9040	P.102	-	-
			1/40	399/15488	37.5	45	515	429	9420			
			1/50	399/20240	30	36	644	537	10000			
			1/60	49/2904	25	30	773	644	10000			
			1/80	49/3795	18.8	22.5	1029	858	10100			
			* 1/100	21/2116	15	18	1230	1080	10100			

G3 Type Gearmotors/Gearmotors with Brake

[Notes]
- The values in parentheses ( ) in the drawings are the indications for gearmotors with brake.
- The output shaft speed is the value relative to the synchronous speed of the motor and the reduction ratio.
- ▭ in the performance table indicates that the shaft rotates clockwise when viewed from the output shaft side when the connection is made as shown on page 548 (CW). (Refer to the figure on the right)
- Allowable output shaft O.H.L. is the value at the middle of the output shaft.
- The "*" mark indicates a limited torque type. Please make sure to check the allowable output shaft torque in the performance table.

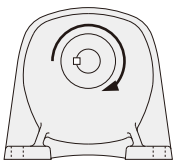

Series	Motor Power	Frame Size	Reduction Ratio	Actual Reduction Ratio	Output Shaft Speed r/min		Allowable Output Shaft Torque N·m		Allowable Output Shaft O.H.L. N	Drawings		
					50 Hz	60 Hz	50 Hz	60 Hz		Foot Mount	Flange Mount	Small Flange Mount
MID	1-Phase 0.1 kW	18	1/5	33/164	300	360	3	2.5	770	P.87	P.108	P.123
			1/10	77/779	150	180	6.1	5	1140			
			1/15	119/1804	100	120	9.1	7.5	1270			
			1/20	49/984	75	90	12	9.8	1530			
			1/25	28/697	60	72	15	12.7	1650			
			1/30	35/1066	50	60	19	14.7	1780			
			1/40	35/1404	37.5	45	24	19.6	1910			
			1/50	7/351	30	36	29	24.5	2040			
		22	1/60	11/684	25	30	35	29.4	2800	P.90	P.111	P.126
			1/80	21/1634	18.8	22.5	47	39.2	3180			
			1/100	7/684	15	18	59	49	3180			
			1/120	147/17974	12.5	15	71	58.8	3180			
			1/160	21/3268	9.4	11.2	94	78.4	3180			
			1/200	21/4085	7.5	9	117	98	3180			
		28	1/300	221/65190	5	6	157	130	3430	P.93	P.114	P.129
			1/375	187/68370	4	4.8	196	163	3430			
			1/450	1183/521520	3.3	4	235	196	3430			
		32	1/600	147/88192	2.5	3	313	261	5880	P.96	P.117	P.132
			1/750	49/36464	2	2.4	391	326	5880			
			* 1/900	62/57063	1.7	2	431	391	5880			
			* 1/1200	46/55195	1.3	1.5	431	431	5880			
	1-Phase 0.2 kW	18	1/5	33/164	300	360	6.1	5	770	P.87	P.108	P.123
			1/10	77/779	150	180	11.8	9.8	1140			
			1/15	119/1804	100	120	18.6	14.7	1270			
			1/20	49/984	75	90	24.5	20.6	1450			
			1/25	28/697	60	72	30.4	25.5	1550			
		22	1/30	7/216	50	60	36.3	30.4	2280	P.90	P.111	P.126
			1/40	91/3600	37.5	45	47	39.2	2410			
			1/50	11/540	30	36	58.8	49	2540			
			1/60	637/39600	25	30	70.6	58.8	2800			
			1/80	91/7200	18.8	22.5	94.1	78.4	3000			
			* 1/100	11/1080	15	18	97	80.4	3180			
		28	1/100	13/1353	15	18	117	98	3690	P.93	P.114	P.129
			1/120	91/11000	12.5	15	140	117	4320			
			1/160	1/165	9.4	11.2	187	156	4450			
			1/200	7/1375	7.5	9	234	195	4450			
		32	1/300	91/27348	5	6	313	261	5880	P.96	P.117	P.132
			1/375	77/28620	4	4.8	391	326	5880			
			1/450	91/41022	3.3	4	431	391	5880			
		40	1/600	9/5300	2.5	3	626	521	7060	P.99	P.120	-
			* 1/750	62/46427	2	2.4	764	653	7060			
			* 1/900	23/21259	1.7	2	764	764	7060			
			* 1/1200	9/10600	1.3	1.5	764	764	7060			

Series	Motor Power	Frame Size	Reduction Ratio	Actual Reduction Ratio	Output Shaft Speed r/min		Allowable Output Shaft Torque N·m		Allowable Output Shaft O.H.L. N	Drawings		
					50 Hz	60 Hz	50 Hz	60 Hz		Foot Mount	Flange Mount	Small Flange Mount
MID	1-Phase 0.4 kW	22	1/5	7/34	300	360	12	10	1140	P.90	P.111	P.126
			1/10	7/68	150	180	25	21	1530			
			1/15	49/748	100	120	36	30	1780			
			1/20	7/136	75	90	48	40	1910			
			1/25	7/170	60	72	61	50	2050			
		28	1/30	1/30	50	60	73	61	3310	P.93	P.114	P.129
			1/40	221/8610	37.5	45	94	78	3690			
			1/50	187/9030	30	36	117	98	4080			
			1/60	169/9840	25	30	140	117	4450			
			1/80	65/5166	18.8	22.5	187	156	4450			
			* 1/100	55/5418	15	18	193	161	4450			
		32	1/100	7/688	15	18	234	195	6370	P.96	P.117	P.132
			1/120	77/9360	12.5	15	281	234	7640			
			1/160	21/3328	9.4	11.2	374	313	7640			
			1/200	189/38272	7.5	9	431	390	7640			
		40	1/300	7/2160	5	6	626	521	7060	P.99	P.120	-
			* 1/375	77/29328	4	4.8	764	653	7060			
			* 1/450	49/21600	3.3	4	764	764	7060			
		50	* 1/600	57/35360	2.5	3	1225	1044	9800	P.101	P.122	-
			* 1/750	25/19448	2	2.4	1225	1225	9800			
			* 1/900	5/4338	1.7	2	1225	1225	9800			
			* 1/1200	33/40664	1.3	1.5	1225	1225	9800			

GA Type Gearmotors/Gearmotors with Brake

[Notes]
- The values in parentheses ( ) in the drawings are the indications for gearmotors with brake.
- The output shaft speed is the value relative to the synchronous speed of the motor and the reduction ratio.
- ▭ in the performance table indicates that the shaft rotates clockwise when viewed from the output shaft side when the connection is made as shown on page 548 (CW). (Refer to the figure on the right)
- Allowable output shaft O.H.L. is the value at the middle of the output shaft.
- The "*" mark indicates a limited torque type. Please make sure to check the allowable output shaft torque in the performance table.

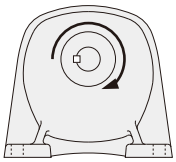

Series	Motor Power	Frame Size	Reduction Ratio	Actual Reduction Ratio	Output Shaft Speed r/min		Allowable Output Shaft Torque N·m		Allowable Output Shaft O.H.L. N	Drawings		
					50 Hz	60 Hz	50 Hz	60 Hz		Foot Mount	Flange Mount	Small Flange Mount
MID	1-Phase 0.4 kW	50	* 1/600	57/35360	2.5	3	1225	1044	9800	P.103	-	-
			* 1/750	25/19448	2	2.4	1225	1225	9800			
			* 1/900	5/4338	1.7	2	1225	1225	9800			
			* 1/1200	33/40664	1.3	1.5	1225	1225	9800			

1-3. Drawings

G Type Parallel Shaft | Shaft Diameter **12** | **Foot** Mounting

The values in parentheses ( ) are the indications for gearmotors with brake.

<Figure 1>

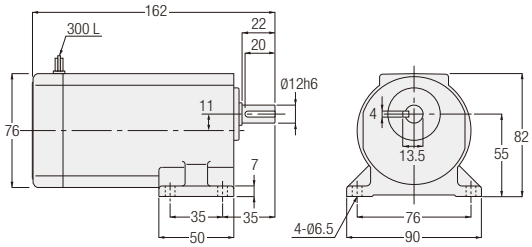

<Figure 2>

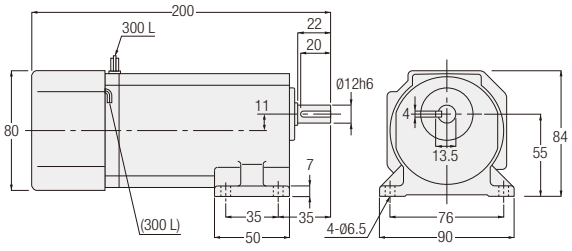

Number of Phases	Power	Part Number	Reduction Ratio	Figure Number	Brake	Approx. Weight (kg)
3-Phase	15 W	GLM-12-✱✱✱-T15	5, 7.5, 10, 15, 20, 25, 30, 40, 50, 60, 80, 100, 120, 160, 200, 240	1	No	2
		GLM-12-✱✱✱-T15W				
		GLMN-12-✱✱✱-T15	5, 7.5, 10, 15, 20, 25, 30, 40, 50, 60, 80, 100, 120, 160, 200, 240	2	Yes	2
		GLMN-12-✱✱✱-T15W				
	25 W	GLM-12-✱✱✱-T25	5, 7.5, 10, 15, 20, 25, 30, 40, 50, 60, 80, 100, 120	1	No	2
		GLM-12-✱✱✱-T25W				
		GLMN-12-✱✱✱-T25	5, 7.5, 10, 15, 20, 25, 30, 40, 50, 60, 80, 100, 120	2	Yes	2
		GLMN-12-✱✱✱-T25W				
	40 W	GLM-12-✱✱✱-T40	5, 7.5, 10, 15, 20, 25, 30, 40, 50, 60	1	No	2
		GLM-12-✱✱✱-T40W		2		
		GLMN-12-✱✱✱-T40	5, 7.5, 10, 15, 20, 25, 30, 40, 50, 60	2	Yes	2
		GLMN-12-✱✱✱-T40W				
	60 W	GLM-12-✱✱✱-T60	5, 7.5, 10, 15, 20, 25, 30	2	No	2
		GLMN-12-✱✱✱-T60			Yes	
1-Phase	15 W	GLM-12-✱✱✱-S15	5, 7.5, 10, 15, 20, 25, 30, 40, 50, 60, 80, 100, 120, 160, 200, 240	1	No	2
		GLM-12-✱✱✱-S15W				
		GLMN-12-✱✱✱-S15	5, 7.5, 10, 15, 20, 25, 30, 40, 50, 60, 80, 100, 120, 160, 200, 240	2	Yes	2
		GLMN-12-✱✱✱-S15W				
	25 W	GLM-12-✱✱✱-S25	5, 7.5, 10, 15, 20, 25, 30, 40, 50, 60, 80, 100, 120	1	No	2
		GLM-12-✱✱✱-S25W				
		GLMN-12-✱✱✱-S25	5, 7.5, 10, 15, 20, 25, 30, 40, 50, 60, 80, 100, 120	2	Yes	2
		GLMN-12-✱✱✱-S25W				
	40 W	GLM-12-✱✱✱-S40	5, 7.5, 10, 15, 20, 25, 30, 40, 50, 60	2	No	2
		GLM-12-✱✱✱-S40W				
		GLMN-12-✱✱✱-S40	5, 7.5, 10, 15, 20, 25, 30, 40, 50, 60	2	Yes	2
		GLMN-12-✱✱✱-S40W				

Note: A reduction ratio will be indicated as ✱✱✱ in the nomenclature.
Note: Please refer to page 73 for the performance table.

G Type Parallel Shaft | Shaft Diameter 15 | Foot Mounting

The values in parentheses ( ) are the indications for gearmotors with brake.

<Figure 1>

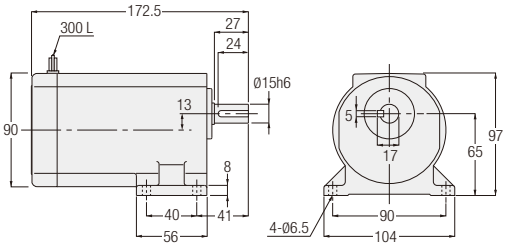

<Figure 2>

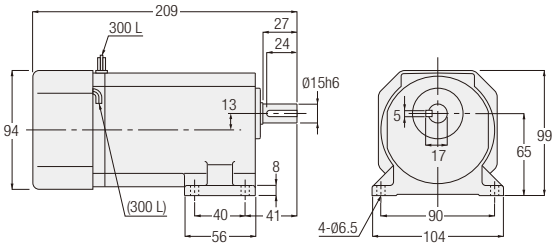

Number of Phases	Power	Part Number	Reduction Ratio	Figure Number	Brake	Approx. Weight (kg)
3-Phase	25 W	GLM-15-✱✱✱-T25	160, 200, 240	1	No	3
		GLM-15-✱✱✱-T25W				
		GLMN-15-✱✱✱-T25	160, 200, 240	2	Yes	3
		GLMN-15-✱✱✱-T25W				
	40 W	GLM-15-✱✱✱-T40	80, 100, 120	1	No	3
		GLM-15-✱✱✱-T40W				
		GLMN-15-✱✱✱-T40	80, 100, 120	2	Yes	3
		GLMN-15-✱✱✱-T40W				
	60 W	GLM-15-✱✱✱-T60	40, 50, 60	1	No	3
		GLM-15-✱✱✱-T60W	5, 7.5, 10, 15, 20, 25, 30, 40, 50, 60			
		GLMN-15-✱✱✱-T60	40, 50, 60	2	Yes	3
		GLMN-15-✱✱✱-T60W	5, 7.5, 10, 15, 20, 25, 30, 40, 50, 60			
	90 W	GLM-15-✱✱✱-T90	5, 7.5, 10, 15, 20, 25, 30	1	No	3
		GLM-15-✱✱✱-T90W		2		
		GLMN-15-✱✱✱-T90	5, 7.5, 10, 15, 20, 25, 30	2	Yes	3
		GLMN-15-✱✱✱-T90W				
1-Phase	25 W	GLM-15-✱✱✱-S25	160, 200, 240	1	No	3
		GLM-15-✱✱✱-S25W				
		GLMN-15-✱✱✱-S25	160, 200, 240	2	Yes	3
		GLMN-15-✱✱✱-S25W				
	40 W	GLM-15-✱✱✱-S40	80, 100, 120	1	No	3
		GLM-15-✱✱✱-S40W				
		GLMN-15-✱✱✱-S40	80, 100, 120	2	Yes	3
		GLMN-15-✱✱✱-S40W				
	60 W	GLM-15-✱✱✱-S60	5, 7.5, 10, 15, 20, 25, 30, 40, 50, 60	2	No	3
		GLM-15-✱✱✱-S60W				
		GLMN-15-✱✱✱-S60	5, 7.5, 10, 15, 20, 25, 30, 40, 50, 60	2	Yes	3
		GLMN-15-✱✱✱-S60W				
	90 W	GLM-15-✱✱✱-S90	5, 7.5, 10, 15, 20, 25, 30	2	No	3
		GLM-15-✱✱✱-S90W				
		GLMN-15-✱✱✱-S90	5, 7.5, 10, 15, 20, 25, 30	2	Yes	3
		GLMN-15-✱✱✱-S90W				

Note: A reduction ratio will be indicated as ✱✱✱ in the nomenclature.
Note: Please refer to page 73 for the performance table.

G Type Parallel Shaft | Shaft Diameter **18** | **Foot** Mounting

The values in parentheses ( ) are the indications for gearmotors with brake.

<Figure 1>

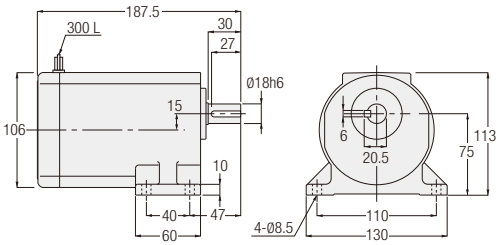

<Figure 2>

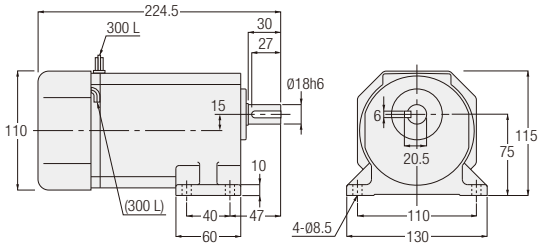

Number of Phases	Power	Part Number	Reduction Ratio	Figure Number	Brake	Approx. Weight (kg)
3-Phase	40 W	GLM-18-***-T40	160, 200, 240	1	No	4
		GLM-18-***-T40W				
		GLMN-18-***-T40	160, 200, 240	2	Yes	4
		GLMN-18-***-T40W				
	60 W	GLM-18-***-T60	80, 100, 120, 160, 200, 240	1	No	4
		GLM-18-***-T60W				
		GLMN-18-***-T60	80, 100, 120, 160, 200, 240	2	Yes	4
		GLMN-18-***-T60W				
	90 W	GLM-18-***-T90	40, 50, 60, 80, 100, 120, 160, 200, 240	1	No	4
		GLM-18-***-T90W				
		GLMN-18-***-T90	40, 50, 60, 80, 100, 120, 160, 200, 240	2	Yes	4
		GLMN-18-***-T90W				
1-Phase	40 W	GLM-18-***-S40	160, 200, 240	1	No	4
		GLM-18-***-S40W				
		GLMN-18-***-S40	160, 200, 240	2	Yes	4
		GLMN-18-***-S40W				
	60 W	GLM-18-***-S60	80, 100, 120, 160, 200, 240	1	No	4
		GLM-18-***-S60W				
		GLMN-18-***-S60	80, 100, 120, 160, 200, 240	2	Yes	4
		GLMN-18-***-S60W				
	90 W	GLM-18-***-S90	40, 50, 60, 80, 100, 120, 160, 200, 240	2	No	4
		GLM-18-***-S90W				
		GLMN-18-***-S90	40, 50, 60, 80, 100, 120, 160, 200, 240	2	Yes	4
		GLMN-18-***-S90W				

Note: A reduction ratio will be indicated as *** in the nomenclature.
Note: Please refer to page 74 for the performance table.

G3 Type Parallel Shaft | Shaft Diameter 18 | Foot Mounting

The values in parentheses ( ) are the indications for gearmotors with brake.

<Figure 1>

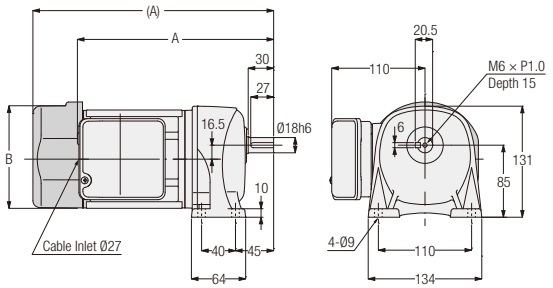

Number of Phases	Power	Part Number	Reduction Ratio	Figure Number	Brake	Approx. Weight (kg)	A	B
3-Phase	0.1 kW	G3L18N✱✱✱-MM01T◇◇TN	5, 10, 15, 20, 25, 30, 40, 50	1	No	6	218.5	Ø115
		G3L18N✱✱✱-MM01T◇◇TB◆			Yes	7.5	258.5	□126
	0.2 kW	G3L18N✱✱✱-MM02T◇◇TN	5, 10, 15, 20, 25	1	No	6.5	233.5	Ø115
		G3L18N✱✱✱-MM02T◇◇TB◆			Yes	8	284	□126

Note: A reduction ratio will be indicated as ✱✱✱ in the nomenclature. In addition, a supply voltage/certification code will be indicated as ◇◇, and a brake specification will be indicated as ◆.

Note: Please refer to page 76 for the performance table.

G3 Type Parallel Shaft | Shaft Diameter **18** | **Foot** Mounting

The values in parentheses ( ) are the indications for gearmotors with brake.

<Figure 1>

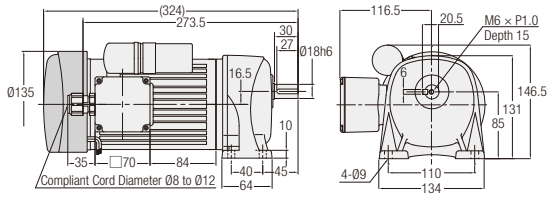

<Figure 2>

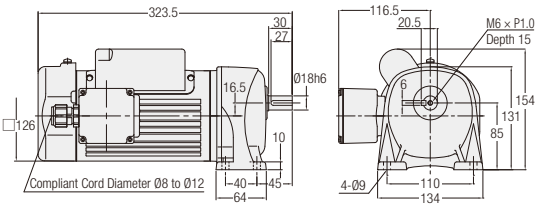

<Figure 3>

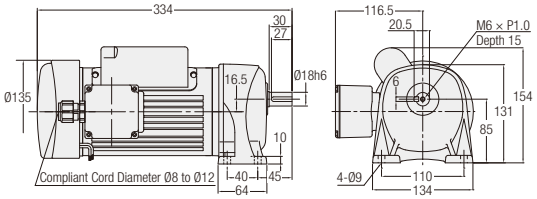

Number of Phases	Power	Part Number	Reduction Ratio	Figure Number	Brake	Approx. Weight (kg)
1-Phase	0.1 kW	G3L18N✱✱✱-MM01C◇JAN	5, 10, 15, 20, 25, 30, 40, 50	1	No	7.5
		G3L18N✱✱✱-MM01C◇JAB2			Yes	9
	0.2 kW	G3L18N✱✱✱-MM02C◇JAN	5, 10, 15, 20, 25	2	No	8.5
		G3L18N✱✱✱-MM02C◇JAB2		3	Yes	10

Note: A reduction ratio will be indicated as ✱✱✱ in the nomenclature. In addition, a supply voltage code will be indicated as ◇.
Note: Please refer to page 80 for the performance table.

G Type Parallel Shaft | Shaft Diameter 22 | Foot Mounting

The values in parentheses ( ) are the indications for gearmotors with brake.

<Figure 1>

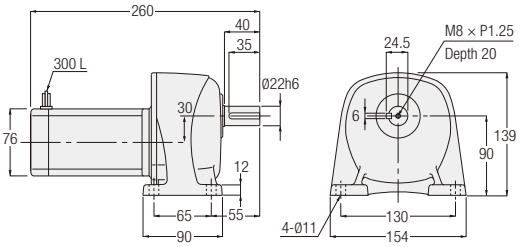

<Figure 2>

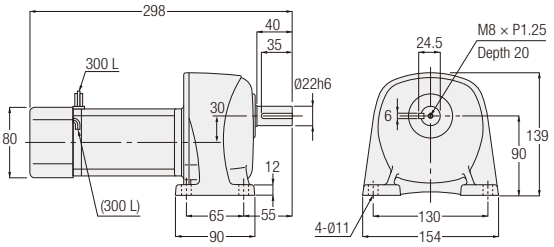

Number of Phases	Power	Part Number	Reduction Ratio	Figure Number	Brake	Approx. Weight (kg)
3-Phase	15 W	GLM-22-✱✱✱-T15	300, 375, 450, 600, 750, 900, 1200, 1500, 1800	1	No	5
		GLM-22-✱✱✱-T15W				
		GLMN-22-✱✱✱-T15	300, 375, 450, 600, 750, 900, 1200, 1500, 1800	2	Yes	5
		GLMN-22-✱✱✱-T15W				
	25 W	GLM-22-✱✱✱-T25	300, 375, 450, 600, 750, 900	1	No	5
		GLM-22-✱✱✱-T25W				
		GLMN-22-✱✱✱-T25	300, 375, 450, 600, 750, 900	2	Yes	5
		GLMN-22-✱✱✱-T25W				
	40 W	GLM-22-✱✱✱-T40	300, 375, 450	1	No	5
		GLM-22-✱✱✱-T40W		2		
		GLMN-22-✱✱✱-T40	300, 375, 450	2	Yes	5
		GLMN-22-✱✱✱-T40W				
	60 W	GLM-22-✱✱✱-T60	300, 375, 450	2	No	5
		GLM-22-✱✱✱-T60W				
		GLMN-22-✱✱✱-T60	300, 375, 450	2	Yes	5
		GLMN-22-✱✱✱-T60W				
1-Phase	15 W	GLM-22-✱✱✱-S15	300, 375, 450, 600, 750, 900, 1200, 1500, 1800	1	No	5
		GLM-22-✱✱✱-S15W				
		GLMN-22-✱✱✱-S15	300, 375, 450, 600, 750, 900, 1200, 1500, 1800	2	Yes	5
		GLMN-22-✱✱✱-S15W				
	25 W	GLM-22-✱✱✱-S25	300, 375, 450, 600, 750, 900	1	No	5
		GLM-22-✱✱✱-S25W				
		GLMN-22-✱✱✱-S25	300, 375, 450, 600, 750, 900	2	Yes	5
		GLMN-22-✱✱✱-S25W				
	40 W	GLM-22-✱✱✱-S40	300, 375, 450	2	No	5
		GLM-22-✱✱✱-S40W				
		GLMN-22-✱✱✱-S40	300, 375, 450	2	Yes	5
		GLMN-22-✱✱✱-S40W				
	60 W	GLM-22-✱✱✱-S60	300, 375, 450	2	No	5
		GLM-22-✱✱✱-S60W				
		GLMN-22-✱✱✱-S60	300, 375, 450	2	Yes	5
		GLMN-22-✱✱✱-S60W				

Note: A reduction ratio will be indicated as ✱✱✱ in the nomenclature.
Note: Please refer to page 73 for the performance table.

G3 Type Parallel Shaft | Shaft Diameter 22 | **Foot** Mounting

The values in parentheses ( ) are the indications for gearmotors with brake.

<Figure 1>

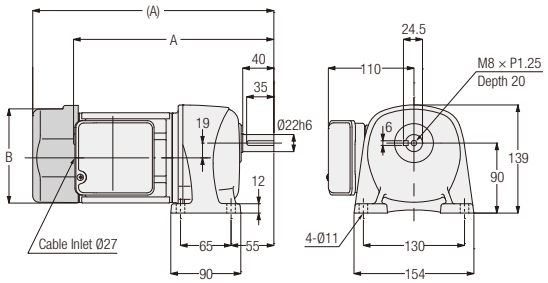

<Figure 2>

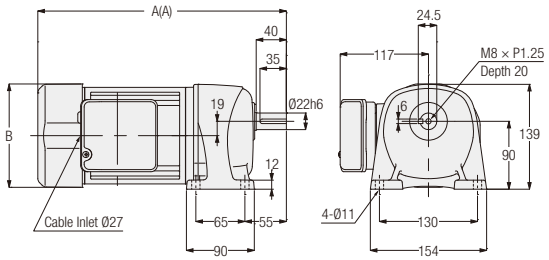

Number of Phases	Power	Part Number	Reduction Ratio	Figure Number	Brake	Approx. Weight (kg)	A	B
3-Phase	0.1 kW	G3L22N✱✱✱-MM01T◇◇TN	60, 80, 100, 120, 160, 200	1	No	7	244.5	Ø115
		G3L22N✱✱✱-MM01T◇◇TB◆			Yes	8.5	284.5	□126
	0.2 kW	G3L22N✱✱✱-MM02T◇◇TN	30, 40, 50, 60, 80, 100	1	No	7.5	259.5	Ø115
		G3L22N✱✱✱-MM02T◇◇TB◆			Yes	9	310	□126
	0.4 kW	G3L22N✱✱✱-MM04T◇◇TN	5, 10, 15, 20, 25	2	No	9.5	309.5	□137
		G3L22N✱✱✱-MM04T◇◇TB◆			Yes	11	329.5	□137

Note: A reduction ratio will be indicated as ✱✱✱ in the nomenclature. In addition, a supply voltage/certification code will be indicated as ◇◇, and a brake specification will be indicated as ◆.

Note: Please refer to page 76 for the performance table.

G3 Type Parallel Shaft | Shaft Diameter 22 | Foot Mounting

The values in parentheses ( ) are the indications for gearmotors with brake.

<Figure 1>

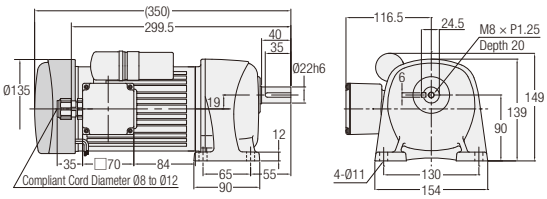

<Figure 2>

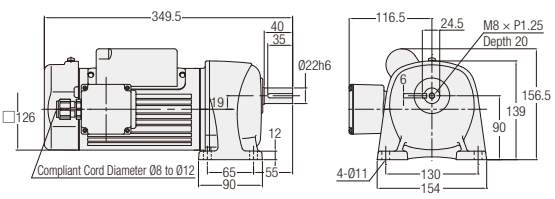

<Figure 3>

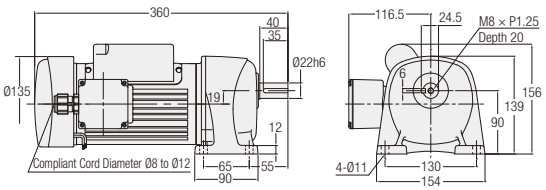

<Figure 4>

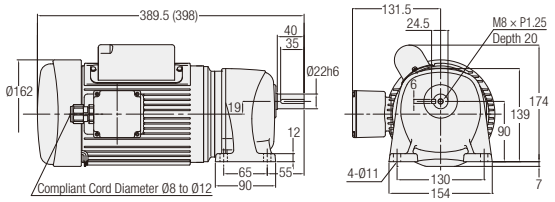

Number of Phases	Power	Part Number	Reduction Ratio	Figure Number	Brake	Approx. Weight (kg)
1-Phase	0.1 kW	G3L22N✱✱✱-MM01C◇JAN	60, 80, 100, 120, 160, 200	1	No	8.5
		G3L22N✱✱✱-MM01C◇JAB2			Yes	10
	0.2 kW	G3L22N✱✱✱-MM02C◇JAN	30, 40, 50, 60, 80, 100	2	No	9.5
		G3L22N✱✱✱-MM02C◇JAB2		3	Yes	11
	0.4 kW	G3L22N✱✱✱-MM04C◇JAN	5, 10, 15, 20, 25	4	No	15
		G3L22N✱✱✱-MM04C◇JAB2			Yes	17.5

Note: A reduction ratio will be indicated as ✱✱✱ in the nomenclature. In addition, a supply voltage code will be indicated as ◇.
Note: Please refer to page 80 for the performance table.

G Type Parallel Shaft | Shaft Diameter **28** | **Foot** Mounting

The values in parentheses ( ) are the indications for gearmotors with brake.

<Figure 1>

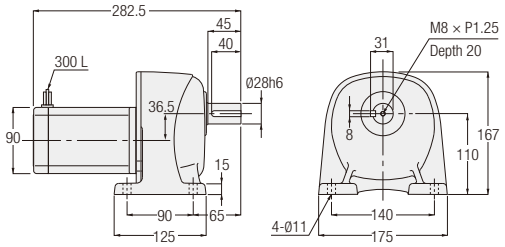

<Figure 2>

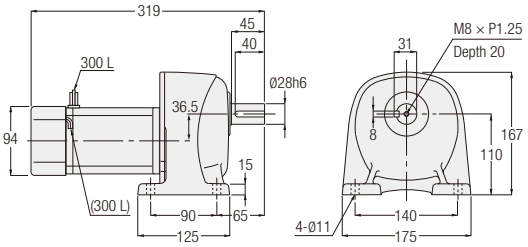

Number of Phases	Power	Part Number	Reduction Ratio	Figure Number	Brake	Approx. Weight (kg)
3-Phase	25 W	GLM-28-***-T25	1200, 1500, 1800	1	No	7
		GLM-28-***-T25W				
		GLMN-28-***-T25	1200, 1500, 1800	2	Yes	7
		GLMN-28-***-T25W				
	40 W	GLM-28-***-T40	600, 750, 900	1	No	7
		GLM-28-***-T40W				
		GLMN-28-***-T40	600, 750, 900	2	Yes	7
		GLMN-28-***-T40W				
	60 W	GLM-28-***-T60	600, 750, 900	1	No	7
		GLM-28-***-T60W				
		GLMN-28-***-T60	600, 750, 900	2	Yes	7
		GLMN-28-***-T60W				
	90 W	GLM-28-***-T90	300, 375, 450	1	No	7
		GLM-28-***-T90W				
		GLMN-28-***-T90	300, 375, 450	2	Yes	7
		GLMN-28-***-T90W				
1-Phase	25 W	GLM-28-***-S25	1200, 1500, 1800	1	No	7
		GLM-28-***-S25W				
		GLMN-28-***-S25	1200, 1500, 1800	2	Yes	7
		GLMN-28-***-S25W				
	40 W	GLM-28-***-S40	600, 750, 900	1	No	7
		GLM-28-***-S40W				
		GLMN-28-***-S40	600, 750, 900	2	Yes	7
		GLMN-28-***-S40W				
	60 W	GLM-28-***-S60	600, 750, 900	1	No	7
		GLM-28-***-S60W				
		GLMN-28-***-S60	600, 750, 900	2	Yes	7
		GLMN-28-***-S60W				
	90 W	GLM-28-***-S90	300, 375, 450	1	No	7
		GLM-28-***-S90W				
		GLMN-28-***-S90	300, 375, 450	2	Yes	7
		GLMN-28-***-S90W				

Note: A reduction ratio will be indicated as *** in the nomenclature.
Note: Please refer to page 73 for the performance table.

G3 Type Parallel Shaft | Shaft Diameter 28 | Foot Mounting

The values in parentheses ( ) are the indications for gearmotors with brake.

<Figure 1>

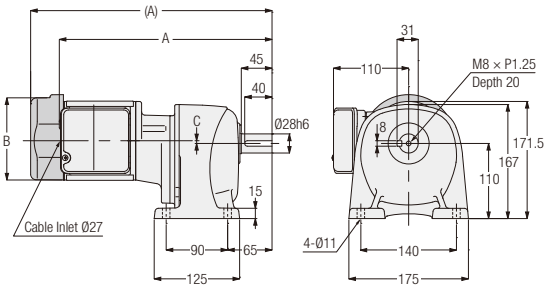

<Figure 2>

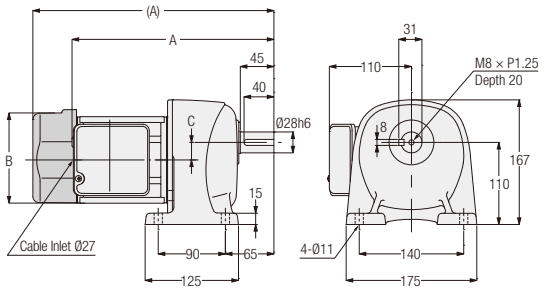

<Figure 3>

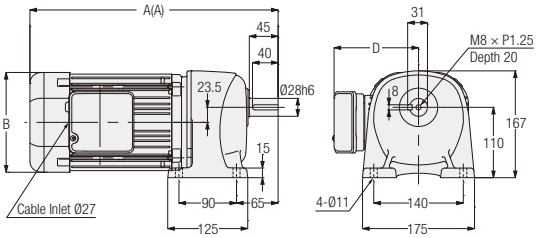

<Figure 4>

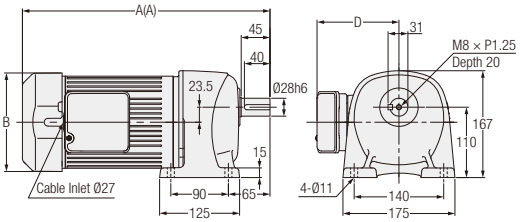

Number of Phases	Power	Part Number	Reduction Ratio	Figure Number	Brake	Approx. Weight (kg)	A	B	C	D
3-Phase	0.1 kW	G3L28N✱✱✱-MM01T◇◇TN	300, 375, 450	1	No	10	313.5	Ø115	4	-
		G3L28N✱✱✱-MM01T◇◇TB◆			Yes	11.5	353.5	□126	4	-
	0.2 kW	G3L28N✱✱✱-MM02T◇◇TN	100, 120, 160, 200	2	No	9.5	272.5	Ø115	23.5	-
		G3L28N✱✱✱-MM02T◇◇TB◆			Yes	11	323	□126	23.5	-
	0.4 kW	G3L28N✱✱✱-MM04T◇◇TN	30, 40, 50, 60, 80, 100	3	No	11.5	325.5	□137	-	117
		G3L28N✱✱✱-MM04T◇◇TB◆			Yes	13	345.5	□137	-	117
	0.75 kW	G3L28N✱✱✱-MR08T◇◇TN	5, 10, 15, 20, 25	4	No	18.5	368	□154	-	128
		G3L28N✱✱✱-MR08T◇◇TB◆			Yes	21	387	□154	-	128

Note: A reduction ratio will be indicated as ✱✱✱ in the nomenclature. In addition, a supply voltage/certification code will be indicated as ◇◇, and a brake specification will be indicated as ◆.

Note: Please refer to page 76 for the performance table.

G3 Type Parallel Shaft | Shaft Diameter **28** | **Foot** Mounting

The values in parentheses ( ) are the indications for gearmotors with brake.

<Figure 1>

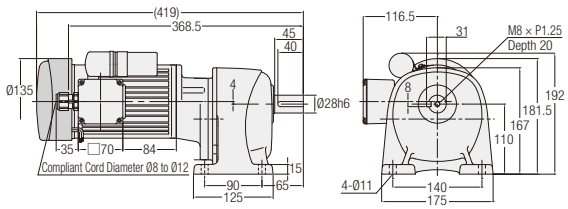

<Figure 2>

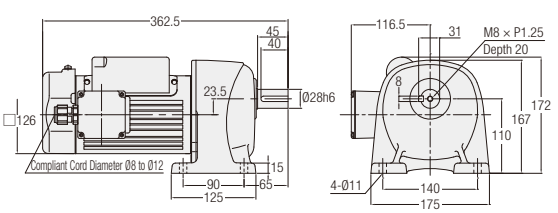

<Figure 3>

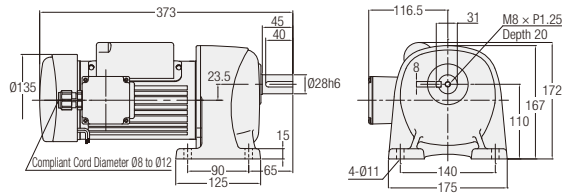

<Figure 4>

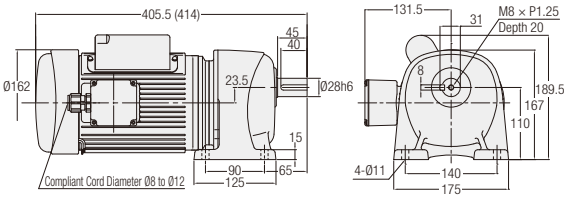

Number of Phases	Power	Part Number	Reduction Ratio	Figure Number	Brake	Approx. Weight (kg)
1-Phase	0.1 kW	G3L28N✱✱✱-MM01C◇JAN	300, 375, 450	1	No	11.5
		G3L28N✱✱✱-MM01C◇JAB2			Yes	13
	0.2 kW	G3L28N✱✱✱-MM02C◇JAN	100, 120, 160, 200	2	No	11.5
		G3L28N✱✱✱-MM02C◇JAB2		3	Yes	13
	0.4 kW	G3L28N✱✱✱-MM04C◇JAN	30, 40, 50, 60, 80, 100	4	No	17
		G3L28N✱✱✱-MM04C◇JAB2			Yes	19.5

Note: A reduction ratio will be indicated as ✱✱✱ in the nomenclature. In addition, a supply voltage code will be indicated as ◇.
Note: Please refer to page 80 for the performance table.

G Type Parallel Shaft | Shaft Diameter 32 | Foot Mounting

The values in parentheses ( ) are the indications for gearmotors with brake.

<Figure 1>

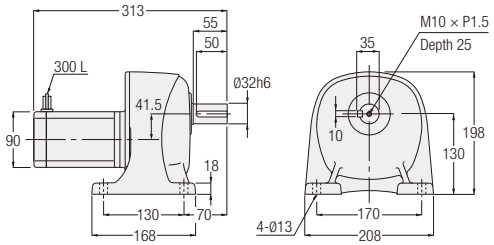

<Figure 2>

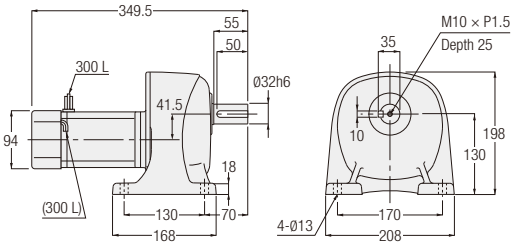

Number of Phases	Power	Part Number	Reduction Ratio	Figure Number	Brake	Approx. Weight (kg)
3-Phase	40 W	GLM-32-✱✱✱-T40	1200, 1500, 1800	1	No	11
		GLM-32-✱✱✱-T40W				
		GLMN-32-✱✱✱-T40	1200, 1500, 1800	2	Yes	11
		GLMN-32-✱✱✱-T40W				
	60 W	GLM-32-✱✱✱-T60	1200, 1500, 1800	1	No	11
		GLM-32-✱✱✱-T60W				
		GLMN-32-✱✱✱-T60	1200, 1500, 1800	2	Yes	11
		GLMN-32-✱✱✱-T60W				
	90 W	GLM-32-✱✱✱-T90	600, 750, 900	1	No	11
		GLM-32-✱✱✱-T90W		2		
		GLMN-32-✱✱✱-T90	600, 750, 900	2	Yes	11
		GLMN-32-✱✱✱-T90W				
1-Phase	40 W	GLM-32-✱✱✱-S40	1200, 1500, 1800	1	No	11
		GLM-32-✱✱✱-S40W				
		GLMN-32-✱✱✱-S40	1200, 1500, 1800	2	Yes	11
		GLMN-32-✱✱✱-S40W				
	60 W	GLM-32-✱✱✱-S60	1200, 1500, 1800	2	No	11
		GLM-32-✱✱✱-S60W				
		GLMN-32-✱✱✱-S60	1200, 1500, 1800	2	Yes	11
		GLMN-32-✱✱✱-S60W				
	90 W	GLM-32-✱✱✱-S90	600, 750, 900	2	No	11
		GLM-32-✱✱✱-S90W				
		GLMN-32-✱✱✱-S90	600, 750, 900	2	Yes	11
		GLMN-32-✱✱✱-S90W				

Note: A reduction ratio will be indicated as ✱✱✱ in the nomenclature.
Note: Please refer to page 74 for the performance table.

G3 Type Parallel Shaft | Shaft Diameter **32** | **Foot** Mounting

The values in parentheses ( ) are the indications for gearmotors with brake.

<Figure 1>

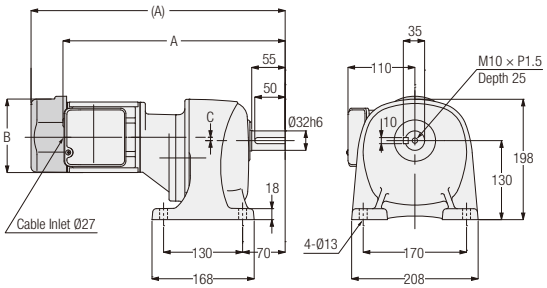

<Figure 2>

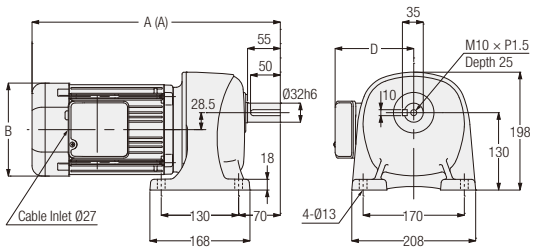

<Figure 3>

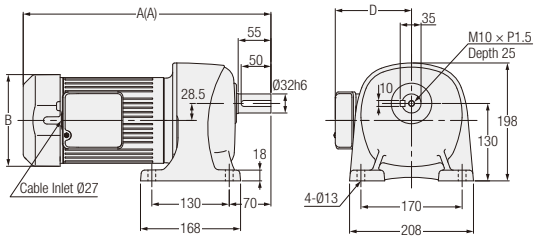

Number of Phases	Power	Part Number	Reduction Ratio	Figure Number	Brake	Approx. Weight (kg)	A	B	C	D
3-Phase	0.1 kW	G3L32N✱✱✱-MM01T◇◇TN	600, 750, 900, 1200	1	No	13	332.5	Ø115	-1	-
		G3L32N✱✱✱-MM01T◇◇TB◆			Yes	14.5	372.5	□126	-1	-
	0.2 kW	G3L32N✱✱✱-MM02T◇◇TN	300, 375, 450	1	No	13.5	367.5	Ø115	5.5	-
		G3L32N✱✱✱-MM02T◇◇TB◆			Yes	15	418	□126	5.5	-
	0.4 kW	G3L32N✱✱✱-MM04T◇◇TN	100, 120, 160, 200	2	No	14.5	344.5	□137	-	117
		G3L32N✱✱✱-MM04T◇◇TB◆			Yes	16	364.5	□137	-	117
	0.75 kW	G3L32N✱✱✱-MR08T◇◇TN	30, 40, 50, 60, 80, 100	3	No	22	397	□154	-	128
		G3L32N✱✱✱-MR08T◇◇TB◆			Yes	24.5	416	□154	-	128
	1.5 kW	G3L32N✱✱✱-MR15T◇◇TN	5, 10, 15, 20, 25	3	No	28	433	□178	-	139
		G3L32N✱✱✱-MR15T◇◇TB◆			Yes	31.5	462	□178	-	139

Note: A reduction ratio will be indicated as ✱✱✱ in the nomenclature. In addition, a supply voltage/certification code will be indicated as ◇◇, and a brake specification will be indicated as ◆.

Note: Please refer to page 76 for the performance table.

G3 Type Parallel Shaft | Shaft Diameter 32 | Foot Mounting

The values in parentheses ( ) are the indications for gearmotors with brake.

<Figure 1>

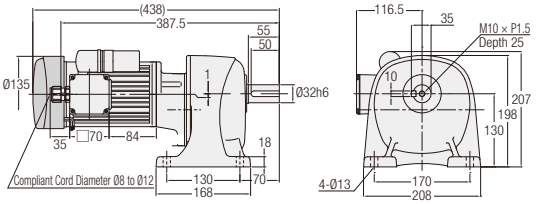

<Figure 2>

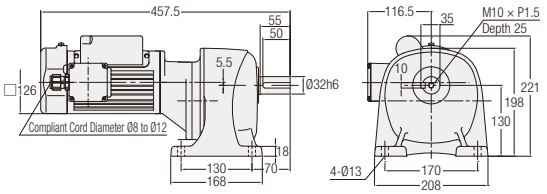

<Figure 3>

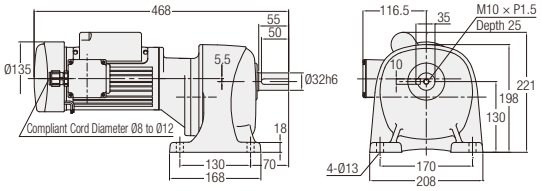

<Figure 4>

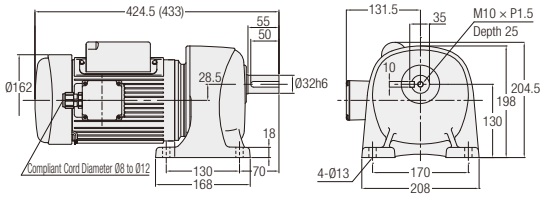

Number of Phases	Power	Part Number	Reduction Ratio	Figure Number	Brake	Approx. Weight (kg)
1-Phase	0.1 kW	G3L32N✱✱✱-MM01C◇JAN	600, 750, 900, 1200	1	No	14.5
		G3L32N✱✱✱-MM01C◇JAB2			Yes	16
	0.2 kW	G3L32N✱✱✱-MM02C◇JAN	300, 375, 450	2	No	15.5
		G3L32N✱✱✱-MM02C◇JAB2		3	Yes	17
	0.4 kW	G3L32N✱✱✱-MM04C◇JAN	100, 120, 160, 200	4	No	20
		G3L32N✱✱✱-MM04C◇JAB2			Yes	22.5

Note: A reduction ratio will be indicated as ✱✱✱ in the nomenclature. In addition, a supply voltage code will be indicated as ◇.
Note: Please refer to page 80 for the performance table.

G Type Parallel Shaft | Shaft Diameter **40** | **Foot** Mounting

The values in parentheses ( ) are the indications for gearmotors with brake.

<Figure 1>

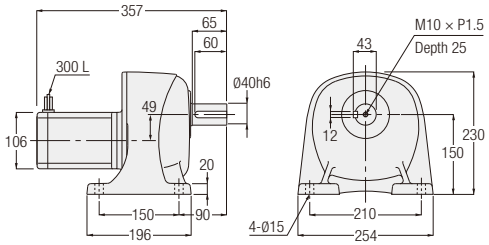

<Figure 2>

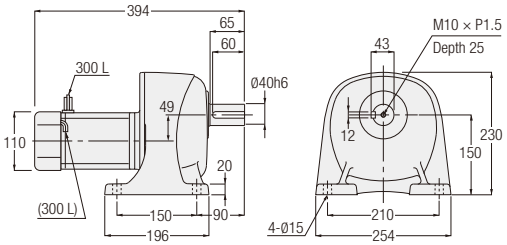

Number of Phases	Power	Part Number	Reduction Ratio	Figure Number	Brake	Approx. Weight (kg)
3-Phase	90 W	GLM-40-✱✱✱-T90	1200, 1500, 1800	1	No	15
		GLM-40-✱✱✱-T90W				
		GLMN-40-✱✱✱-T90	1200, 1500, 1800	2	Yes	15
		GLMN-40-✱✱✱-T90W				
1-Phase	90 W	GLM-40-✱✱✱-S90	1200, 1500, 1800	2	No	15
		GLM-40-✱✱✱-S90W				
		GLMN-40-✱✱✱-S90	1200, 1500, 1800	2	Yes	15
		GLMN-40-✱✱✱-S90W				

Note: A reduction ratio will be indicated as ✱✱✱ in the nomenclature.
Note: Please refer to page 75 for the performance table.

G3 Type Parallel Shaft | Shaft Diameter 40 | Foot Mounting

The values in parentheses ( ) are the indications for gearmotors with brake.

<Figure 1>

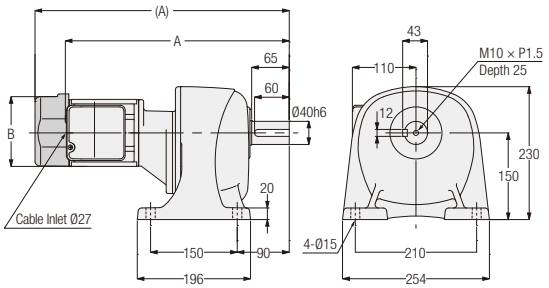

<Figure 2>

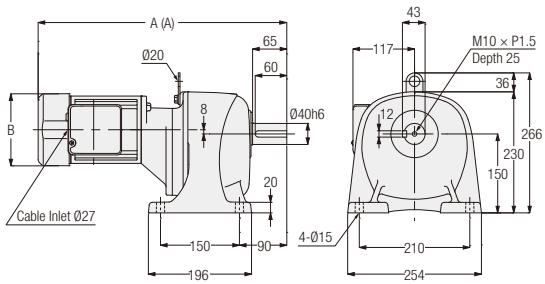

<Figure 3>

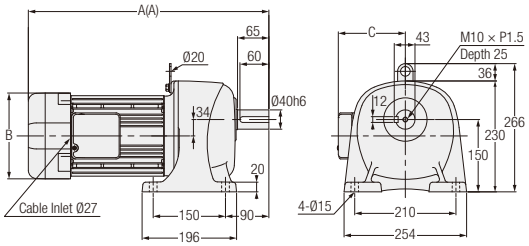

Note: Gearmotors with a motor power of 0.75 kW does not include the hanging plate.

Number of Phases	Power	Part Number	Reduction Ratio	Figure Number	Brake	Approx. Weight (kg)	A	B	C
3-Phase	0.2 kW	G3L40N✱✱✱-MM02T◇◇TN	600, 750, 900, 1200	1	No	20	389.5	Ø115	-
		G3L40N✱✱✱-MM02T◇◇TB◆			Yes	21.5	440	□126	-
	0.4 kW	G3L40N✱✱✱-MM04T◇◇TN	300, 375, 450	2	No	23	452.5	□137	-
		G3L40N✱✱✱-MM04T◇◇TB◆			Yes	24.5	472.5	□137	-
	0.75 kW	G3L40N✱✱✱-MR08T◇◇TN	100, 120, 160, 200	3	No	28.5	419	□154	128
		G3L40N✱✱✱-MR08T◇◇TB◆			Yes	31	438	□154	128
	1.5 kW	G3L40N✱✱✱-MR15T◇◇TN	30, 40, 50, 60, 80, 100	3	No	35	470	□178	139
		G3L40N✱✱✱-MR15T◇◇TB◆			Yes	38.5	499	□178	139
	2.2 kW	G3L40N✱✱✱-MR22T◇◇TN	5, 10, 15, 20, 25	3	No	41.5	503.5	□192	149
		G3L40N✱✱✱-MR22T◇◇TB◆			Yes	45.0	532.5	□192	149

Note: A reduction ratio will be indicated as ✱✱✱ in the nomenclature. In addition, a supply voltage/certification code will be indicated as ◇◇, and a brake specification will be indicated as ◆.

Note: Please refer to page 76 for the performance table.

G3 Type Parallel Shaft | Shaft Diameter **40** | **Foot** Mounting

The values in parentheses ( ) are the indications for gearmotors with brake.

<Figure 1>

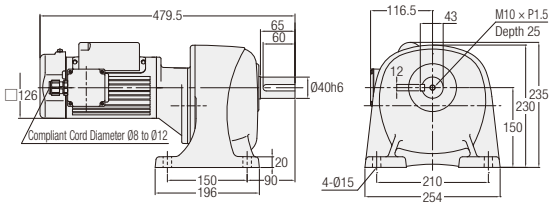

<Figure 2>

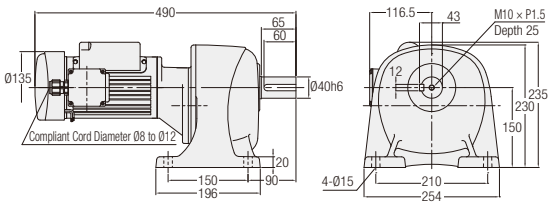

<Figure 3>

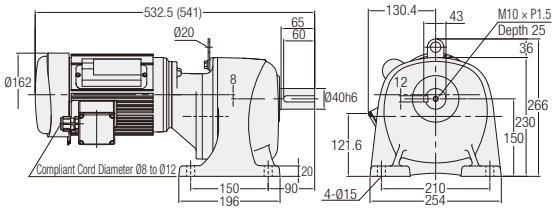

Number of Phases	Power	Part Number	Reduction Ratio	Figure Number	Brake	Approx. Weight (kg)
1-Phase	0.2 kW	G3L40N✱✱✱-MM02C◇JAN	600, 750, 900, 1200	1	No	22
		G3L40N✱✱✱-MM02C◇JAB2		2	Yes	23.5
	0.4 kW	G3L40N✱✱✱-MM04C◇JAN	300, 375, 450	3	No	28.5
		G3L40N✱✱✱-MM04C◇JAB2			Yes	31

Note: A reduction ratio will be indicated as ✱✱✱ in the nomenclature. In addition, a supply voltage code will be indicated as ◇.
Note: Please refer to page 80 for the performance table.

G3 Type Parallel Shaft | Shaft Diameter 50 | Foot Mounting

The values in parentheses ( ) are the indications for gearmotors with brake.

<Figure 1>

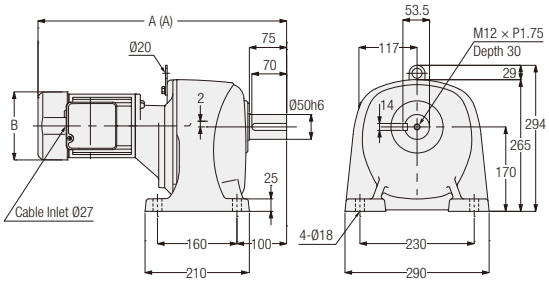

<Figure 2>

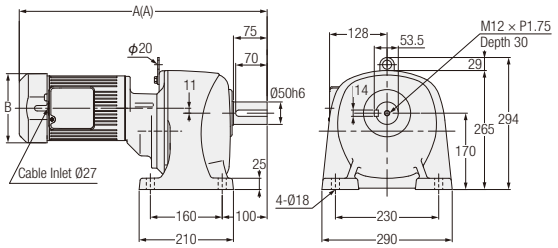

<Figure 3>

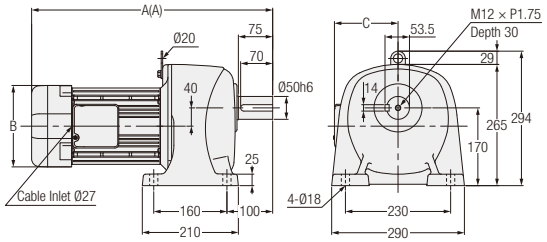

Number of Phases	Power	Part Number	Reduction Ratio	Figure Number	Brake	Approx. Weight (kg)	A	B	C
3-Phase	0.4 kW	G3L50N✱✱✱-MM04T◇◇TN	600, 750, 900, 1200	1	No	52.5	480.5	□137	-
		G3L50N✱✱✱-MM04T◇◇TB◆			Yes	54	500.5	□137	-
	0.75 kW	G3L50N✱✱✱-MR08T◇◇TN	300, 375, 450	2	No	60	533	□154	-
		G3L50N✱✱✱-MR08T◇◇TB◆			Yes	62.5	552	□154	-
	1.5 kW	G3L50N✱✱✱-MR15T◇◇TN	100, 120, 160, 200	3	No	64.5	498	□178	139
		G3L50N✱✱✱-MR15T◇◇TB◆			Yes	68	527	□178	139
	2.2 kW	G3L50N✱✱✱-MR22T◇◇TN	30, 40, 50, 60, 80, 100	3	No	71.5	547.5	□192	149
		G3L50N✱✱✱-MR22T◇◇TB◆			Yes	75	576.5	□192	149

Note: A reduction ratio will be indicated as ✱✱✱ in the nomenclature. In addition, a supply voltage/certification code will be indicated as ◇◇, and a brake specification will be indicated as ◆.

Note: Please refer to page 77 for the performance table.

G3 Type Parallel Shaft | Shaft Diameter **50** | **Foot** Mounting

The values in parentheses ( ) are the indications for gearmotors with brake.

<Figure 1>

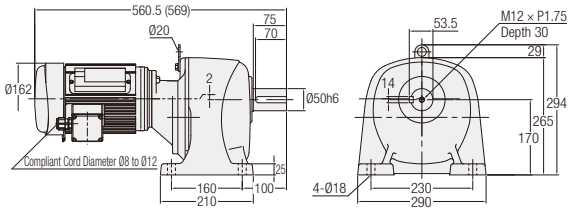

Number of Phases	Power	Part Number	Reduction Ratio	Figure Number	Brake	Approx. Weight (kg)
1-Phase	0.4 kW	G3L50N✻✻✻-MM04C◇JAN	600, 750, 900, 1200	1	No	58
		G3L50N✻✻✻-MM04C◇JAB2			Yes	60.5

Note: A reduction ratio will be indicated as ✻✻✻ in the nomenclature. In addition, a supply voltage code will be indicated as ◇.
Note: Please refer to page 81 for the performance table.

GA Type Parallel Shaft | Shaft Diameter 50 | Foot Mounting

The values in parentheses ( ) are the indications for gearmotors with brake.

<Figure 1>

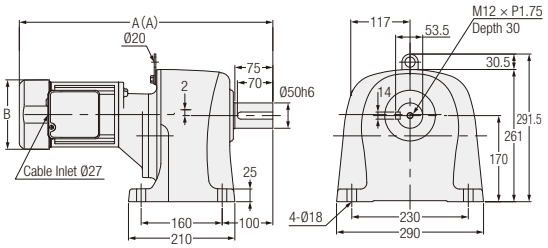

<Figure 2>

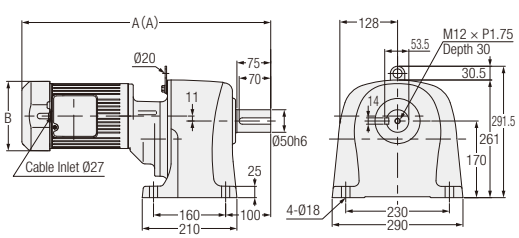

<Figure 3>

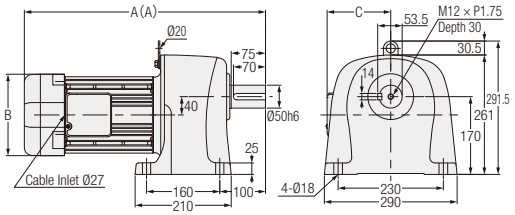

Number of Phases	Power	Part Number	Reduction Ratio	Figure Number	Brake	Approx. Weight (kg)	A	B	C
3-Phase	0.4 kW	GAL50N✱✱✱-MM04T◇◇TN	600, 750, 900, 1200	1	No	33	480.5	□137	-
		GAL50N✱✱✱-MM04T◇◇TB◆			Yes	34.5	500.5	□137	-
	0.75 kW	GAL50N✱✱✱-MR08T◇◇TN	300, 375, 450	2	No	40.5	533	□154	-
		GAL50N✱✱✱-MR08T◇◇TB◆			Yes	43	552	□154	-
	1.5 kW	GAL50N✱✱✱-MR15T◇◇TN	100, 120, 160, 200	3	No	45	498	□178	139
		GAL50N✱✱✱-MR15T◇◇TB◆			Yes	48.5	527	□178	139
	2.2 kW	GAL50N✱✱✱-MR22T◇◇TN	30, 40, 50, 60, 80, 100	3	No	52	547.5	□192	149
		GAL50N✱✱✱-MR22T◇◇TB◆			Yes	55.5	576.5	□192	149

Note: A reduction ratio will be indicated as ✱✱✱ in the nomenclature. In addition, a supply voltage/certification code will be indicated as ◇◇, and a brake specification will be indicated as ◆.

Note: Please refer to page 79 for the performance table.

GA Type Parallel Shaft | Shaft Diameter **50** | **Foot** Mounting

The values in parentheses ( ) are the indications for gearmotors with brake.

<Figure 1>

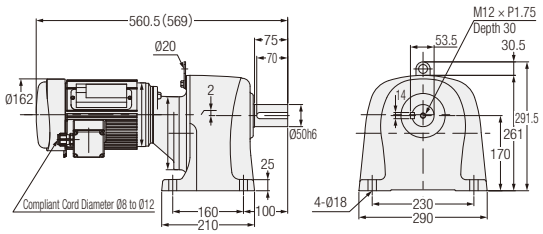

Number of Phases	Power	Part Number	Reduction Ratio	Figure Number	Brake	Approx. Weight (kg)
1-Phase	0.4 kW	GAL50N✻✻✻-MM04C◇JAN	600, 750, 900, 1200	1	No	38.5
		GAL50N✻✻✻-MM04C◇JAB2			Yes	41

Note: A reduction ratio will be indicated as ✻✻✻ in the nomenclature. In addition, a supply voltage code will be indicated as ◇.
Note: Please refer to page 82 for the performance table.

G Type Parallel Shaft | Shaft Diameter 12 | Flange Mounting

The values in parentheses ( ) are the indications for gearmotors with brake.

<Figure 1>

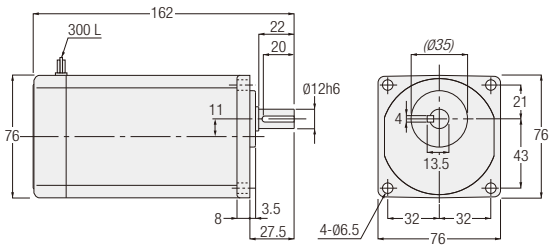

<Figure 2>

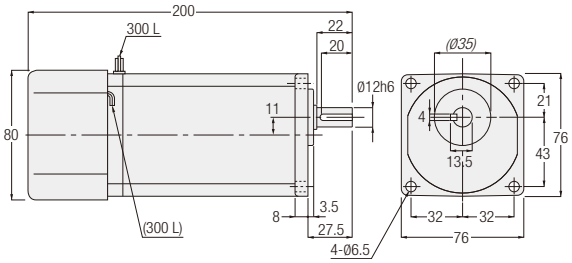

Note: The italic dimension indicates areas with remaining casting surface. Please add 0.5 mm or more to the italic dimension for the diameter of the mating hole.

Number of Phases	Power	Part Number	Reduction Ratio	Figure Number	Brake	Approx. Weight (kg)
3-Phase	15 W	GFM-12-***-T15	5, 7.5, 10, 15, 20, 25, 30, 40, 50, 60, 80, 100, 120, 160, 200, 240	1	No	2
		GFM-12-***-T15W				
		GFMN-12-***-T15	5, 7.5, 10, 15, 20, 25, 30, 40, 50, 60, 80, 100, 120, 160, 200, 240	2	Yes	2
		GFMN-12-***-T15W				
	25 W	GFM-12-***-T25	5, 7.5, 10, 15, 20, 25, 30, 40, 50, 60, 80, 100, 120	1	No	2
		GFM-12-***-T25W				
		GFMN-12-***-T25	5, 7.5, 10, 15, 20, 25, 30, 40, 50, 60, 80, 100, 120	2	Yes	2
		GFMN-12-***-T25W				
	40 W	GFM-12-***-T40	5, 7.5, 10, 15, 20, 25, 30, 40, 50, 60	1	No	2
		GFM-12-***-T40W		2		
		GFMN-12-***-T40	5, 7.5, 10, 15, 20, 25, 30, 40, 50, 60	2	Yes	2
		GFMN-12-***-T40W				
	60 W	GFM-12-***-T60	5, 7.5, 10, 15, 20, 25, 30	2	No	2
		GFMN-12-***-T60			Yes	
1-Phase	15 W	GFM-12-***-S15	5, 7.5, 10, 15, 20, 25, 30, 40, 50, 60, 80, 100, 120, 160, 200, 240	1	No	2
		GFM-12-***-S15W				
		GFMN-12-***-S15	5, 7.5, 10, 15, 20, 25, 30, 40, 50, 60, 80, 100, 120, 160, 200, 240	2	Yes	2
		GFMN-12-***-S15W				
	25 W	GFM-12-***-S25	5, 7.5, 10, 15, 20, 25, 30, 40, 50, 60, 80, 100, 120	1	No	2
		GFM-12-***-S25W				
		GFMN-12-***-S25	5, 7.5, 10, 15, 20, 25, 30, 40, 50, 60, 80, 100, 120	2	Yes	2
		GFMN-12-***-S25W				
	40 W	GFM-12-***-S40	5, 7.5, 10, 15, 20, 25, 30, 40, 50, 60	2	No	2
		GFM-12-***-S40W				
		GFMN-12-***-S40	5, 7.5, 10, 15, 20, 25, 30, 40, 50, 60	2	Yes	2
		GFMN-12-***-S40W				

Note: A reduction ratio will be indicated as *** in the nomenclature.
Note: Please refer to page 73 for the performance table.

G Type Parallel Shaft | Shaft Diameter **15** | **Flange** Mounting

The values in parentheses ( ) are the indications for gearmotors with brake.

<Figure 1>

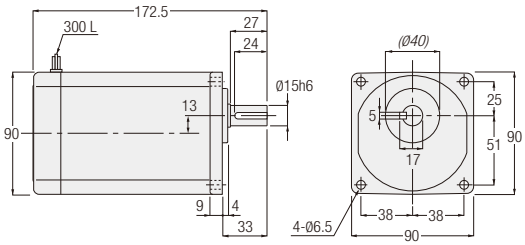

<Figure 2>

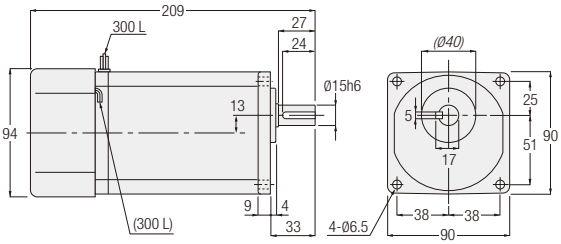

Note: The italic dimension indicates areas with remaining casting surface. Please add 0.5 mm or more to the italic dimension for the diameter of the mating hole.

Number of Phases	Power	Part Number	Reduction Ratio	Figure Number	Brake	Approx. Weight (kg)
3-Phase	25 W	GFM-15-***-T25	160, 200, 240	1	No	3
		GFM-15-***-T25W				
		GFMN-15-***-T25	160, 200, 240	2	Yes	3
		GFMN-15-***-T25W				
	40 W	GFM-15-***-T40	80, 100, 120	1	No	3
		GFM-15-***-T40W				
		GFMN-15-***-T40	80, 100, 120	2	Yes	3
		GFMN-15-***-T40W				
	60 W	GFM-15-***-T60	40, 50, 60	1	No	3
		GFM-15-***-T60W	5, 7.5, 10, 15, 20, 25, 30, 40, 50, 60			
		GFMN-15-***-T60	40, 50, 60	2	Yes	3
		GFMN-15-***-T60W	5, 7.5, 10, 15, 20, 25, 30, 40, 50, 60			
	90 W	GFM-15-***-T90	5, 7.5, 10, 15, 20, 25, 30	1	No	3
		GFM-15-***-T90W		2		
		GFMN-15-***-T90	5, 7.5, 10, 15, 20, 25, 30	2	Yes	3
		GFMN-15-***-T90W				
1-Phase	25 W	GFM-15-***-S25	160, 200, 240	1	No	3
		GFM-15-***-S25W				
		GFMN-15-***-S25	160, 200, 240	2	Yes	3
		GFMN-15-***-S25W				
	40 W	GFM-15-***-S40	80, 100, 120	1	No	3
		GFM-15-***-S40W				
		GFMN-15-***-S40	80, 100, 120	2	Yes	3
		GFMN-15-***-S40W				
	60 W	GFM-15-***-S60	5, 7.5, 10, 15, 20, 25, 30, 40, 50, 60	2	No	3
		GFM-15-***-S60W				
		GFMN-15-***-S60	5, 7.5, 10, 15, 20, 25, 30, 40, 50, 60	2	Yes	3
		GFMN-15-***-S60W				
	90 W	GFM-15-***-S90	5, 7.5, 10, 15, 20, 25, 30	2	No	3
		GFM-15-***-S90W				
		GFMN-15-***-S90	5, 7.5, 10, 15, 20, 25, 30	2	Yes	3
		GFMN-15-***-S90W				

Note: A reduction ratio will be indicated as *** in the nomenclature.
Note: Please refer to page 73 for the performance table.

G Type Parallel Shaft | Shaft Diameter **18** | **Flange** Mounting

The values in parentheses ( ) are the indications for gearmotors with brake.

<Figure 1>

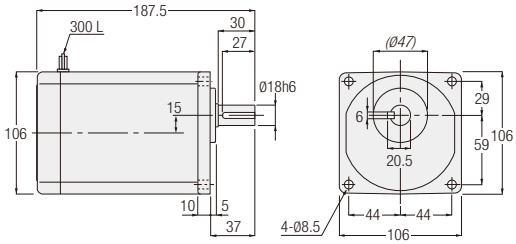

<Figure 2>

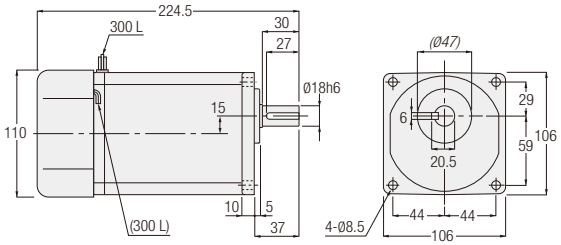

Note: The italic dimension indicates areas with remaining casting surface. Please add 0.5 mm or more to the italic dimension for the diameter of the mating hole.

Number of Phases	Power	Part Number	Reduction Ratio	Figure Number	Brake	Approx. Weight (kg)
3-Phase	40 W	GFM-18-***-T40	160, 200, 240	1	No	4
		GFM-18-***-T40W				
		GFMN-18-***-T40	160, 200, 240	2	Yes	4
		GFMN-18-***-T40W				
	60 W	GFM-18-***-T60	80, 100, 120, 160, 200, 240	1	No	4
		GFM-18-***-T60W				
		GFMN-18-***-T60	80, 100, 120, 160, 200, 240	2	Yes	4
		GFMN-18-***-T60W				
	90 W	GFM-18-***-T90	40, 50, 60, 80, 100, 120, 160, 200, 240	1	No	4
		GFM-18-***-T90W				
		GFMN-18-***-T90	40, 50, 60, 80, 100, 120, 160, 200, 240	2	Yes	4
		GFMN-18-***-T90W				
1-Phase	40 W	GFM-18-***-S40	160, 200, 240	1	No	4
		GFM-18-***-S40W				
		GFMN-18-***-S40	160, 200, 240	2	Yes	4
		GFMN-18-***-S40W				
	60 W	GFM-18-***-S60	80, 100, 120, 160, 200, 240	1	No	4
		GFM-18-***-S60W				
		GFMN-18-***-S60	80, 100, 120, 160, 200, 240	2	Yes	4
		GFMN-18-***-S60W				
	90 W	GFM-18-***-S90	40, 50, 60, 80, 100, 120, 160, 200, 240	2	No	4
		GFM-18-***-S90W				
		GFMN-18-***-S90	40, 50, 60, 80, 100, 120, 160, 200, 240	2	Yes	4
		GFMN-18-***-S90W				

Note: A reduction ratio will be indicated as *** in the nomenclature.
Note: Please refer to page 74 for the performance table.

G3 Type Parallel Shaft | Shaft Diameter **18** | **Flange** Mounting

The values in parentheses ( ) are the indications for gearmotors with brake.

<Figure 1>

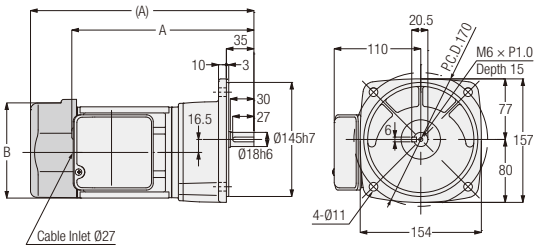

Number of Phases	Power	Part Number	Reduction Ratio	Figure Number	Brake	Approx. Weight (kg)	A	B
3-Phase	0.1 kW	G3F18N✱✱✱-MM01T◇◇TN	5, 10, 15, 20, 25, 30, 40, 50	1	No	6.5	218.5	Ø115
		G3F18N✱✱✱-MM01T◇◇TB◆			Yes	8	258.5	□126
	0.2 kW	G3F18N✱✱✱-MM02T◇◇TN	5, 10, 15, 20, 25	1	No	7	233.5	Ø115
		G3F18N✱✱✱-MM02T◇◇TB◆			Yes	8.5	284	□126

Note: A reduction ratio will be indicated as ✱✱✱ in the nomenclature. In addition, a supply voltage/certification code will be indicated as ◇◇, and a brake specification will be indicated as ◆.

Note: Please refer to page 76 for the performance table.

G3 Type Parallel Shaft | Shaft Diameter **18** | **Flange** Mounting

The values in parentheses ( ) are the indications for gearmotors with brake.

<Figure 1>

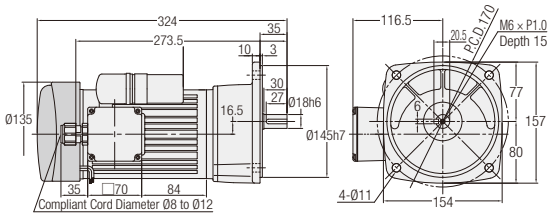

<Figure 2>

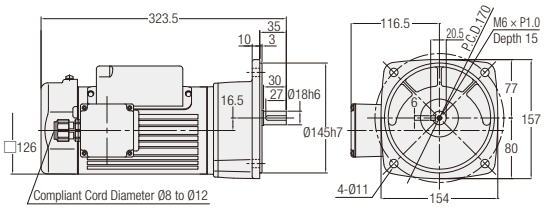

<Figure 3>

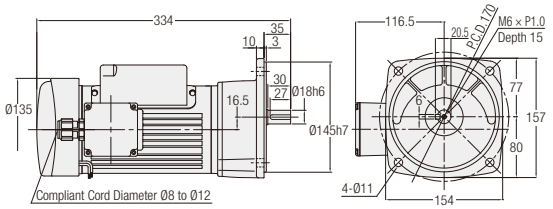

Number of Phases	Power	Part Number	Reduction Ratio	Figure Number	Brake	Approx. Weight (kg)
1-Phase	0.1 kW	G3F18N✱✱✱-MM01C◇JAN	5, 10, 15, 20, 25, 30, 40, 50	1	No	8
		G3F18N✱✱✱-MM01C◇JAB2			Yes	9.5
	0.2 kW	G3F18N✱✱✱-MM02C◇JAN	5, 10, 15, 20, 25	2	No	9
		G3F18N✱✱✱-MM02C◇JAB2		3	Yes	10.5

Note: A reduction ratio will be indicated as ✱✱✱ in the nomenclature. In addition, a supply voltage code will be indicated as ◇.
Note: Please refer to page 80 for the performance table.

G Type Parallel Shaft | Shaft Diameter **22** | **Flange** Mounting

The values in parentheses ( ) are the indications for gearmotors with brake.

<Figure 1>

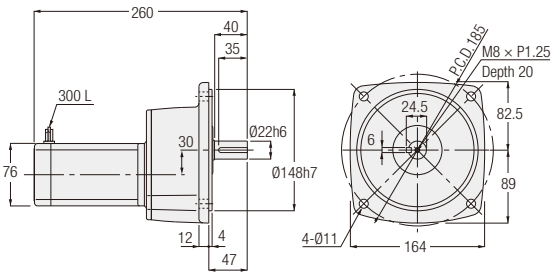

<Figure 2>

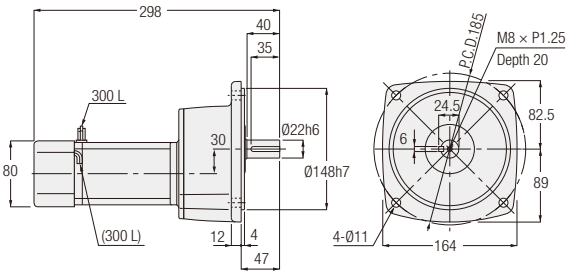

Number of Phases	Power	Part Number	Reduction Ratio	Figure Number	Brake	Approx. Weight (kg)
3-Phase	15 W	GFM-22-✱✱✱-T15	300, 375, 450, 600, 750, 900, 1200, 1500, 1800	1	No	5
		GFM-22-✱✱✱-T15W				
		GFMN-22-✱✱✱-T15	300, 375, 450, 600, 750, 900, 1200, 1500, 1800	2	Yes	5
		GFMN-22-✱✱✱-T15W				
	25 W	GFM-22-✱✱✱-T25	300, 375, 450, 600, 750, 900	1	No	5
		GFM-22-✱✱✱-T25W				
		GFMN-22-✱✱✱-T25	300, 375, 450, 600, 750, 900	2	Yes	5
		GFMN-22-✱✱✱-T25W				
	40 W	GFM-22-✱✱✱-T40	300, 375, 450	1	No	5
		GFM-22-✱✱✱-T40W		2		
		GFMN-22-✱✱✱-T40	300, 375, 450	2	Yes	5
		GFMN-22-✱✱✱-T40W				
	60 W	GFM-22-✱✱✱-T60	300, 375, 450	2	No	5
		GFM-22-✱✱✱-T60W				
		GFMN-22-✱✱✱-T60	300, 375, 450	2	Yes	5
		GFMN-22-✱✱✱-T60W				
1-Phase	15 W	GFM-22-✱✱✱-S15	300, 375, 450, 600, 750, 900, 1200, 1500, 1800	1	No	5
		GFM-22-✱✱✱-S15W				
		GFMN-22-✱✱✱-S15	300, 375, 450, 600, 750, 900, 1200, 1500, 1800	2	Yes	5
		GFMN-22-✱✱✱-S15W				
	25 W	GFM-22-✱✱✱-S25	300, 375, 450, 600, 750, 900	1	No	5
		GFM-22-✱✱✱-S25W				
		GFMN-22-✱✱✱-S25	300, 375, 450, 600, 750, 900	2	Yes	5
		GFMN-22-✱✱✱-S25W				
	40 W	GFM-22-✱✱✱-S40	300, 375, 450	2	No	5
		GFM-22-✱✱✱-S40W				
		GFMN-22-✱✱✱-S40	300, 375, 450	2	Yes	5
		GFMN-22-✱✱✱-S40W				
	60 W	GFM-22-✱✱✱-S60	300, 375, 450	2	No	5
		GFM-22-✱✱✱-S60W				
		GFMN-22-✱✱✱-S60	300, 375, 450	2	Yes	5
		GFMN-22-✱✱✱-S60W				

Note: A reduction ratio will be indicated as ✱✱✱ in the nomenclature.
Note: Please refer to page 73 for the performance table.

G3 Type Parallel Shaft | Shaft Diameter 22 | Flange Mounting

The values in parentheses ( ) are the indications for gearmotors with brake.

<Figure 1>

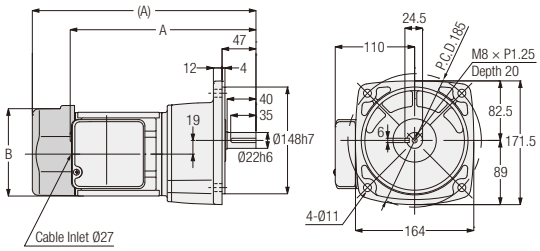

<Figure 2>

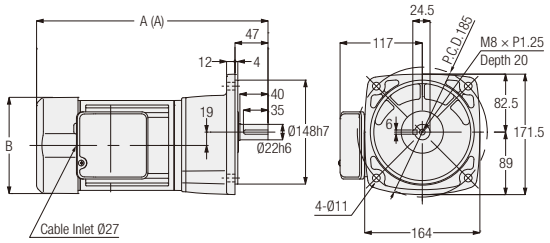

Number of Phases	Power	Part Number	Reduction Ratio	Figure Number	Brake	Approx. Weight (kg)	A	B
3-Phase	0.1 kW	G3F22N✱✱✱-MM01T◇◇TN	60, 80, 100, 120, 160, 200	1	No	7.5	244.5	Ø115
		G3F22N✱✱✱-MM01T◇◇TB◆			Yes	9	284.5	□126
	0.2 kW	G3F22N✱✱✱-MM02T◇◇TN	30, 40, 50, 60, 80, 100	1	No	8	259.5	Ø115
		G3F22N✱✱✱-MM02T◇◇TB◆			Yes	9.5	310	□126
	0.4 kW	G3F22N✱✱✱-MM04T◇◇TN	5, 10, 15, 20, 25	2	No	10	309.5	□137
		G3F22N✱✱✱-MM04T◇◇TB◆			Yes	11.5	329.5	□137

Note: A reduction ratio will be indicated as ✱✱✱ in the nomenclature. In addition, a supply voltage/certification code will be indicated as ◇◇, and a brake specification will be indicated as ◆.

Note: Please refer to page 76 for the performance table.

G3 Type Parallel Shaft | Shaft Diameter **22** | **Flange** Mounting

The values in parentheses ( ) are the indications for gearmotors with brake.

<Figure 1>

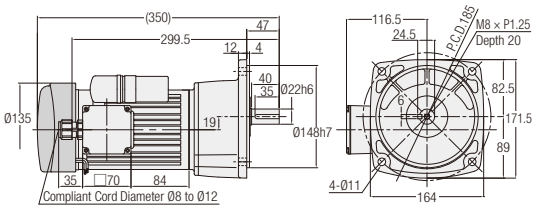

<Figure 2>

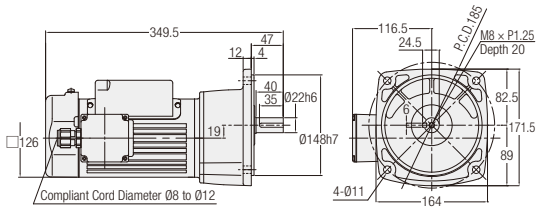

<Figure 3>

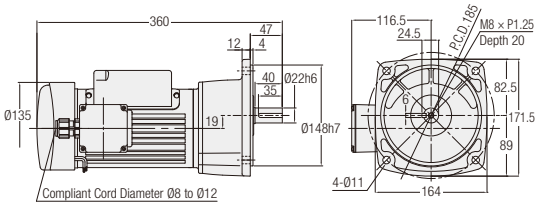

<Figure 4>

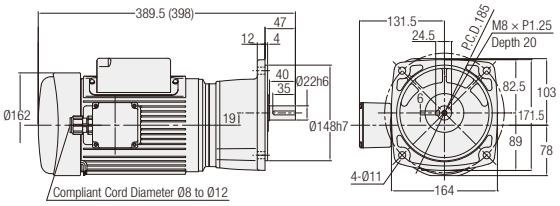

Number of Phases	Power	Part Number	Reduction Ratio	Figure Number	Brake	Approx. Weight (kg)
1-Phase	0.1 kW	G3F22N✱✱✱-MM01C◇JAN	60, 80, 100, 120, 160, 200	1	No	9
		G3F22N✱✱✱-MM01C◇JAB2			Yes	10.5
	0.2 kW	G3F22N✱✱✱-MM02C◇JAN	30, 40, 50, 60, 80, 100	2	No	10
		G3F22N✱✱✱-MM02C◇JAB2		3	Yes	11.5
	0.4 kW	G3F22N✱✱✱-MM04C◇JAN	5, 10, 15, 20, 25	4	No	15.5
		G3F22N✱✱✱-MM04C◇JAB2			Yes	18

Note: A reduction ratio will be indicated as ✱✱✱ in the nomenclature. In addition, a supply voltage code will be indicated as ◇.
Note: Please refer to page 80 for the performance table.

G Type Parallel Shaft | Shaft Diameter 28 | Flange Mounting

The values in parentheses ( ) are the indications for gearmotors with brake.

<Figure 1>

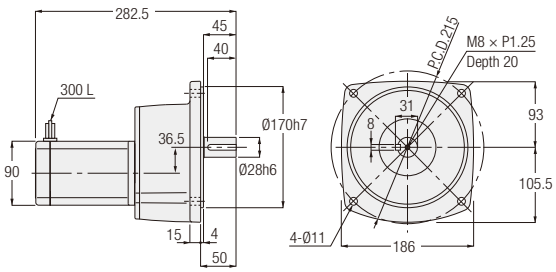

<Figure 2>

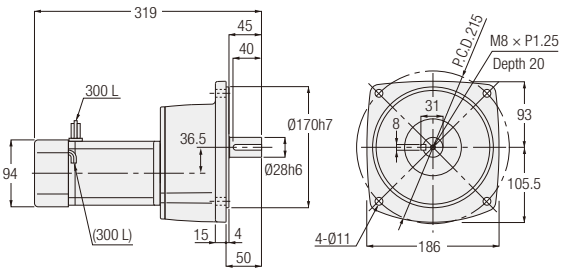

Number of Phases	Power	Part Number	Reduction Ratio	Figure Number	Brake	Approx. Weight (kg)
3-Phase	25 W	GFM-28-***-T25	1200, 1500, 1800	1	No	7
		GFM-28-***-T25W				
		GFMN-28-***-T25	1200, 1500, 1800	2	Yes	7
		GFMN-28-***-T25W				
	40 W	GFM-28-***-T40	600, 750, 900	1	No	7
		GFM-28-***-T40W				
		GFMN-28-***-T40	600, 750, 900	2	Yes	7
		GFMN-28-***-T40W				
	60 W	GFM-28-***-T60	600, 750, 900	1	No	7
		GFM-28-***-T60W				
		GFMN-28-***-T60	600, 750, 900	2	Yes	7
		GFMN-28-***-T60W				
	90 W	GFM-28-***-T90	300, 375, 450	1	No	7
		GFM-28-***-T90W		2		
		GFMN-28-***-T90	300, 375, 450	2	Yes	7
		GFMN-28-***-T90W				
1-Phase	25 W	GFM-28-***-S25	1200, 1500, 1800	1	No	7
		GFM-28-***-S25W				
		GFMN-28-***-S25	1200, 1500, 1800	2	Yes	7
		GFMN-28-***-S25W				
	40 W	GFM-28-***-S40	600, 750, 900	2	No	7
		GFM-28-***-S40W				
		GFMN-28-***-S40	600, 750, 900	2	Yes	7
		GFMN-28-***-S40W				
	60 W	GFM-28-***-S60	600, 750, 900	2	No	7
		GFM-28-***-S60W				
		GFMN-28-***-S60	600, 750, 900	2	Yes	7
		GFMN-28-***-S60W				
	90 W	GFM-28-***-S90	300, 375, 450	2	No	7
		GFM-28-***-S90W				
		GFMN-28-***-S90	300, 375, 450	2	Yes	7
		GFMN-28-***-S90W				

Note: A reduction ratio will be indicated as *** in the nomenclature.
Note: Please refer to page 73 for the performance table.

G3 Type Parallel Shaft | Shaft Diameter 28 | **Flange** Mounting

The values in parentheses ( ) are the indications for gearmotors with brake.

<Figure 1>

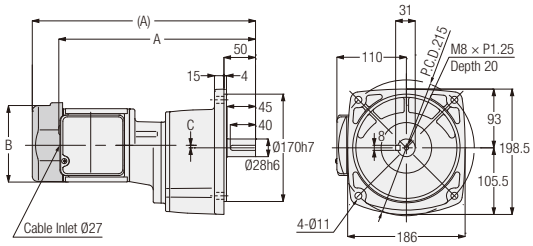

<Figure 2>

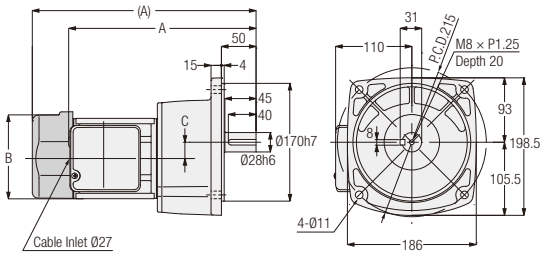

<Figure 3>

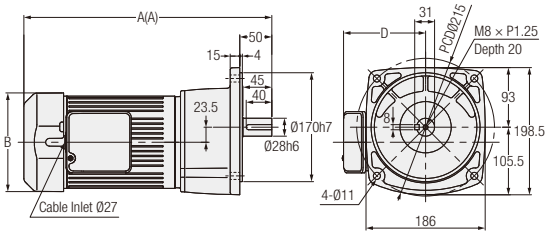

Number of Phases	Power	Part Number	Reduction Ratio	Figure Number	Brake	Approx. Weight (kg)	A	B	C	D
3-Phase	0.1 kW	G3F28N✱✱✱-MM01T◇◇TN	300, 375, 450	1	No	10.5	313.5	Ø115	4	-
		G3F28N✱✱✱-MM01T◇◇TB◆			Yes	12	353.5	□126	4	-
	0.2 kW	G3F28N✱✱✱-MM02T◇◇TN	100, 120, 160, 200	2	No	10	272.5	Ø115	23.5	-
		G3F28N✱✱✱-MM02T◇◇TB◆			Yes	11.5	323	□126	23.5	-
	0.4 kW	G3F28N✱✱✱-MM04T◇◇TN	30, 40, 50, 60, 80, 100	3	No	12	325.5	□137	-	117
		G3F28N✱✱✱-MM04T◇◇TB◆			Yes	13.5	345.5	□137	-	117
	0.75 kW	G3F28N✱✱✱-MR08T◇◇TN	5, 10, 15, 20, 25	3	No	19	368	□154	-	128
		G3F28N✱✱✱-MR08T◇◇TB◆			Yes	21.5	387	□154	-	128

Note: A reduction ratio will be indicated as ✱✱✱ in the nomenclature. In addition, a supply voltage/certification code will be indicated as ◇◇, and a brake specification will be indicated as ◆.

Note: Please refer to page 76 for the performance table.

G3 Type Parallel Shaft | Shaft Diameter 28 | Flange Mounting

The values in parentheses ( ) are the indications for gearmotors with brake.

<Figure 1>

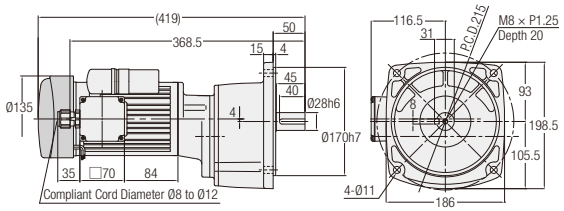

<Figure 2>

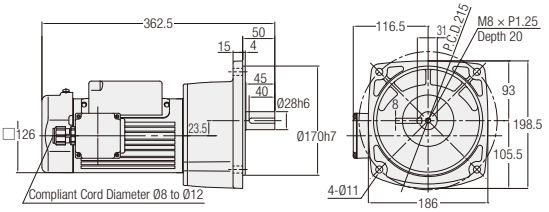

<Figure 3>

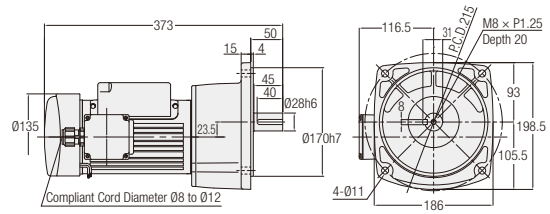

<Figure 4>

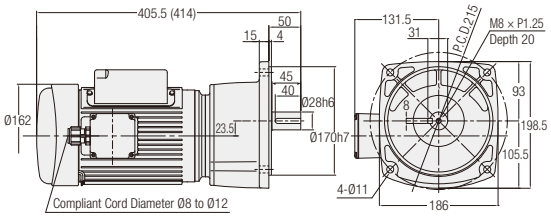

Number of Phases	Power	Part Number	Reduction Ratio	Figure Number	Brake	Approx. Weight (kg)
1-Phase	0.1 kW	G3F28N✱✱✱-MM01C◇JAN	300, 375, 450	1	No	12
		G3F28N✱✱✱-MM01C◇JAB2			Yes	13.5
	0.2 kW	G3F28N✱✱✱-MM02C◇JAN	100, 120, 160, 200	2	No	12
		G3F28N✱✱✱-MM02C◇JAB2		3	Yes	13.5
	0.4 kW	G3F28N✱✱✱-MM04C◇JAN	30, 40, 50, 60, 80, 100	4	No	17.5
		G3F28N✱✱✱-MM04C◇JAB2			Yes	20

Note: A reduction ratio will be indicated as ✱✱✱ in the nomenclature. In addition, a supply voltage code will be indicated as ◇.
Note: Please refer to page 80 for the performance table.

G Type Parallel Shaft | Shaft Diameter **32** | **Flange** Mounting

The values in parentheses ( ) are the indications for gearmotors with brake.

<Figure 1>

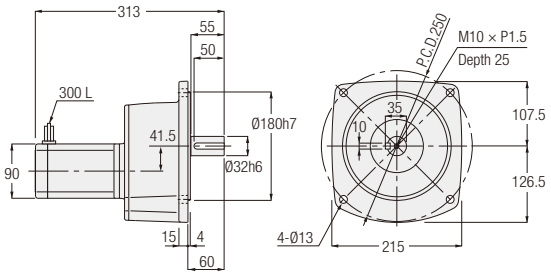

<Figure 2>

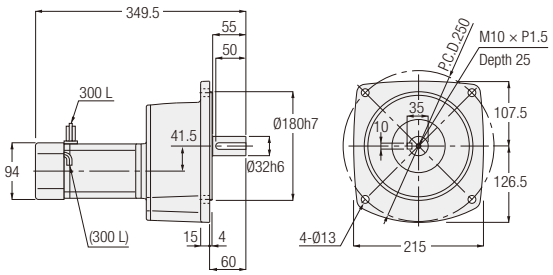

Number of Phases	Power	Part Number	Reduction Ratio	Figure Number	Brake	Approx. Weight (kg)
3-Phase	40 W	GFM-32-✱✱✱-T40	1200, 1500, 1800	1	No	11
		GFM-32-✱✱✱-T40W				
		GFMN-32-✱✱✱-T40	1200, 1500, 1800	2	Yes	11
		GFMN-32-✱✱✱-T40W				
	60 W	GFM-32-✱✱✱-T60	1200, 1500, 1800	1	No	11
		GFM-32-✱✱✱-T60W				
		GFMN-32-✱✱✱-T60	1200, 1500, 1800	2	Yes	11
		GFMN-32-✱✱✱-T60W				
	90 W	GFM-32-✱✱✱-T90	600, 750, 900	1	No	11
		GFM-32-✱✱✱-T90W		2		
		GFMN-32-✱✱✱-T90	600, 750, 900	2	Yes	11
		GFMN-32-✱✱✱-T90W				
1-Phase	40 W	GFM-32-✱✱✱-S40	1200, 1500, 1800	1	No	11
		GFM-32-✱✱✱-S40W				
		GFMN-32-✱✱✱-S40	1200, 1500, 1800	2	Yes	11
		GFMN-32-✱✱✱-S40W				
	60 W	GFM-32-✱✱✱-S60	1200, 1500, 1800	2	No	11
		GFM-32-✱✱✱-S60W				
		GFMN-32-✱✱✱-S60	1200, 1500, 1800	2	Yes	11
		GFMN-32-✱✱✱-S60W				
	90 W	GFM-32-✱✱✱-S90	600, 750, 900	2	No	11
		GFM-32-✱✱✱-S90W				
		GFMN-32-✱✱✱-S90	600, 750, 900	2	Yes	11
		GFMN-32-✱✱✱-S90W				

Note: A reduction ratio will be indicated as ✱✱✱ in the nomenclature.
Note: Please refer to page 74 for the performance table.

G3 Type Parallel Shaft | Shaft Diameter 32 | Flange Mounting

The values in parentheses ( ) are the indications for gearmotors with brake.

<Figure 1>

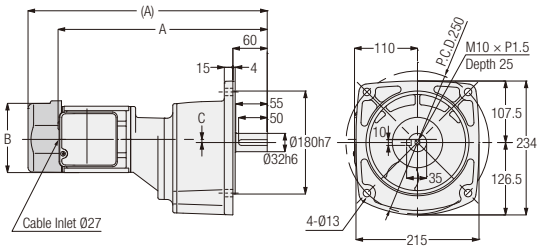

<Figure 2>

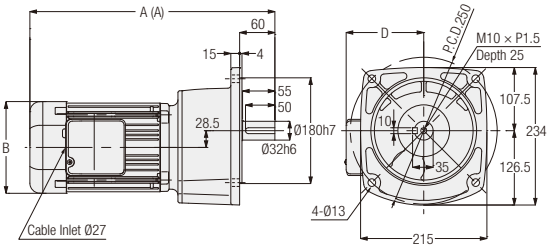

<Figure 3>

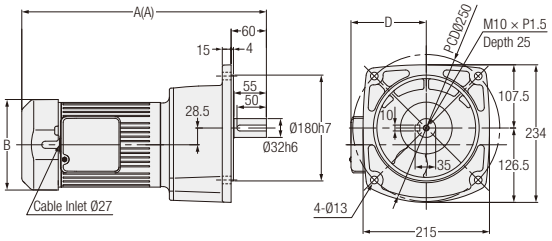

Number of Phases	Power	Part Number	Reduction Ratio	Figure Number	Brake	Approx. Weight (kg)	A	B	C	D
3-Phase	0.1 kW	G3F32N✱✱✱-MM01T◇◇TN	600, 750, 900, 1200	1	No	13.5	332.5	Ø115	-1	-
		G3F32N✱✱✱-MM01T◇◇TB◆			Yes	15	372.5	□126	-1	-
	0.2 kW	G3F32N✱✱✱-MM02T◇◇TN	300, 375, 450	1	No	14	367.5	Ø115	5.5	-
		G3F32N✱✱✱-MM02T◇◇TB◆			Yes	15.5	418	□126	5.5	-
	0.4 kW	G3F32N✱✱✱-MM04T◇◇TN	100, 120, 160, 200	2	No	15	344.5	□137	-	117
		G3F32N✱✱✱-MM04T◇◇TB◆			Yes	16.5	364.5	□137	-	117
	0.75 kW	G3F32N✱✱✱-MR08T◇◇TN	30, 40, 50, 60, 80, 100	3	No	22.5	397	□154	-	128
		G3F32N✱✱✱-MR08T◇◇TB◆			Yes	25	416	□154	-	128
	1.5 kW	G3F32N✱✱✱-MR15T◇◇TN	5, 10, 15, 20, 25	3	No	28.5	433	□178	-	139
		G3F32N✱✱✱-MR15T◇◇TB◆			Yes	32	462	□178	-	139

Note: A reduction ratio will be indicated as ✱✱✱ in the nomenclature. In addition, a supply voltage/certification code will be indicated as ◇◇, and a brake specification will be indicated as ◆.

Note: Please refer to page 76 for the performance table.

G3 Type Parallel Shaft | Shaft Diameter 32 | **Flange** Mounting

The values in parentheses ( ) are the indications for gearmotors with brake.

<Figure 1>

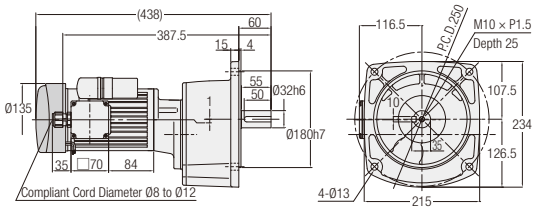

<Figure 2>

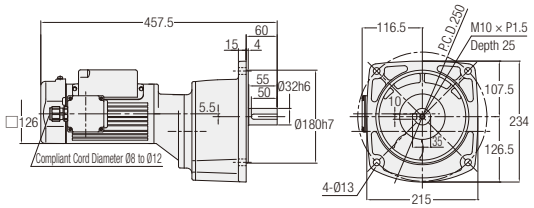

<Figure 3>

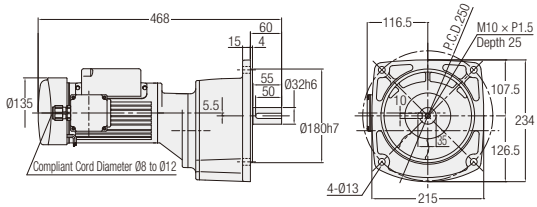

<Figure 4>

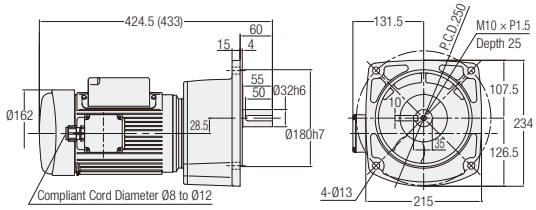

Number of Phases	Power	Part Number	Reduction Ratio	Figure Number	Brake	Approx. Weight (kg)
1-Phase	0.1 kW	G3F32N✱✱✱-MM01C◇JAN	600, 750, 900, 1200	1	No	15
		G3F32N✱✱✱-MM01C◇JAB2			Yes	16.5
	0.2 kW	G3F32N✱✱✱-MM02C◇JAN	300, 375, 450	2	No	16
		G3F32N✱✱✱-MM02C◇JAB2		3	Yes	17.5
	0.4 kW	G3F32N✱✱✱-MM04C◇JAN	100, 120, 160, 200	4	No	20.5
		G3F32N✱✱✱-MM04C◇JAB2			Yes	23

Note: A reduction ratio will be indicated as ✱✱✱ in the nomenclature. In addition, a supply voltage code will be indicated as ◇.
Note: Please refer to page 80 for the performance table.

G Type Parallel Shaft | Shaft Diameter 40 | Flange Mounting

The values in parentheses ( ) are the indications for gearmotors with brake.

<Figure 1>

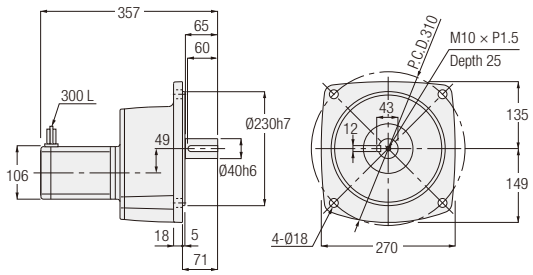

<Figure 2>

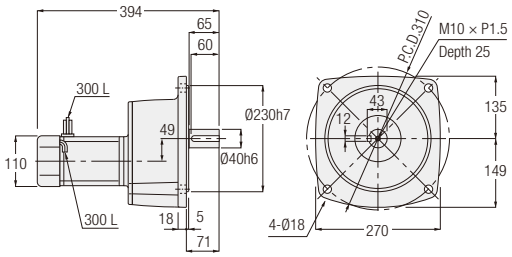

Number of Phases	Power	Part Number	Reduction Ratio	Figure Number	Brake	Approx. Weight (kg)
3-Phase	90 W	GFM-40-***-T90	1200, 1500, 1800	1	No	15
		GFM-40-***-T90W				
		GFMN-40-***-T90	1200, 1500, 1800	2	Yes	15
		GFMN-40-***-T90W				
1-Phase	90 W	GFM-40-***-S90	1200, 1500, 1800	2	No	15
		GFM-40-***-S90W				
		GFMN-40-***-S90	1200, 1500, 1800	2	Yes	15
		GFMN-40-***-S90W				

Note: A reduction ratio will be indicated as *** in the nomenclature.
Note: Please refer to page 75 for the performance table.

G3 Type Parallel Shaft | Shaft Diameter **40** | **Flange** Mounting

The values in parentheses ( ) are the indications for gearmotors with brake.

<Figure 1>

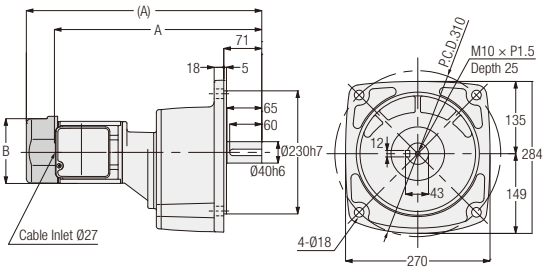

<Figure 2>

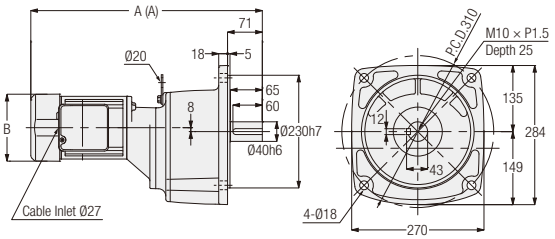

<Figure 3>

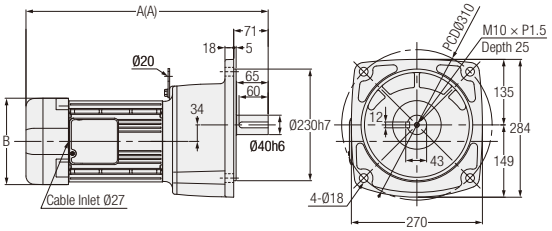

Note: Gearmotors with a motor power of 0.75 kW does not include the hanging plate.

Number of Phases	Power	Part Number	Reduction Ratio	Figure Number	Brake	Approx. Weight (kg)	A	B
3-Phase	0.2 kW	G3F40N✱✱✱-MM02T◇◇TN	600, 750, 900, 1200	1	No	21.5	389.5	Ø115
		G3F40N✱✱✱-MM02T◇◇TB◆			Yes	23	440	□126
	0.4 kW	G3F40N✱✱✱-MM04T◇◇TN	300, 375, 450	2	No	24.5	452.5	□137
		G3F40N✱✱✱-MM04T◇◇TB◆			Yes	26	472.5	□137
	0.75 kW	G3F40N✱✱✱-MR08T◇◇TN	100, 120, 160, 200	3	No	30	419	□154
		G3F40N✱✱✱-MR08T◇◇TB◆			Yes	32.5	438	□154
	1.5 kW	G3F40N✱✱✱-MR15T◇◇TN	30, 40, 50, 60, 80, 100	3	No	36.5	470	□178
		G3F40N✱✱✱-MR15T◇◇TB◆			Yes	40	499	□178
	2.2 kW	G3F40N✱✱✱-MR22T◇◇TN	5, 10, 15, 20, 25	3	No	43	503.5	□192
		G3F40N✱✱✱-MR22T◇◇TB◆			Yes	46.5	532.5	□192

Note: A reduction ratio will be indicated as ✱✱✱ in the nomenclature. In addition, a supply voltage/certification code will be indicated as ◇◇, and a brake specification will be indicated as ◆.

Note: Please refer to page 76 for the performance table.

G3 Type Parallel Shaft | Shaft Diameter 40 | Flange Mounting

<Figure 1>

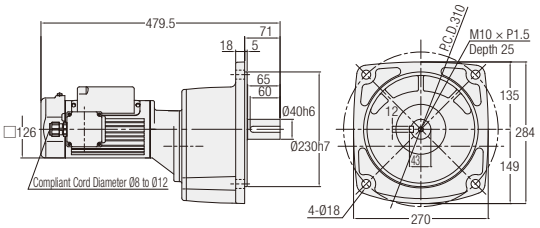

<Figure 2>

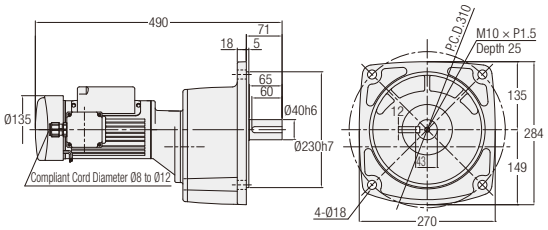

<Figure 3>

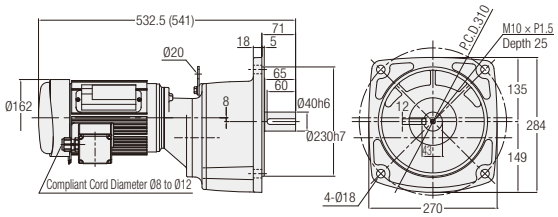

Number of Phases	Power	Part Number	Reduction Ratio	Figure Number	Brake	Approx. Weight (kg)
1-Phase	0.2 kW	G3F40N✱✱✱-MM02C◇JAN	600, 750, 900, 1200	1	No	23.5
		G3F40N✱✱✱-MM02C◇JAB2		2	Yes	25
	0.4 kW	G3F40N✱✱✱-MM04C◇JAN	300, 375, 450	3	No	30
		G3F40N✱✱✱-MM04C◇JAB2			Yes	32.5

Note: A reduction ratio will be indicated as ✱✱✱ in the nomenclature. In addition, a supply voltage code will be indicated as ◇.
Note: Please refer to page 80 for the performance table.

G3 Type Parallel Shaft | Shaft Diameter **50** | **Flange** Mounting

The values in parentheses ( ) are the indications for gearmotors with brake.

<Figure 1>

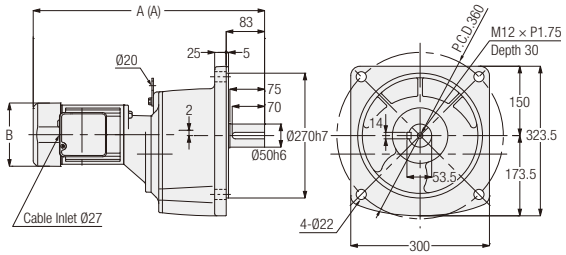

<Figure 2>

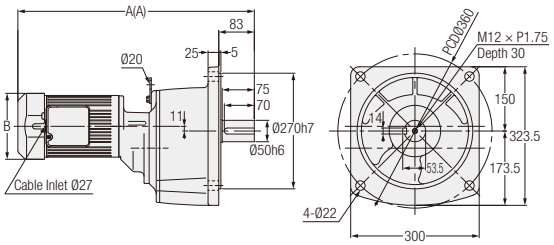

<Figure 3>

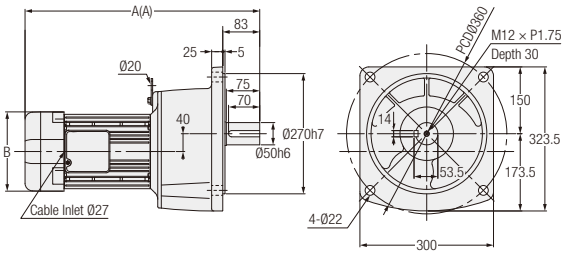

552	Power	Part Number	Reduction Ratio	Figure Number	Brake	Approx. Weight (kg)	A	B
3-Phase	0.4 kW	G3F50N✱✱✱-MM04T◇◇TN	600, 750, 900, 1200	1	No	57.5	480.5	□137
		G3F50N✱✱✱-MM04T◇◇TB◆			Yes	59	500.5	□137
	0.75 kW	G3F50N✱✱✱-MR08T◇◇TN	300, 375, 450	2	No	65	533	□154
		G3F50N✱✱✱-MR08T◇◇TB◆			Yes	67.5	552	□154
	1.5 kW	G3F50N✱✱✱-MR15T◇◇TN	100, 120, 160, 200	3	No	69.5	498	□178
		G3F50N✱✱✱-MR15T◇◇TB◆			Yes	73	527	□178
	2.2 kW	G3F50N✱✱✱-MR22T◇◇TN	30, 40, 50, 60, 80, 100	3	No	76.5	547.5	□192
		G3F50N✱✱✱-MR22T◇◇TB◆			Yes	80	576.5	□192

Note: A reduction ratio will be indicated as ✱✱✱ in the nomenclature. In addition, a supply voltage/certification code will be indicated as ◇◇, and a brake specification will be indicated as ◆.

Note: Please refer to page 77 for the performance table.

G3 Type Parallel Shaft | Shaft Diameter 50 | Flange Mounting

The values in parentheses ( ) are the indications for gearmotors with brake.

<Figure 1>

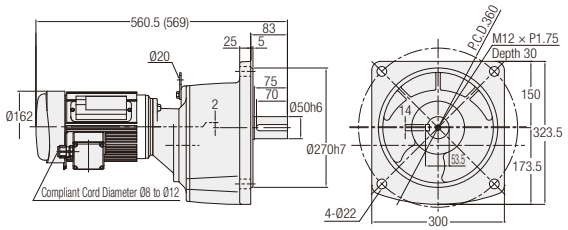

Number of Phases	Power	Part Number	Reduction Ratio	Figure Number	Brake	Approx. Weight (kg)
1-Phase	0.4 kW	G3F50N✱✱✱-MM04C◇JAN	600, 750, 900, 1200	1	No	63
		G3F50N✱✱✱-MM04C◇JAB2			Yes	65.5

Note: A reduction ratio will be indicated as ✱✱✱ in the nomenclature. In addition, a supply voltage code will be indicated as ◇.
Note: Please refer to page 81 for the performance table.

G3 Type Parallel Shaft | Shaft Diameter 18 | Small Flange Mounting

<Figure 2>

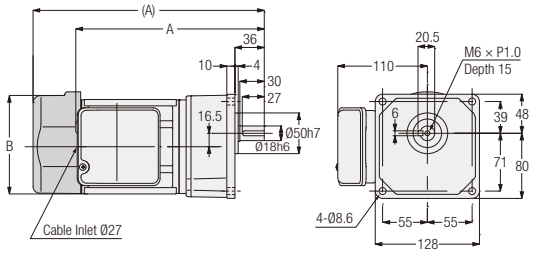

Number of Phases	Power	Part Number	Reduction Ratio	Figure Number	Brake	Approx. Weight (kg)	A	B
3-Phase	0.1 kW	G3K18N✱✱✱-MM01T◇◇TN	5, 10, 15, 20, 25, 30, 40, 50	2	No	6.5	218.5	Ø115
		G3K18N✱✱✱-MM01T◇◇TB◆			Yes	8	258.5	□126
	0.2 kW	G3K18N✱✱✱-MM02T◇◇TN	5, 10, 15, 20, 25	2	No	7	233.5	Ø115
		G3K18N✱✱✱-MM02T◇◇TB◆			Yes	8.5	284	□126

Note: A reduction ratio will be indicated as ✱✱✱ in the nomenclature. In addition, a supply voltage/certification code will be indicated as ◇◇, and a brake specification will be indicated as ◆.
Note: Please refer to page 76 for the performance table.

G3 Type Parallel Shaft | Shaft Diameter **18** | **Small Flange** Mounting

The values in parentheses ( ) are the indications for gearmotors with brake.

<Figure 1>

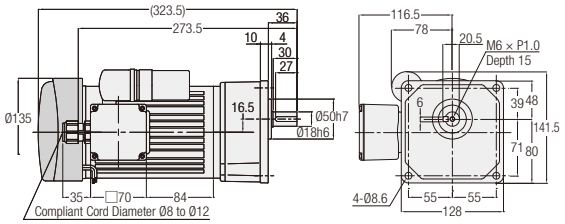

<Figure 2>

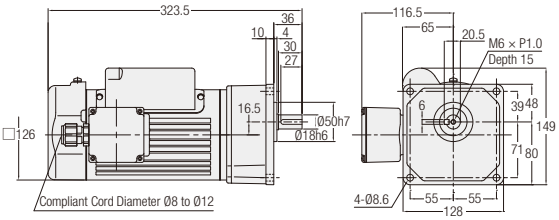

<Figure 3>

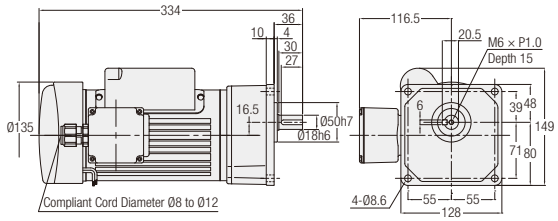

Number of Phases	Power	Part Number	Reduction Ratio	Figure Number	Brake	Approx. Weight (kg)
1-Phase	0.1 kW	G3K18N✱✱✱-MM01C◇JAN	5, 10, 15, 20, 25, 30, 40, 50	1	No	8
		G3K18N✱✱✱-MM01C◇JAB2			Yes	9.5
	0.2 kW	G3K18N✱✱✱-MM02C◇JAN	5, 10, 15, 20, 25	2	No	9
		G3K18N✱✱✱-MM02C◇JAB2		3	Yes	10.5

Note: A reduction ratio will be indicated as ✱✱✱ in the nomenclature. In addition, a supply voltage code will be indicated as ◇.
Note: Please refer to page 80 for the performance table.

G Type Parallel Shaft | Shaft Diameter 22 | Small Flange Mounting

The values in parentheses ( ) are the indications for gearmotors with brake.

<Figure 1>

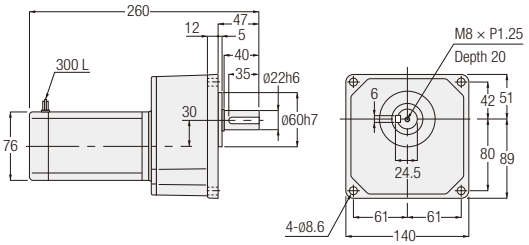

<Figure 2>

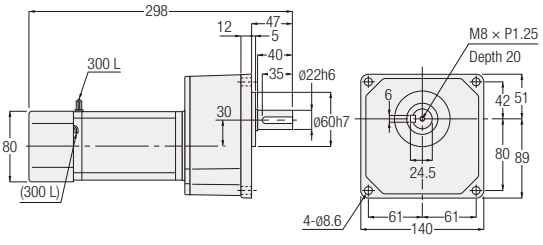

Number of Phases	Power	Part Number	Reduction Ratio	Figure Number	Brake	Approx. Weight (kg)
3-Phase	15 W	GKM-22-***-T15	300, 375, 450, 600, 750, 900, 1200, 1500, 1800	1	No	5
		GKM-22-***-T15W				
		GKMN-22-***-T15	300, 375, 450, 600, 750, 900, 1200, 1500, 1800	2	Yes	5
		GKMN-22-***-T15W				
	25 W	GKM-22-***-T25	300, 375, 450, 600, 750, 900	1	No	5
		GKM-22-***-T25W				
		GKMN-22-***-T25	300, 375, 450, 600, 750, 900	2	Yes	5
		GKMN-22-***-T25W				
	40 W	GKM-22-***-T40	300, 375, 450	1	No	5
		GKM-22-***-T40W		2		
		GKMN-22-***-T40	300, 375, 450	2	Yes	5
		GKMN-22-***-T40W				
	60 W	GKM-22-***-T60	300, 375, 450	2	No	5
		GKM-22-***-T60W				
		GKMN-22-***-T60	300, 375, 450	2	Yes	5
		GKMN-22-***-T60W				
1-Phase	15 W	GKM-22-***-S15	300, 375, 450, 600, 750, 900, 1200, 1500, 1800	1	No	5
		GKM-22-***-S15W				
		GKMN-22-***-S15	300, 375, 450, 600, 750, 900, 1200, 1500, 1800	2	Yes	5
		GKMN-22-***-S15W				
	25 W	GKM-22-***-S25	300, 375, 450, 600, 750, 900	1	No	5
		GKM-22-***-S25W				
		GKMN-22-***-S25	300, 375, 450, 600, 750, 900	2	Yes	5
		GKMN-22-***-S25W				
	40 W	GKM-22-***-S40	300, 375, 450	2	No	5
		GKM-22-***-S40W				
		GKMN-22-***-S40	300, 375, 450	2	Yes	5
		GKMN-22-***-S40W				
	60 W	GKM-22-***-S60	300, 375, 450	2	No	5
		GKM-22-***-S60W				
		GKMN-22-***-S60	300, 375, 450	2	Yes	5
		GKMN-22-***-S60W				

Note: A reduction ratio will be indicated as *** in the nomenclature.
Note: Please refer to page 73 for the performance table.

G3 Type Parallel Shaft | Shaft Diameter **22** | **Small Flange** Mounting

The values in parentheses ( ) are the indications for gearmotors with brake.

<Figure 1>

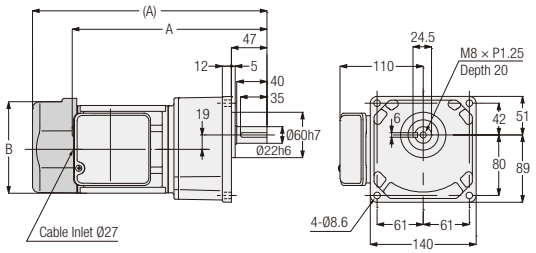

<Figure 2>

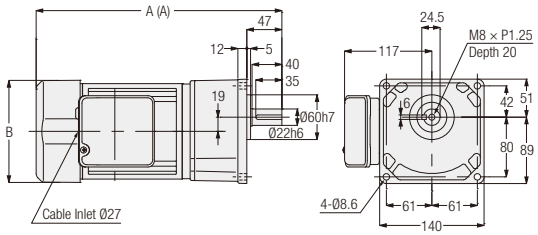

Number of Phases	Power	Part Number	Reduction Ratio	Figure Number	Brake	Approx. Weight (kg)	A	B
3-Phase	0.1 kW	G3K22N✱✱✱-MM01T◇◇TN	60, 80, 100, 120, 160, 200	1	No	7.5	244.5	Ø115
		G3K22N✱✱✱-MM01T◇◇TB◆			Yes	9	284.5	□126
	0.2 kW	G3K22N✱✱✱-MM02T◇◇TN	30, 40, 50, 60, 80, 100	1	No	8	259.5	Ø115
		G3K22N✱✱✱-MM02T◇◇TB◆			Yes	9.5	310	□126
	0.4 kW	G3K22N✱✱✱-MM04T◇◇TN	5, 10, 15, 20, 25	2	No	10	309.5	□137
		G3K22N✱✱✱-MM04T◇◇TB◆			Yes	11.5	329.5	□137

Note: A reduction ratio will be indicated as ✱✱✱ in the nomenclature. In addition, a supply voltage/certification code will be indicated as ◇◇, and a brake specification will be indicated as ◆.

Note: Please refer to page 76 for the performance table.

G3 Type Parallel Shaft | Shaft Diameter 22 | Small Flange Mounting

The values in parentheses ( ) are the indications for gearmotors with brake.

<Figure 1>

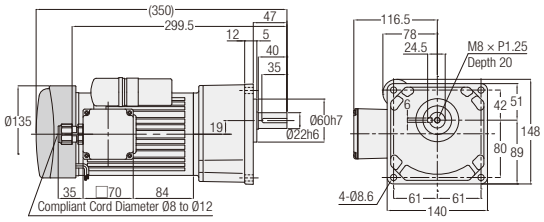

<Figure 2>

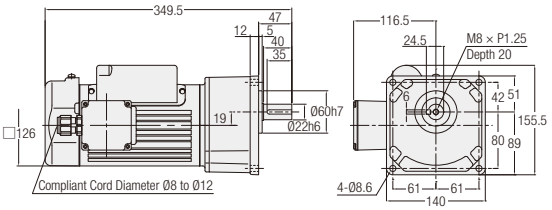

<Figure 3>

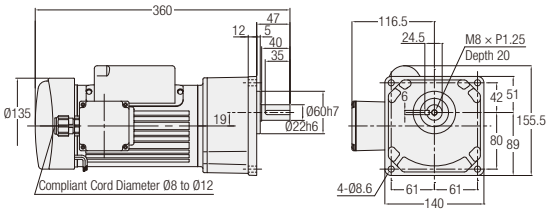

<Figure 4>

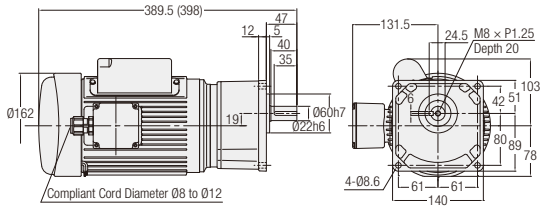

Number of Phases	Power	Part Number	Reduction Ratio	Figure Number	Brake	Approx. Weight (kg)
1-Phase	0.1 kW	G3K22N✱✱✱-MM01C◇JAN	60, 80, 100, 120, 160, 200	1	No	9
		G3K22N✱✱✱-MM01C◇JAB2			Yes	10.5
	0.2 kW	G3K22N✱✱✱-MM02C◇JAN	30, 40, 50, 60, 80, 100	2	No	10
		G3K22N✱✱✱-MM02C◇JAB2		3	Yes	11.5
	0.4 kW	G3K22N✱✱✱-MM04C◇JAN	5, 10, 15, 20, 25	4	No	15.5
		G3K22N✱✱✱-MM04C◇JAB2			Yes	18

Note: A reduction ratio will be indicated as ✱✱✱ in the nomenclature. In addition, a supply voltage code will be indicated as ◇.
Note: Please refer to page 80 for the performance table.

G Type Parallel Shaft | Shaft Diameter **28** | **Small Flange** Mounting

The values in parentheses ( ) are the indications for gearmotors with brake.

<Figure 1>

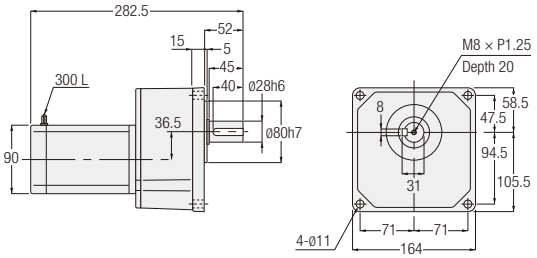

<Figure 2>

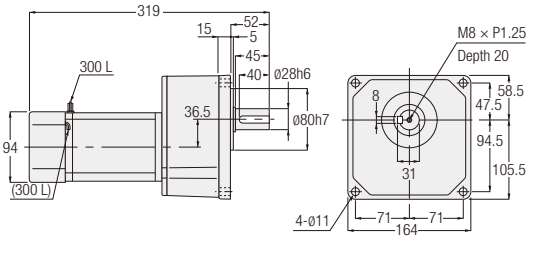

Number of Phases	Power	Part Number	Reduction Ratio	Figure Number	Brake	Approx. Weight (kg)
3-Phase	25 W	GKM-28-***-T25	1200, 1500, 1800	1	No	7
		GKM-28-***-T25W				
		GKMN-28-***-T25	1200, 1500, 1800	2	Yes	7
		GKMN-28-***-T25W				
	40 W	GKM-28-***-T40	600, 750, 900	1	No	7
		GKM-28-***-T40W				
		GKMN-28-***-T40	600, 750, 900	2	Yes	7
		GKMN-28-***-T40W				
	60 W	GKM-28-***-T60	600, 750, 900	1	No	7
		GKM-28-***-T60W				
		GKMN-28-***-T60	600, 750, 900	2	Yes	7
		GKMN-28-***-T60W				
	90 W	GKM-28-***-T90	300, 375, 450	1	No	7
		GKM-28-***-T90W		2		
		GKMN-28-***-T90	300, 375, 450	2	Yes	7
		GKMN-28-***-T90W				
1-Phase	25 W	GKM-28-***-S25	1200, 1500, 1800	1	No	7
		GKM-28-***-S25W				
		GKMN-28-***-S25	1200, 1500, 1800	2	Yes	7
		GKMN-28-***-S25W				
	40 W	GKM-28-***-S40	600, 750, 900	1	No	7
		GKM-28-***-S40W				
		GKMN-28-***-S40	600, 750, 900	2	Yes	7
		GKMN-28-***-S40W				
	60 W	GKM-28-***-S60	600, 750, 900	2	No	7
		GKM-28-***-S60W				
		GKMN-28-***-S60	600, 750, 900	2	Yes	7
		GKMN-28-***-S60W				
	90 W	GKM-28-***-S90	300, 375, 450	2	No	7
		GKM-28-***-S90W				
		GKMN-28-***-S90	300, 375, 450	2	Yes	7
		GKMN-28-***-S90W				

Note: A reduction ratio will be indicated as *** in the nomenclature.
Note: Please refer to page 73 for the performance table.

G3 Type Parallel Shaft | Shaft Diameter **28** | **Small Flange** Mounting

The values in parentheses ( ) are the indications for gearmotors with brake.

<Figure 1>

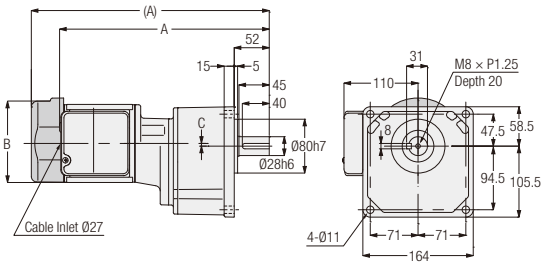

<Figure 2>

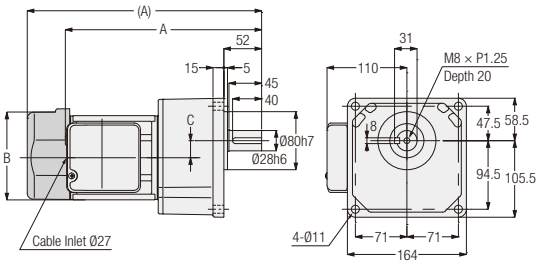

<Figure 3>

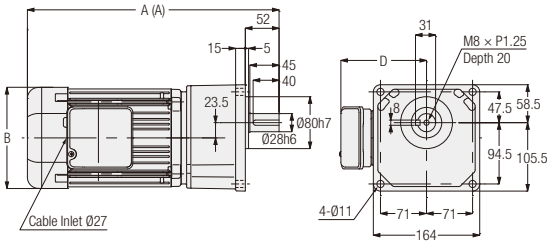

<Figure 4>

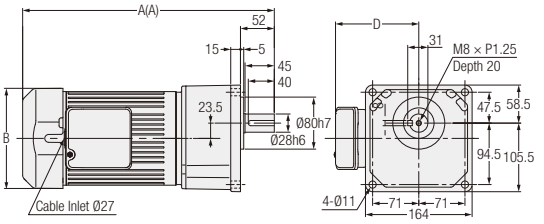

Number of Phases	Power	Part Number	Reduction Ratio	Figure Number	Brake	Approx. Weight (kg)	A	B	C	D
3-Phase	0.1 kW	G3K28N✱✱✱-MM01T◇◇TN	300, 375, 450	1	No	10.5	313.5	Ø115	4	-
		G3K28N✱✱✱-MM01T◇◇TB◆			Yes	12	353.5	□126	4	-
	0.2 kW	G3K28N✱✱✱-MM02T◇◇TN	100, 120, 160, 200	2	No	10	272.5	Ø115	23.5	-
		G3K28N✱✱✱-MM02T◇◇TB◆			Yes	11.5	323	□126	23.5	-
	0.4 kW	G3K28N✱✱✱-MM04T◇◇TN	30, 40, 50, 60, 80, 100	3	No	12	325.5	□137	-	117
		G3K28N✱✱✱-MM04T◇◇TB◆			Yes	13.5	345.5	□137	-	117
	0.75 kW	G3K28N✱✱✱-MR08T◇◇TN	5, 10, 15, 20, 25	4	No	19	368	□154	-	128
		G3K28N✱✱✱-MR08T◇◇TB◆			Yes	22.5	387	□154	-	128

Note: A reduction ratio will be indicated as ✱✱✱ in the nomenclature. In addition, a supply voltage/certification code will be indicated as ◇◇, and a brake specification will be indicated as ◆.

Note: Please refer to page 76 for the performance table.

G3 Type Parallel Shaft | Shaft Diameter **28** | **Small Flange** Mounting

The values in parentheses ( ) are the indications for gearmotors with brake.

<Figure 1>

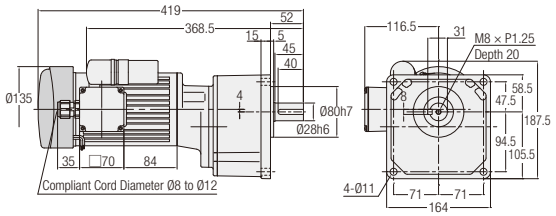

<Figure 2>

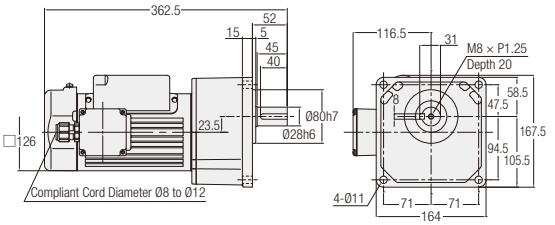

<Figure 3>

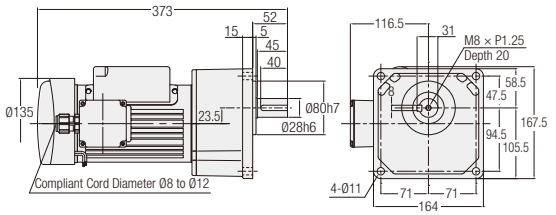

<Figure 4>

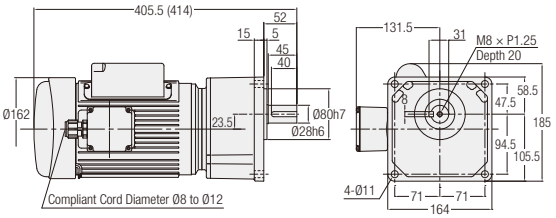

Number of Phases	Power	Part Number	Reduction Ratio	Figure Number	Brake	Approx. Weight (kg)
1-Phase	0.1 kW	G3K28N✱✱✱-MM01C◇JAN	300, 375, 450	1	No	12
		G3K28N✱✱✱-MM01C◇JAB2			Yes	13.5
	0.2 kW	G3K28N✱✱✱-MM02C◇JAN	100, 120, 160, 200	2	No	12
		G3K28N✱✱✱-MM02C◇JAB2		3	Yes	13.5
	0.4 kW	G3K28N✱✱✱-MM04C◇JAN	30, 40, 50, 60, 80, 100	4	No	17.5
		G3K28N✱✱✱-MM04C◇JAB2			Yes	20

Note: A reduction ratio will be indicated as ✱✱✱ in the nomenclature. In addition, a supply voltage code will be indicated as ◇.
Note: Please refer to page 80 for the performance table.

G Type Parallel Shaft | Shaft Diameter 32 | Small Flange Mounting

The values in parentheses ( ) are the indications for gearmotors with brake.

<Figure 1>

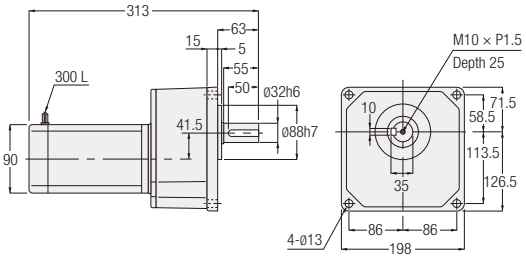

<Figure 2>

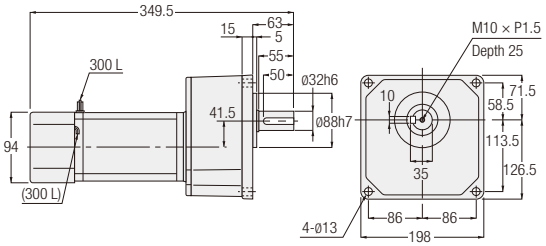

Number of Phases	Power	Part Number	Reduction Ratio	Figure Number	Brake	Approx. Weight (kg)
3-Phase	40 W	GKM-32-***-T40	1200, 1500, 1800	1	No	11
		GKM-32-***-T40W				
		GKMN-32-***-T40	1200, 1500, 1800	2	Yes	11
		GKMN-32-***-T40W				
	60 W	GKM-32-***-T60	1200, 1500, 1800	1	No	11
		GKM-32-***-T60W				
		GKMN-32-***-T60	1200, 1500, 1800	2	Yes	11
		GKMN-32-***-T60W				
	90 W	GKM-32-***-T90	600, 750, 900	1	No	11
		GKM-32-***-T90W		2		
		GKMN-32-***-T90	600, 750, 900	2	Yes	11
		GKMN-32-***-T90W				
1-Phase	40 W	GKM-32-***-S40	1200, 1500, 1800	1	No	11
		GKM-32-***-S40W				
		GKMN-32-***-S40	1200, 1500, 1800	2	Yes	11
		GKMN-32-***-S40W				
	60 W	GKM-32-***-S60	1200, 1500, 1800	2	No	11
		GKM-32-***-S60W				
		GKMN-32-***-S60	1200, 1500, 1800	2	Yes	11
		GKMN-32-***-S60W				
	90 W	GKM-32-***-S90	600, 750, 900	2	No	11
		GKM-32-***-S90W				
		GKMN-32-***-S90	600, 750, 900	2	Yes	11
		GKMN-32-***-S90W				

Note: A reduction ratio will be indicated as *** in the nomenclature.
Note: Please refer to page 74 for the performance table.

G3 Type Parallel Shaft | Shaft Diameter **32** | **Small Flange** Mounting

The values in parentheses ( ) are the indications for gearmotors with brake.

<Figure 1>

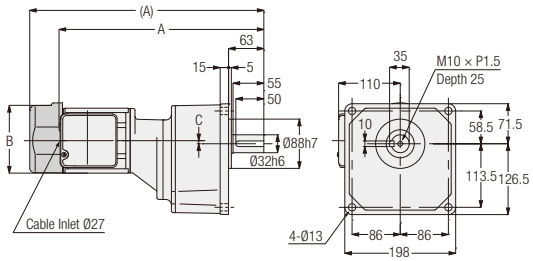

<Figure 2>

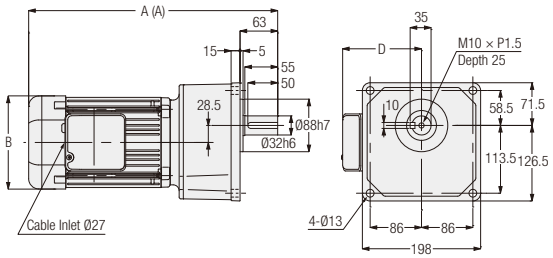

<Figure 3>

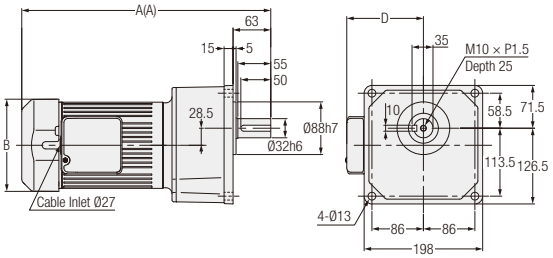

Number of Phases	Power	Part Number	Reduction Ratio	Figure Number	Brake	Approx. Weight (kg)	A	B	C	D
3-Phase	0.1 kW	G3K32N✱✱✱-MM01T◇◇TN	600, 750, 900, 1200	1	No	13.5	332.5	Ø115	-1	-
		G3K32N✱✱✱-MM01T◇◇TB◆			Yes	15	372.5	□126	-1	-
	0.2 kW	G3K32N✱✱✱-MM02T◇◇TN	300, 375, 450	1	No	14	367.5	Ø115	5.5	-
		G3K32N✱✱✱-MM02T◇◇TB◆			Yes	15.5	418	□126	5.5	-
	0.4 kW	G3K32N✱✱✱-MM04T◇◇TN	100, 120, 160, 200	2	No	15	344.5	□137	-	117
		G3K32N✱✱✱-MM04T◇◇TB◆			Yes	16.5	364.5	□137	-	117
	0.75 kW	G3K32N✱✱✱-MR08T◇◇TN	30, 40, 50, 60, 80, 100	3	No	22.5	397	□154	-	128
		G3K32N✱✱✱-MR08T◇◇TB◆			Yes	25	416	□154	-	128
	1.5 kW	G3K32N✱✱✱-MR15T◇◇TN	5, 10, 15, 20, 25	3	No	28.5	433	□178	-	139
		G3K32N✱✱✱-MR15T◇◇TB◆			Yes	32	462	□178	-	139

Note: A reduction ratio will be indicated as ✱✱✱ in the nomenclature. In addition, a supply voltage/certification code will be indicated as ◇◇, and a brake specification will be indicated as ◆.

Note: Please refer to page 76 for the performance table.

G3 Type Parallel Shaft | Shaft Diameter 32 | Small Flange Mounting

The values in parentheses ( ) are the indications for gearmotors with brake.

<Figure 1>

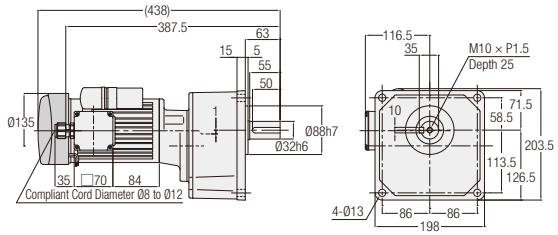

<Figure 2>

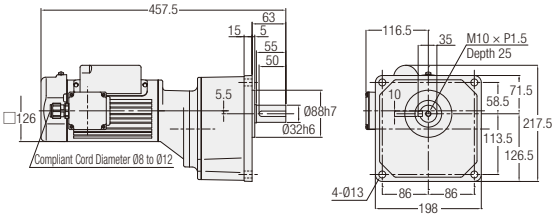

<Figure 3>

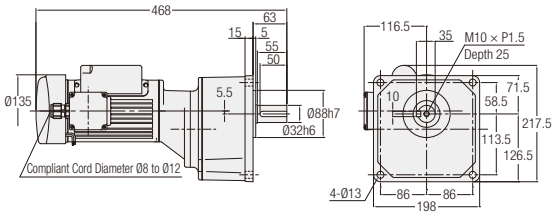

<Figure 4>

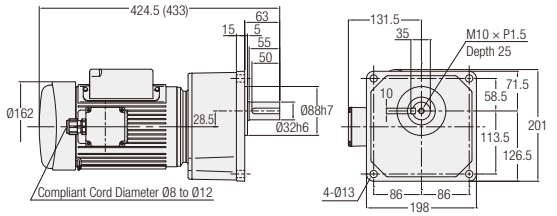

Number of Phases	Power	Part Number	Reduction Ratio	Figure Number	Brake	Approx. Weight (kg)
1-Phase	0.1 kW	G3K32N✱✱✱-MM01C◇JAN	600, 750, 900, 1200	1	No	15
		G3K32N✱✱✱-MM01C◇JAB2			Yes	16.5
	0.2 kW	G3K32N✱✱✱-MM02C◇JAN	300, 375, 450	2	No	16
		G3K32N✱✱✱-MM02C◇JAB2		3	Yes	17.5
	0.4 kW	G3K32N✱✱✱-MM04C◇JAN	100, 120, 160, 200	4	No	20.5
		G3K32N✱✱✱-MM04C◇JAB2			Yes	23

Note: A reduction ratio will be indicated as ✱✱✱ in the nomenclature. In addition, a supply voltage code will be indicated as ◇.
Note: Please refer to page 80 for the performance table.

2. IP65 Gearmotors
IP65 Gearmotors with Brake

2-1. Motor Characteristics Table

G Type 3-Phase Standard Voltage

Series	Power (W)	Voltage (V)	Frequency (Hz)	Frame Size	Rated Current (A)	Rated Speed (r/min)	Startup Current (A)
MINI	15	200/200/220	50/60/60	12	0.14/0.13/0.13	1350/1550/1600	0.30/0.28/0.31
	25	200/200/220	50/60/60	12	0.21/0.19/0.19	1350/1550/1600	0.44/0.42/0.46
				15	0.18/0.17/0.17	1350/1550/1600	0.43/0.41/0.46
	40	200/200/220	50/60/60	12	0.29/0.27/0.27	1350/1550/1600	0.67/0.62/0.68
				15	0.27/0.26/0.26	1350/1550/1550	0.73/0.69/0.76
				18	0.21/0.21/0.21	1350/1550/1600	0.66/0.64/0.70
	60	200/200/220	50/60/60	15	0.40/0.36/0.36	1350/1550/1600	1.04/0.97/1.07
				18	0.33/0.33/0.33	1350/1550/1600	1.06/1.01/1.11
	90	200/200/220	50/60/60	18	0.47/0.47/0.47	1350/1550/1600	1.59/1.51/1.66

G Type 1-Phase Standard Voltage

Series	Power (W)	Voltage (V)	Frequency (Hz)	Frame Size	Rated Current (A)	Rated Speed (r/min)	Startup Current (A)	Capacitor (μF)
MINI	15	100/100	50/60	12	0.39/0.35	1350/1650	0.72/0.67	5
	25	100/100	50/60	12	0.48/0.48	1350/1600	0.86/0.80	7
				15	0.44/0.45	1350/1650	1.00/0.92	7
	40	100/100	50/60	15	0.61/0.66	1350/1650	1.43/1.36	10
				18	0.63/0.64	1400/1650	2.16/2.00	10
	60	100/100	50/60	18	0.90/1.00	1400/1650	2.55/2.37	15

The rated current in the motor characteristics table is the current data for the motor operating without a gearbox.
With regard to gearmotors with a brake, it is necessary to consider the current value flowing through the brake as needed.
For more details, please contact your nearest Sales Office or the CS Center.

G Type 3-Phase Standard Voltage/High Voltage (400 V Class)/Special Voltage

Series	Power	Power Supply/ Certification Codes	Voltage (V)	Frequency (Hz)	Rated Current (A)	Startup Current (A)	Rated Speed (r/min)
MID	0.1kW	NN	200/200/220	50/60/60	0.61/0.54/0.54	2.39/2.27/2.52	1410/1690/1710
		WN	380/400/400/440	50/50/60/60	0.31/0.31/0.28/0.28	1.12/1.18/1.12/1.22	1400/1410/1690/1720
		KN	220/380	60/60	0.52/0.30	1.90/1.10	1680/1680
		CN	220/230/380	50/50/50	0.55/0.54/0.31	1.94/2.03/1.12	1400/1410/1400
		DN	220/220/380/380	50/60/50/60	0.55/0.52/0.31/0.30	1.94/1.90/1.12/1.10	1400/1680/1400/1680
		EN	415/440/480	50/50/60	0.30/0.29/0.26	1.06/1.12/1.17	1390/1420/1720
		AN	208/230/460/400	60/60/60/50	0.54/0.57/0.29/0.31	2.35/2.62/1.26/1.21	1690/1730/1730/1410
		MA	575	60	0.20	0.87	1700
	0.2kW IE2	NN	200/200/220	50/60/60	1.1/1.0/1.0	4.70/4.35/4.85	1400/1680/1700
		WN	380/400/400/440	50/50/60/60	0.56/0.56/0.50/0.50	2.29/2.38/2.29/2.48	1390/1400/1680/1710
		KN	220/380	60/60	0.93/0.52	3.70/2.20	1680/1680
		CN	220/230/380	50/50/50	0.99/0.98/0.56	3.97/4.15/2.29	1400/1410/1390
		DN	220/220/380/380	50/60/50/60	0.99/0.93/0.56/0.52	3.97/3.70/2.29/2.20	1400/1680/1390/1680
		EN	415/440/480	50/50/60	0.50/0.50/0.45	1.75/1.86/2.00	1370/1400/1700
		AN	208/230/460/400	60/60/60/50	1.0/1.0/0.50/0.56	4.78/5.16/2.56/2.44	1680/1720/1720/1400
		MA	575	60	0.40	1.78	1710
	0.4kW IE2	NN	200/200/220	50/60/60	2.1/1.8/1.8	9.60/8.54/9.21	1400/1680/1700
		WN	380/400/400/440	50/50/60/60	1.0/1.0/0.9/0.9	4.43/4.64/4.24/4.85	1390/1400/1680/1710
		KN	220/380	60/60	1.7/1.0	7.10/4.09	1670/1670
		CN	220/230/380	50/50/50	1.8/1.8/1.0	7.63/8.04/4.43	1390/1400/1390
		DN	220/220/380/380	50/60/50/60	1.8/1.7/1.0/1.0	7.63/7.10/4.43/4.09	1390/1670/1390/1670
		EN	415/440/480	50/50/60	0.96/0.95/0.82	4.45/4.56/4.52	1390/1410/1680
		AN	208/230/460/400	60/60/60/50	1.8/1.8/0.9/1.0	9.21/9.82/5.06/4.62	1680/1720/1720/1400
		MA	575	60	0.68	3.94	1700
	0.75 kW IE3	NN	200/200/220	50/60/60	3.5/3.2/3.1	21.8/19.0/21.1	1450/1740/1750
		WN	380/400/400/440	50/50/60/60	1.73/1.72/1.58/1.54	10.2/10.8/9.8/10.7	1440/1450/1740/1750
		KN	220/380	60/60	2.9/1.7	16.9/9.8	1740/1740
		CN	220/230/380	50/50/50	3.0/3.0/1.7	17.8/18.7/10.3	1450/1450/1440
		DN	220/220/380/380	50/60/50/60	3.1/2.9/1.8/1.7	19.3/16.9/11.2/9.8	1450/1740/1450/1740
		EN	415/440/480	50/50/60	1.54/1.52/1.36	8.6/9.3/9.0	1440/1450/1750
		UN	230/460/400	60/60/50	3.1/1.5/1.7	22.3/11.2/10.8	1760/1760/1450
		MA	575	60	1.16	7.2	1750
	1.5kW IE3	NN	200/200/220	50/60/60	6.7/6.1/5.9	45.6/40.3/45.1	1450/1740/1760
		WN	380/400/400/440	50/50/60/60	3.4/3.4/3.1/3.0	21.9/23.2/20.4/22.8	1450/1450/1750/1760
		KN	220/380	60/60	5.9/3.4	45.1/25.8	1760/1760
		CN	220/230/380	50/50/50	5.9/5.9/3.4	38.5/40.4/22.1	1450/1450/1450
		EN	415/440/480	50/50/60	3.1/3.1/2.8	20.8/22.2/21.2	1450/1460/1760
		UN	230/460/400	60/60/50	5.9/2.9/3.3	44.9/22.6/23.2	1760/1760/1450
		MA	575	60	2.2	17.0	1760
	2.2kW IE3	NN	200/200/220	50/60/60	9.3/8.6/8.2	70.3/56.9/63.7	1470/1760/1770
		WN	380/400/400/440	50/50/60/60	4.5/4.4/4.2/3.9	30.0/32.0/25.0/28.0	1440/1450/1740/1750
		KN	220/380	60/60	8.3/4.8	65.0/38.0	1770/1770
		CN	220/230/380	50/50/50	7.9/7.7/4.5	52.0/54.3/30.0	1460/1470/1440
		EN	415/440/480	50/50/60	4.3/4.3/3.8	33.1/35.5/29.8	1460/1470/1770
		UN	230/460/400	60/60/50	7.9/4.0/4.5	65.2/34.8/36.3	1770/1770/1470
		MA	575	60	3.3	24.4	1760

The rated current in the motor characteristics table is the current data for the motor operating without a gearbox.
With regard to gearmotors with a brake, it is necessary to consider the current value flowing through the brake as needed.
For more details, please contact your nearest Sales Office or the CS Center.

GA Type 3-Phase Standard Voltage/High Voltage (400 V Class)/Special Voltage

Series	Power	Power Supply/ Certification Codes	Voltage (V)	Frequency (Hz)	Rated Current (A)	Startup Current (A)	Rated Speed (r/min)
MID	0.4kW IE2	NN	200/200/220	50/60/60	2.1/1.8/1.8	9.60/8.54/9.21	1400/1680/1700
		WN	380/400/400/440	50/50/60/60	1.0/1.0/0.9/0.9	4.43/4.64/4.24/4.85	1390/1400/1680/1710
		KN	220/380	60/60	1.7/1.0	7.10/4.09	1670/1670
		CN	220/230/380	50/50/50	1.8/1.8/1.0	7.63/8.04/4.43	1390/1400/1390
		DN	220/220/380/380	50/60/50/60	1.8/1.7/1.0/1.0	7.63/7.10/4.43/4.09	1390/1670/1390/1670
		EN	415/440/480	50/50/60	0.96/0.95/0.82	4.45/4.56/4.52	1390/1410/1680
		AN	208/230/460/400	60/60/60/50	1.8/1.8/0.9/1.0	9.21/9.82/5.06/4.62	1680/1720/1720/1400
		MA	575	60	0.68	3.94	1700
	0.75 kW IE3	NN	200/200/220	50/60/60	3.5/3.2/3.1	21.8/19.0/21.1	1450/1740/1750
		WN	380/400/400/440	50/50/60/60	1.73/1.72/1.58/1.54	10.2/10.8/9.8/10.7	1440/1450/1740/1750
		KN	220/380	60/60	2.9/1.7	16.9/9.8	1740/1740
		CN	220/230/380	50/50/50	3.0/3.0/1.7	17.8/18.7/10.3	1450/1450/1440
		DN	220/220/380/380	50/60/50/60	3.1/2.9/1.8/1.7	19.3/16.9/11.2/9.8	1450/1740/1450/1740
		EN	415/440/480	50/50/60	1.54/1.52/1.36	8.6/9.3/9.0	1440/1450/1750
		UN	230/460/400	60/60/50	3.1/1.5/1.7	22.3/11.2/10.8	1760/1760/1450
		MA	575	60	1.16	7.2	1750
	1.5kW IE3	NN	200/200/220	50/60/60	6.7/6.1/5.9	45.6/40.3/45.1	1450/1740/1760
		WN	380/400/400/440	50/50/60/60	3.4/3.4/3.1/3.0	21.9/23.2/20.4/22.8	1450/1450/1750/1760
		KN	220/380	60/60	5.9/3.4	45.1/25.8	1760/1760
		CN	220/230/380	50/50/50	5.9/5.9/3.4	38.5/40.4/22.1	1450/1450/1450
		EN	415/440/480	50/50/60	3.1/3.1/2.8	20.8/22.2/21.2	1450/1460/1760
		UN	230/460/400	60/60/50	5.9/2.9/3.3	44.9/22.6/23.2	1760/1760/1450
		MA	575	60	2.2	17.0	1760
	2.2kW IE3	NN	200/200/220	50/60/60	9.3/8.6/8.2	70.3/56.9/63.7	1470/1760/1770
		WN	380/400/400/440	50/50/60/60	4.5/4.4/4.2/3.9	30.0/32.0/25.0/28.0	1440/1450/1740/1750
		KN	220/380	60/60	8.3/4.8	65.0/38.0	1770/1770
		CN	220/230/380	50/50/50	7.9/7.7/4.5	52.0/54.3/30.0	1460/1470/1440
		EN	415/440/480	50/50/60	4.3/4.3/3.8	33.1/35.5/29.8	1460/1470/1770
		UN	230/460/400	60/60/50	7.9/4.0/4.5	65.2/34.8/36.3	1770/1770/1470
		MA	575	60	3.3	24.4	1760

The rated current in the motor characteristics table is the current data for the motor operating without a gearbox.
With regard to gearmotors with a brake, it is necessary to consider the current value flowing through the brake as needed.
For more details, please contact your nearest Sales Office or the CS Center.

2-2. Performance Table

G Type IP65 Gearmotors/IP65 Gearmotors with Brake

[Notes]
- The values in parentheses ( ) in the drawings are the indications for gearmotors with brake.
- The values in brackets [ ] in the drawings are the indications for carbon steel output shafts.
- The output shaft speed is the value relative to the synchronous speed of the motor and the reduction ratio.
- Allowable output shaft O.H.L. is the value at the middle of the output shaft.
- The "*" mark indicates a limited torque type. Please make sure to check the allowable output shaft torque in the performance table.
- In the performance table, the reduction ratio in ▭ indicates that when the connection is made as shown on page 564 (CW), the direction of rotation is clockwise in the case of a three-phase motor or counterclockwise in the case of a single-phase motor when viewed from the output shaft side. (Refer to the figure on the right)

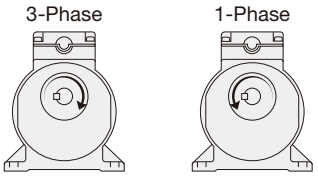

Series	Motor Power	Frame Size	Reduction Ratio	Actual Reduction Ratio	Output Shaft Speed r/min 50 Hz	Output Shaft Speed r/min 60 Hz	Allowable Output Shaft Torque N·m	Allowable Output Shaft O.H.L. N	Drawings Foot Mount	Drawings Flange Mount
MINI	15 W	12	1/5	1/5	300	360	0.29	98	P.142	P.150
			1/7.5	1/7.5	200	240	0.49	196		
			1/10	1/10	150	180	0.69	245		
			1/15	1/15	100	120	0.98	343		
			1/20	1/20	75	90	1.27	441		
			1/25	1/25	60	72	1.67	490		
			1/30	1/29	50	60	1.96	539		
			1/40	1/40	37.5	45	2.65	588		
			1/50	1/50	30	36	3.33	637		
			1/60	1/58	25	30	3.92	686		
			1/80	1/80	18.8	22.5	5.00	735		
			1/100	1/100	15	18	6.27	735		
			1/120	1/120	12.5	15	7.45	784		
			1/160	1/160	9.4	11.2	9.80	784		
			1/200	1/200	7.5	9	12.7	784		
			1/240	1/232	6.3	7.5	14.7	784		
	25 W	12	1/5	1/5	300	360	0.59	98	P.142	P.150
			1/7.5	1/7.5	200	240	0.78	196		
			1/10	1/10	150	180	1.08	245		
			1/15	1/15	100	120	1.67	343		
			1/20	1/20	75	90	2.25	441		
			1/25	1/25	60	72	2.74	490		
			1/30	1/29	50	60	3.33	539		
			1/40	1/40	37.5	45	4.41	588		
			1/50	1/50	30	36	5.49	637		
			1/60	1/58	25	30	6.66	686		
			1/80	1/80	18.8	22.5	8.43	735		
			1/100	1/100	15	18	10.8	735		
			1/120	1/120	12.5	15	12.7	784		
		15	1/160	1/160	9.4	11.2	16.7	1080	P.142	P.150
			1/200	1/200	7.5	9	20.6	1080		
			1/240	1/232	6.3	7.5	25.5	1080		
	40 W	12	1/5	1/5	300	360	0.88	98	P.142	P.150
			1/7.5	1/7.5	200	240	1.37	196		
			1/10	1/10	150	180	1.76	245		
			1/15	1/15	100	120	2.65	343		
			1/20	1/20	75	90	3.53	441		
			1/25	1/25	60	72	4.41	490		
			1/30	1/29	50	60	5.29	539		
			1/40	1/40	37.5	45	7.06	588		
			1/50	1/50	30	36	8.82	637		
			1/60	1/58	25	30	10.8	686		
		15	1/80	1/80	18.8	22.5	13.7	980	P.142	P.150
			1/100	1/100	15	18	16.7	980		
			1/120	1/120	12.5	15	20.6	1080		
		18	1/160	1/160	9.4	11.2	26.5	1370	P.143	P.151
			1/200	1/200	7.5	9	33.3	1370		
			1/240	1/240	6.3	7.5	40.2	1370		

Series	Motor Power	Frame Size	Reduction Ratio	Actual Reduction Ratio	Output Shaft Speed r/min		Allowable Output Shaft Torque	Allowable Output Shaft O.H.L.	Drawings	
					50 Hz	60 Hz	N·m	N	Foot Mount	Flange Mount
MINI	60 W	15	1/5	1/5	300	360	1.37	98	P.142	P.150
			1/7.5	1/7.5	200	240	2.06	196		
			1/10	1/10	150	180	2.74	245		
			1/15	1/15	100	120	4.12	343		
			1/20	1/20	75	90	5.49	441		
			1/25	1/25	60	72	6.96	490		
			1/30	1/29	50	60	8.33	539		
			1/40	1/40	37.5	45	10.8	784		
			1/50	1/50	30	36	13.7	882		
			1/60	1/58	25	30	16.7	882		
		18	1/80	1/80	18.8	22.5	20.6	1270	P.143	P.151
			1/100	1/100	15	18	26.5	1270		
			1/120	1/120	12.5	15	31.4	1370		
			1/160	1/160	9.4	11.2	42.1	1370		
			1/200	1/200	7.5	9	52.9	1370		
			* 1/240	1/240	6.3	7.5	53.9	1370		
	90 W	18	1/5	1/5	300	360	2.06	147	P.143	P.151
			1/7.5	1/7.5	200	240	3.14	245		
			1/10	1/10	150	180	4.12	343		
			1/15	1/15	100	120	6.17	441		
			1/20	1/20	75	90	8.33	539		
			1/25	1/25	60	72	10.8	588		
			1/30	1/29	50	60	12.7	686		
			1/40	1/40	37.5	45	16.7	1080		
			1/50	1/50	30	36	20.6	1180		
			1/60	1/60	25	30	24.5	1180		
			1/80	1/80	18.8	22.5	31.4	1270		
			1/100	1/100	15	18	39.2	1270		
			1/120	1/120	12.5	15	47.0	1370		
			* 1/160	1/160	9.4	11.2	53.9	1370		
			* 1/200	1/200	7.5	9	53.9	1370		
			* 1/240	1/240	6.3	7.5	53.9	1370		

G3 Type IP65 Gearmotors/IP65 Gearmotors with Brake

[Notes]
- The values in parentheses ( ) in the drawings are the indications for gearmotors with brake.
- The values in brackets [ ] in the drawings are the indications for carbon steel output shafts.
- The output shaft speed is the value relative to the synchronous speed of the motor and the reduction ratio.
- ▭ in the performance table indicates that the shaft rotates clockwise when viewed from the output shaft side when the connection is made as shown on page 566 (CW). (Refer to the figure on the right)
- Allowable output shaft O.H.L. is the value at the middle of the output shaft.
- The "*" mark indicates a limited torque type. Please make sure to check the allowable output shaft torque in the performance table.

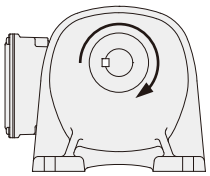

Series	Motor Power	Frame Size	Reduction Ratio	Actual Reduction Ratio	Output Shaft Speed r/min		Allowable Output Shaft Torque N·m		Allowable Output Shaft O.H.L. N	Drawings Foot Mount	Drawings Flange Mount	Drawings Small Flange Mount
					50 Hz	60 Hz	50 Hz	60 Hz				
MID	3-Phase 0.1 kW	18	1/5	33/164	300	360	3	2.5	770	P.143	P.151	P.157
			1/10	77/779	150	180	6.1	5	1140			
			1/15	119/1804	100	120	9.1	7.5	1270			
			1/20	49/984	75	90	12	9.8	1530			
			1/25	28/697	60	72	15	12.7	1650			
			1/30	35/1066	50	60	19	14.7	1780			
			1/40	35/1404	37.5	45	24	19.6	1910			
			1/50	7/351	30	36	29	24.5	2040			
		22	1/60	11/684	25	30	35	29.4	2800	P.144	P.152	P.158
			1/80	21/1634	18.8	22.5	47	39.2	3180			
			1/100	7/684	15	18	59	49	3180			
			1/120	147/17974	12.5	15	71	58.8	3180			
			1/160	21/3268	9.4	11.2	94	78.4	3180			
			1/200	21/4085	7.5	9	117	98	3180			
		28	1/300	221/65190	5	6	157	130	3430	P.145	P.153	P.159
			1/375	187/68370	4	4.8	196	163	3430			
			1/450	1183/521520	3.3	4	235	196	3430			
		32	1/600	147/88192	2.5	3	313	261	5880	P.146	P.154	P.160
			1/750	49/36464	2	2.4	391	326	5880			
			* 1/900	62/57063	1.7	2	431	391	5880			
			* 1/1200	46/55195	1.3	1.5	431	431	5880			
	3-Phase 0.2 kW	18	1/5	33/164	300	360	6.1	5	770	P.143	P.151	P.157
			1/10	77/779	150	180	11.8	9.8	1140			
			1/15	119/1804	100	120	18.6	14.7	1270			
			1/20	49/984	75	90	24.5	20.6	1450			
			1/25	28/697	60	72	30.4	25.5	1550			
		22	1/30	7/216	50	60	36.3	30.4	2280	P.144	P.152	P.158
			1/40	91/3600	37.5	45	47	39.2	2410			
			1/50	11/540	30	36	58.8	49	2540			
			1/60	637/39600	25	30	70.6	58.8	2800			
			1/80	91/7200	18.8	22.5	94.1	78.4	3000			
			* 1/100	11/1080	15	18	97	80.4	3180			
		28	1/100	13/1353	15	18	117	98	3690	P.145	P.153	P.159
			1/120	91/11000	12.5	15	140	117	4320			
			1/160	1/165	9.4	11.2	187	156	4450			
			1/200	7/1375	7.5	9	234	195	4450			
		32	1/300	91/27348	5	6	313	261	5880	P.146	P.154	P.160
			1/375	77/28620	4	4.8	391	326	5880			
			1/450	91/41022	3.3	4	431	391	5880			
		40	1/600	9/5300	2.5	3	626	521	7060	P.147	P.155	-
			* 1/750	62/46427	2	2.4	764	653	7060			
			* 1/900	23/21259	1.7	2	764	764	7060			
			* 1/1200	9/10600	1.3	1.5	764	764	7060			

Series	Motor Power	Frame Size	Reduction Ratio	Actual Reduction Ratio	Output Shaft Speed r/min		Allowable Output Shaft Torque N·m		Allowable Output Shaft O.H.L.	Drawings		
					50 Hz	60 Hz	50 Hz	60 Hz	N	Foot Mount	Flange Mount	Small Flange Mount
MID	3-Phase 0.4 kW	22	1/5	7/34	300	360	12	10	1140	P.144	P.152	P.158
			1/10	7/68	150	180	25	21	1530			
			1/15	49/748	100	120	36	30	1780			
			1/20	7/136	75	90	48	40	1910			
			1/25	7/170	60	72	61	50	2050			
		28	1/30	1/30	50	60	73	61	3310	P.145	P.153	P.159
			1/40	221/8610	37.5	45	94	78	3690			
			1/50	187/9030	30	36	117	98	4080			
			1/60	169/9840	25	30	140	117	4450			
			1/80	65/5166	18.8	22.5	187	156	4450			
			* 1/100	55/5418	15	18	193	161	4450			
		32	1/100	7/688	15	18	234	195	6370	P.146	P.154	P.160
			1/120	77/9360	12.5	15	281	234	7640			
			1/160	21/3328	9.4	11.2	374	313	7640			
			1/200	189/38272	7.5	9	431	390	7640			
		40	1/300	7/2160	5	6	626	521	7060	P.147	P.155	-
			* 1/375	77/29328	4	4.8	764	653	7060			
			* 1/450	49/21600	3.3	4	764	764	7060			
		50	* 1/600	57/35360	2.5	3	1225	1044	9800	P.148	P.156	-
			* 1/750	25/19448	2	2.4	1225	1225	9800			
			* 1/900	5/4338	1.7	2	1225	1225	9800			
			* 1/1200	33/40664	1.3	1.5	1225	1225	9800			
	3-Phase 0.75 kW	28	1/5	91/459	300	360	23	19	1650	P.145	P.153	P.159
			1/10	1/10	150	180	45	38	2280			
			1/15	91/1360	100	120	68	57	2800			
			1/20	5/102	75	90	91	75	3050			
			1/25	7/170	60	72	114	94	3180			
		32	1/30	3/92	50	60	136	114	5220	P.146	P.154	P.160
			1/40	13/516	37.5	45	175	146	5470			
			1/50	11/540	30	36	220	183	5780			
			1/60	13/774	25	30	264	220	6080			
			1/80	13/1032	18.8	22.5	351	293	6180			
			* 1/100	11/1080	15	18	362	302	6770			
		40	1/100	91/9000	15	18	439	366	9170	P.147	P.155	-
			1/120	77/9400	12.5	15	527	439	9170			
			1/160	9/1400	9.4	11.2	703	585	9170			
			1/200	9/1750	7.5	9	764	732	9170			
		50	1/300	211/62013	5	6	1176	978	9800	P.148	P.156	-
			* 1/375	94/36103	4	4.8	1225	1225	9800			
			* 1/450	65/29167	3.3	4	1225	1225	9800			

Series	Motor Power	Frame Size	Reduction Ratio	Actual Reduction Ratio	Output Shaft Speed		Allowable Output Shaft Torque		Allowable Output Shaft O.H.L.	Drawings		
					r/min		N·m			Foot Mount	Flange Mount	Small Flange Mount
					50 Hz	60 Hz	50 Hz	60 Hz	N			
MID	3-Phase 1.5 kW	32	1/5	1/5	300	360	45	38	2280	P.146	P.154	P.160
			1/10	1/10	150	180	91	75	3180			
			1/15	1/15	100	120	136	114	3690			
			1/20	1/20	75	90	181	151	4190			
			1/25	9/230	60	72	226	189	4410			
		40	1/30	1/30	50	60	272	226	6600	P.147	P.155	-
			1/40	13/540	37.5	45	351	293	6960			
			1/50	11/564	30	36	439	366	6960			
			1/60	91/5400	25	30	527	439	7210			
			1/80	13/1080	18.8	22.5	703	585	7400			
			* 1/100	11/1128	15	18	724	603	7400			
		50	1/100	25/2618	15	18	878	732	12500	P.148	P.156	-
			1/120	77/8993	12.5	15	1060	878	12500			
			* 1/160	33/5474	9.4	11.2	1230	1170	12500			
			* 1/200	30/5831	7.5	9	1230	1230	12500			
	3-Phase 2.2 kW	40	1/5	7/36	300	360	67	56	2800	P.147	P.155	-
			1/10	7/72	150	180	133	111	4080			
			1/15	49/720	100	120	200	167	4580			
			1/20	7/144	75	90	266	221	5220			
			1/25	7/180	60	72	332	277	6110			
		50	1/30	5/154	50	60	399	332	9040	P.148	P.156	-
			1/40	399/15488	37.5	45	515	429	9420			
			1/50	399/20240	30	36	644	537	10000			
			1/60	49/2904	25	30	773	644	10000			
			1/80	49/3795	18.8	22.5	1029	858	10100			
			* 1/100	21/2116	15	18	1230	1080	10100			

Note 1: Please be sure to read the notes on page 138.

GA Type IP65 Gearmotors/IP65 Gearmotors with Brake

[Notes]
- The values in parentheses ( ) in the drawings are the indications for gearmotors with brake.
- The values in brackets [ ] in the drawings are the indications for carbon steel output shafts.
- The output shaft speed is the value relative to the synchronous speed of the motor and the reduction ratio.
- ▭ in the performance table indicates that the shaft rotates clockwise when viewed from the output shaft side when the connection is made as shown on page 566 (CW). (Refer to the figure on the right)
- Allowable output shaft O.H.L. is the value at the middle of the output shaft.
- The "*" mark indicates a limited torque type. Please make sure to check the allowable output shaft torque in the performance table.

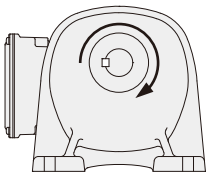

Series	Motor Power	Frame Size	Reduction Ratio	Actual Reduction Ratio	Output Shaft Speed		Allowable Output Shaft Torque		Allowable Output Shaft O.H.L.	Drawings		
					r/min		N·m			Foot Mount	Flange Mount	Small Flange Mount
					50 Hz	60 Hz	50 Hz	60 Hz	N			
MID	3-Phase 0.4 kW	50	* 1/600	57/35360	2.5	3	1225	1044	9800	P.149	-	-
			* 1/750	25/19448	2	2.4	1225	1225	9800			
			* 1/900	5/4338	1.7	2	1225	1225	9800			
			* 1/1200	33/40664	1.3	1.5	1225	1225	9800			
	3-Phase 0.75 kW	50	1/300	211/62013	5	6	1176	978	9800	P.149	-	-
			* 1/375	94/36103	4	4.8	1225	1225	9800			
			* 1/450	65/29167	3.3	4	1225	1225	9800			
	3-Phase 1.5 kW	50	1/100	25/2618	15	18	878	732	12500	P.149	-	-
			1/120	77/8993	12.5	15	1060	878	12500			
			* 1/160	33/5474	9.4	11.2	1230	1170	12500			
			* 1/200	30/5831	7.5	9	1230	1230	12500			
	3-Phase 2.2 kW	50	1/30	5/154	50	60	399	332	9040	P.149	-	-
			1/40	399/15488	37.5	45	515	429	9420			
			1/50	399/20240	30	36	644	537	10000			
			1/60	49/2904	25	30	773	644	10000			
			1/80	49/3795	18.8	22.5	1029	858	10100			
			* 1/100	21/2116	15	18	1230	1080	10100			

2-3. Drawings

G Type Parallel Shaft | Shaft Diameter 12 | Foot Mounting

The values in parentheses ( ) are the indications for gearmotors with brake.

<Figure 1>

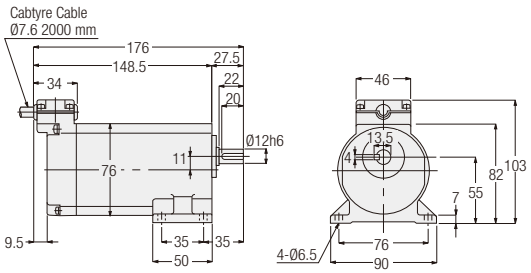

<Figure 2>

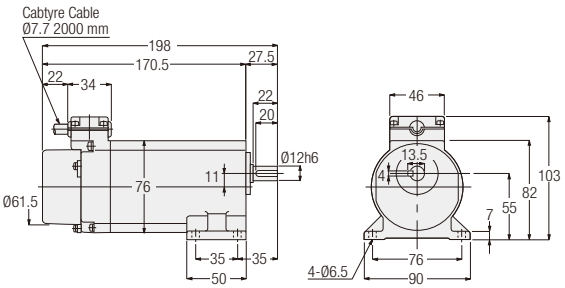

Number of Phases	Power	Part Number	Reduction Ratio	Figure Number	Brake	Approx. Weight (kg)
3-Phase	15 W	GLW-12-***-T15	5, 7.5, 10, 15, 20, 25, 30, 40, 50, 60, 80, 100, 120, 160, 200, 240	1	No	2
		GLV-12-***-T15		2	Yes	
	25 W	GLW-12-***-T25	5, 7.5, 10, 15, 20, 25, 30, 40, 50, 60, 80, 100, 120	1	No	2
		GLV-12-***-T25		2	Yes	
	40 W	GLW-12-***-T40	5, 7.5, 10, 15, 20, 25, 30, 40, 50, 60	1	No	2
		GLV-12-***-T40		2	Yes	
1-Phase	15 W	GLW-12-***-S15	5, 7.5, 10, 15, 20, 25, 30, 40, 50, 60, 80, 100, 120, 160, 200, 240	1	No	2
		GLV-12-***-S15		2	Yes	
	25 W	GLW-12-***-S25	5, 7.5, 10, 15, 20, 25, 30, 40, 50, 60, 80, 100, 120	1	No	2
		GLV-12-***-S25		2	Yes	

Note: A reduction ratio will be indicated as *** in the nomenclature.
Note: Please refer to page 136 for the performance table.

G Type Parallel Shaft | Shaft Diameter 15 | Foot Mounting

<Figure 3>

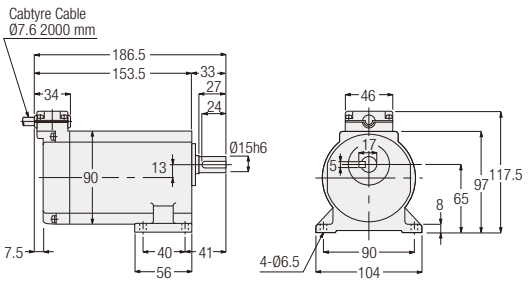

<Figure 4>

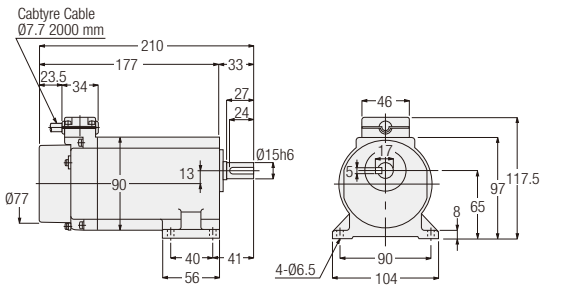

Number of Phases	Power	Part Number	Reduction Ratio	Figure Number	Brake	Approx. Weight (kg)
3-Phase	25 W	GLW-15-***-T25	160, 200, 240	3	No	3
		GLV-15-***-T25		4	Yes	
	40 W	GLW-15-***-T40	80, 100, 120	3	No	3
		GLV-15-***-T40		4	Yes	
	60 W	GLW-15-***-T60	5, 7.5, 10, 15, 20, 25, 30, 40, 50, 60	3	No	3
		GLV-15-***-T60		4	Yes	
1-Phase	25 W	GLW-15-***-S25	160, 200, 240	3	No	3
		GLV-15-***-S25		4	Yes	
	40 W	GLW-15-***-S40	5, 7.5, 10, 15, 20, 25, 30, 40, 50, 60, 80, 100, 120	3	No	3
		GLV-15-***-S40		4	Yes	

Note: A reduction ratio will be indicated as *** in the nomenclature.
Note: Please refer to page 136 for the performance table.

G Type Parallel Shaft | Shaft Diameter 18 | Foot Mounting

The values in parentheses ( ) are the indications for gearmotors with brake.
The values in brackets [ ] are the indications for carbon steel output shafts.

<Figure 1>

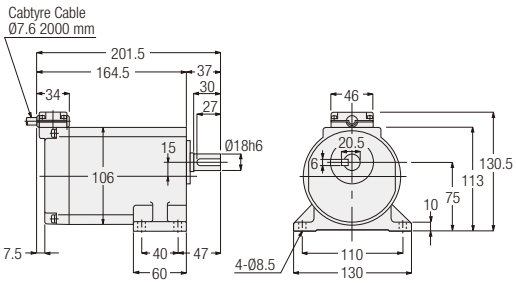

<Figure 2>

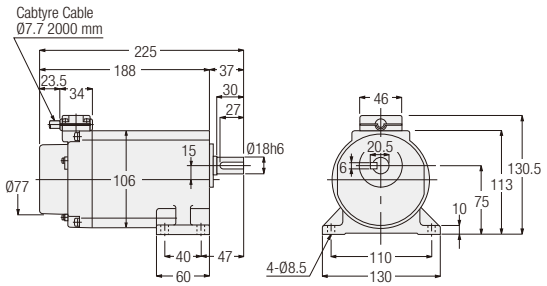

Number of Phases	Power	Part Number	Reduction Ratio	Figure Number	Brake	Approx. Weight (kg)
3-Phase	40 W	GLW-18-✱✱✱-T40	160, 200, 240	1	No	4
		GLV-18-✱✱✱-T40		2	Yes	
	60 W	GLW-18-✱✱✱-T60	80, 100, 120, 160, 200, 240	1	No	4
		GLV-18-✱✱✱-T60		2	Yes	
	90 W	GLW-18-✱✱✱-T90	5, 7.5, 10, 15, 20, 25, 30, 40, 50, 60, 80, 100, 120, 160, 200, 240	1	No	4
		GLV-18-✱✱✱-T90		2	Yes	
1-Phase	40 W	GLW-18-✱✱✱-S40	160, 200, 240	1	No	4
		GLV-18-✱✱✱-S40		2	Yes	
	60 W	GLW-18-✱✱✱-S60	5, 7.5, 10, 15, 20, 25, 30, 40, 50, 60, 80, 100, 120, 160, 200, 240	1	No	4
		GLV-18-✱✱✱-S60		2	Yes	

Note: A reduction ratio will be indicated as ✱✱✱ in the nomenclature.
Note: Please refer to page 136 for the performance table.

G3 Type Parallel Shaft | Shaft Diameter 18 | Foot Mounting

<Figure 3>

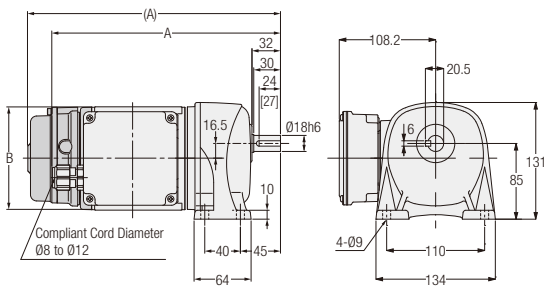

<Figure 4>

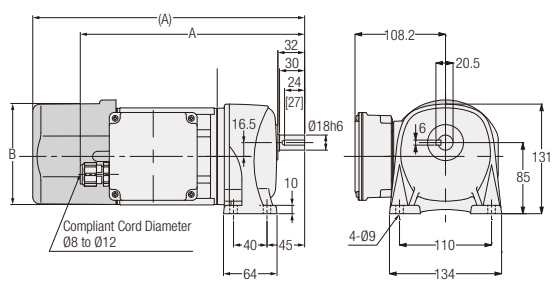

Number of Phases	Power	Output Shaft: Stainless Steel	Output Shaft: Carbon Steel	Reduction Ratio	Figure Number	Brake	Approx. Weight (kg)	A	B
3-Phase	0.1 kW	G3L18S✱✱✱-WM01T◇◇EN	G3L18N✱✱✱-WM01T◇◇EN	5, 10, 15, 20, 25, 30, 40, 50	3	No	6	253.5	Ø115
		G3L18S✱✱✱-WM01T◇◇EV◆	G3L18N✱✱✱-WM01T◇◇EV◆			Yes	7.5	281	Ø115
	0.2 kW	G3L18S✱✱✱-WM02T◇◇EN	G3L18N✱✱✱-WM02T◇◇EN	5, 10, 15, 20, 25	4	No	6.5	268.5	Ø115
		G3L18S✱✱✱-WM02T◇◇EV◆	G3L18N✱✱✱-WM02T◇◇EV◆			Yes	8	325	□126

Note: A reduction ratio will be indicated as ✱✱✱ in the nomenclature. In addition, a supply voltage/certification code will be indicated as ◇◇, and a brake specification will be indicated as ◆.
Note: Please refer to page 138 for the performance table.
Note: For the dimensions of the output shaft key, refer to page 981.
Note: The carbon steel output shaft is provided with a tap as a standard specification. Please refer to page 1017 for information of the size.

G3 Type Parallel Shaft | Shaft Diameter 22 | Foot Mounting

The values in parentheses ( ) are the indications for gearmotors with brake.
The values in brackets [ ] are the indications for carbon steel output shafts.

<Figure 1>

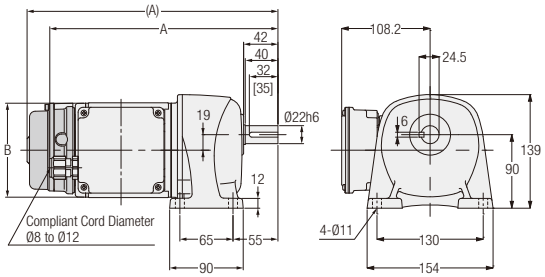

<Figure 2>

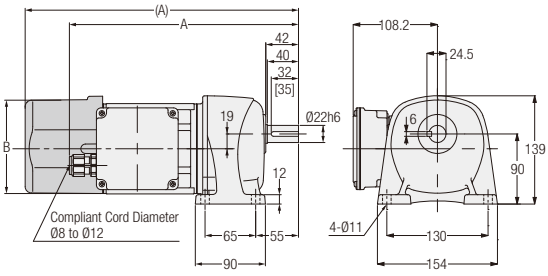

<Figure 3>

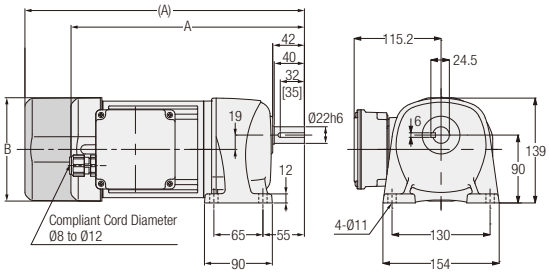

Number of Phases	Power	Output Shaft: Stainless Steel	Output Shaft: Carbon Steel	Reduction Ratio	Figure Number	Brake	Approx. Weight (kg)	A	B
3-Phase	0.1 kW	G3L22S✱✱✱-WM01T◇◇EN	G3L22N✱✱✱-WM01T◇◇EN	60, 80, 100, 120, 160, 200	1	No	7	279.5	Ø115
		G3L22S✱✱✱-WM01T◇◇EV◆	G3L22N✱✱✱-WM01T◇◇EV◆			Yes	8.5	307	Ø115
	0.2 kW	G3L22S✱✱✱-WM02T◇◇EN	G3L22N✱✱✱-WM02T◇◇EN	30, 40, 50, 60, 80, 100	2	No	7.5	294.5	Ø115
		G3L22S✱✱✱-WM02T◇◇EV◆	G3L22N✱✱✱-WM02T◇◇EV◆			Yes	9	351	□126
	0.4 kW	G3L22S✱✱✱-WM04T◇◇EN	G3L22N✱✱✱-WM04T◇◇EN	5, 10, 15, 20, 25	3	No	9.5	309.5	□137
		G3L22S✱✱✱-WM04T◇◇EV◆	G3L22N✱✱✱-WM04T◇◇EV◆			Yes	11	370.5	□137

Note: A reduction ratio will be indicated as ✱✱✱ in the nomenclature. In addition, a supply voltage/certification code will be indicated as ◇◇, and a brake specification will be indicated as ◆.
Note: Please refer to page 138 for the performance table.
Note: For the dimensions of the output shaft key, refer to page 981.
Note: The carbon steel output shaft is provided with a tap as a standard specification. Please refer to page 1017 for information of the size.

G3 Type Parallel Shaft | Shaft Diameter **28** | **Foot** Mounting

The values in parentheses ( ) are the indications for gearmotors with brake.
The values in brackets [ ] are the indications for carbon steel output shafts.

<Figure 1>

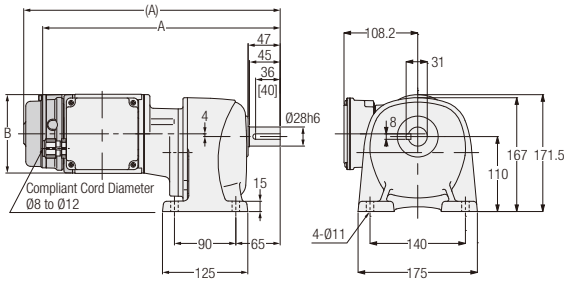

<Figure 2>

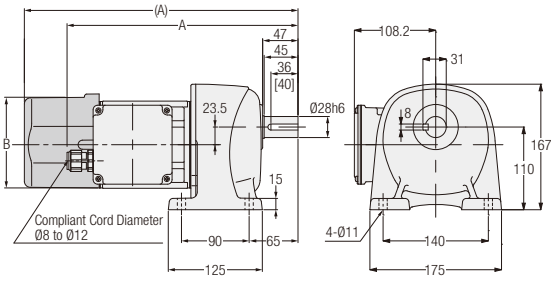

<Figure 3>

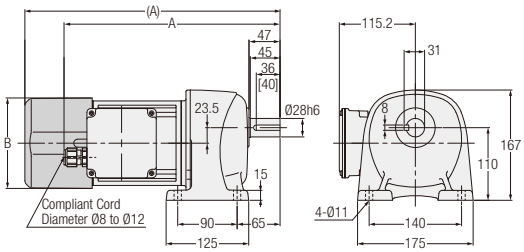

<Figure 4>

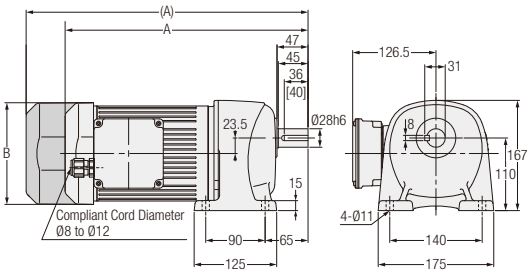

427	Power	Output Shaft: Stainless Steel	Output Shaft: Carbon Steel	Reduction Ratio	Figure Number	Brake	Approx. Weight (kg)	A	B
3-Phase	0.1 kW	G3L28S✱✱✱-WM01T◇◇EN	G3L28N✱✱✱-WM01T◇◇EN	300, 375, 450	1	No	10	348.5	Ø115
		G3L28S✱✱✱-WM01T◇◇EV◆	G3L28N✱✱✱-WM01T◇◇EV◆			Yes	11.5	376	Ø115
	0.2 kW	G3L28S✱✱✱-WM02T◇◇EN	G3L28N✱✱✱-WM02T◇◇EN	100, 120, 160, 200	2	No	9.5	307.5	Ø115
		G3L28S✱✱✱-WM02T◇◇EV◆	G3L28N✱✱✱-WM02T◇◇EV◆			Yes	11	364	□126
	0.4 kW	G3L28S✱✱✱-WM04T◇◇EN	G3L28N✱✱✱-WM04T◇◇EN	30, 40, 50, 60, 80, 100	3	No	11.5	325.5	□137
		G3L28S✱✱✱-WM04T◇◇EV◆	G3L28N✱✱✱-WM04T◇◇EV◆			Yes	13	386.5	□137
	0.75 kW	G3L28S✱✱✱-WR08T◇◇EN	G3L28N✱✱✱-WR08T◇◇EN	5, 10, 15, 20, 25	4	No	18.5	368	□154
		G3L28S✱✱✱-WR08T◇◇EV◆	G3L28N✱✱✱-WR08T◇◇EV◆			Yes	21	427	□154

Note: A reduction ratio will be indicated as ✱✱✱ in the nomenclature. In addition, a supply voltage/certification code will be indicated as ◇◇, and a brake specification will be indicated as ◆.
Note: Please refer to page 138 for the performance table.
Note: For the dimensions of the output shaft key, refer to page 981.
Note: The carbon steel output shaft is provided with a tap as a standard specification. Please refer to page 1017 for information of the size.

G3 Type Parallel Shaft | Shaft Diameter **32** | **Foot** Mounting

The values in parentheses ( ) are the indications for gearmotors with brake.
The values in brackets [ ] are the indications for carbon steel output shafts.

<Figure 1>

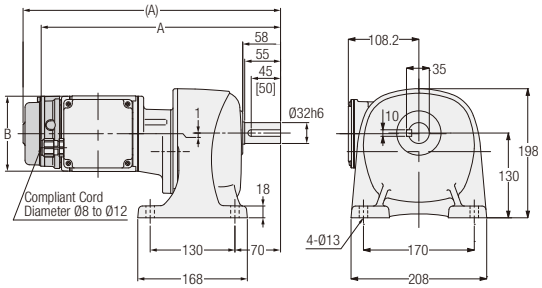

<Figure 2>

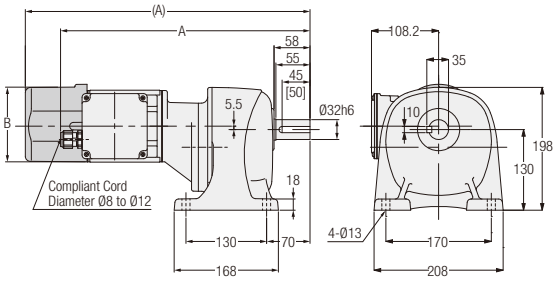

<Figure 3>

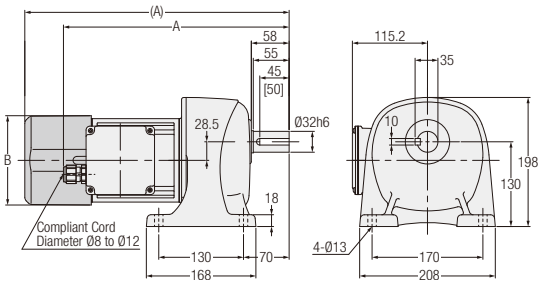

<Figure 4>

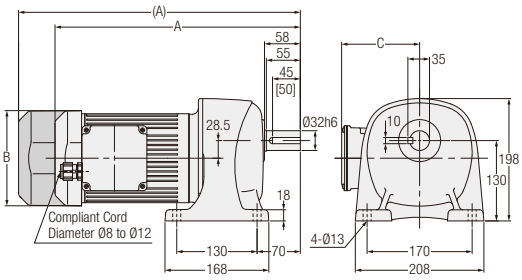

Number of Phases	Power	Output Shaft: Stainless Steel	Output Shaft: Carbon Steel	Reduction Ratio	Figure Number	Brake	Approx. Weight (kg)	A	B	C
3-Phase	0.1 kW	G3L32S✱✱✱-WM01T◇◇EN	G3L32N✱✱✱-WM01T◇◇EN	600, 750, 900, 1200	1	No	13	367.5	Ø115	-
		G3L32S✱✱✱-WM01T◇◇EV◆	G3L32N✱✱✱-WM01T◇◇EV◆			Yes	14.5	395	Ø115	-
	0.2 kW	G3L32S✱✱✱-WM02T◇◇EN	G3L32N✱✱✱-WM02T◇◇EN	300, 375, 450	2	No	13.5	402.5	Ø115	-
		G3L32S✱✱✱-WM02T◇◇EV◆	G3L32N✱✱✱-WM02T◇◇EV◆			Yes	15	459	□126	-
	0.4 kW	G3L32S✱✱✱-WM04T◇◇EN	G3L32N✱✱✱-WM04T◇◇EN	100, 120, 160, 200	3	No	14.5	344.5	□137	115.2
		G3L32S✱✱✱-WM04T◇◇EV◆	G3L32N✱✱✱-WM04T◇◇EV◆			Yes	16	405.5	□137	115.2
	0.75 kW	G3L32S✱✱✱-WR08T◇◇EN	G3L32N✱✱✱-WR08T◇◇EN	30, 40, 50, 60, 80, 100	4	No	22	397	□154	126.5
		G3L32S✱✱✱-WR08T◇◇EV◆	G3L32N✱✱✱-WR08T◇◇EV◆			Yes	24.5	456	□154	126.5
	1.5 kW	G3L32S✱✱✱-WR15T◇◇EN	G3L32N✱✱✱-WR15T◇◇EN	5, 10, 15, 20, 25	4	No	28	433	□178	137.5

Note: A reduction ratio will be indicated as ✱✱✱ in the nomenclature. In addition, a supply voltage/certification code will be indicated as ◇◇, and a brake specification will be indicated as ◆.
Note: There are no gearmotors with motor power of 1.5 kW that have a brake.
Note: Please refer to page 138 for the performance table.
Note: For the dimensions of the output shaft key, refer to page 981.
Note: The carbon steel output shaft is provided with a tap as a standard specification. Please refer to page 1017 for information of the size.

G3 Type Parallel Shaft | Shaft Diameter **40** | **Foot** Mounting

The values in parentheses ( ) are the indications for gearmotors with brake.
The values in brackets [ ] are the indications for carbon steel output shafts.

<Figure 1>

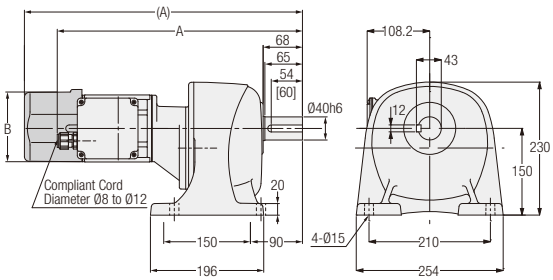

<Figure 2>

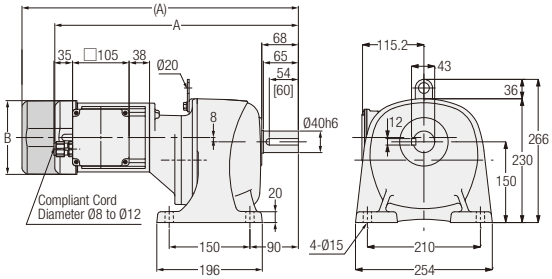

<Figure 3>

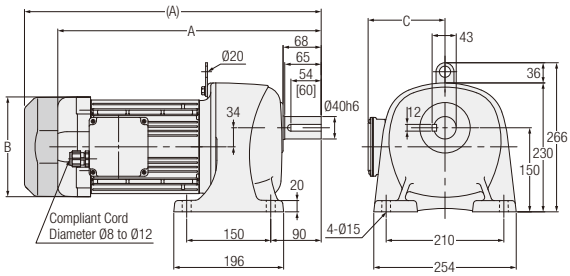

Note: Gearmotors with a motor power of 0.75 kW does not include the hanging plate.

Number of Phases	Power	Output Shaft: Stainless Steel	Output Shaft: Carbon Steel	Reduction Ratio	Figure Number	Brake	Approx. Weight (kg)	A	B	C
3-Phase	0.2 kW	G3L40S✱✱✱-WM02T◇◇EN	G3L40N✱✱✱-WM02T◇◇EN	600, 750, 900, 1200	1	No	20	424.5	Ø115	-
		G3L40S✱✱✱-WM02T◇◇EV◆	G3L40N✱✱✱-WM02T◇◇EV◆			Yes	21.5	481	□126	-
	0.4 kW	G3L40S✱✱✱-WM04T◇◇EN	G3L40N✱✱✱-WM04T◇◇EN	300, 375, 450	2	No	23	452.5	□137	-
		G3L40S✱✱✱-WM04T◇◇EV◆	G3L40N✱✱✱-WM04T◇◇EV◆			Yes	24.5	513.5	□137	-
	0.75 kW	G3L40S✱✱✱-WR08T◇◇EN	G3L40N✱✱✱-WR08T◇◇EN	100, 120, 160, 200	3	No	28.5	419	□154	126.5
		G3L40S✱✱✱-WR08T◇◇EV◆	G3L40N✱✱✱-WR08T◇◇EV◆			Yes	31	478	□154	126.5
	1.5 kW	G3L40S✱✱✱-WR15T◇◇EN	G3L40N✱✱✱-WR15T◇◇EN	30, 40, 50, 60, 80, 100	3	No	35	470	□178	137.5
	2.2 kW	G3L40S✱✱✱-WR22T◇◇EN	G3L40N✱✱✱-WR22T◇◇EN	5, 10, 15, 20, 25	3	No	41.5	503.5	□192	147.5

Note: A reduction ratio will be indicated as ✱✱✱ in the nomenclature. In addition, a supply voltage/certification code will be indicated as ◇◇, and a brake specification will be indicated as ◆.
Note: There are no gearmotors with motor power of 1.5 kW and 2.2 kW that have a brake.
Note: Please refer to page 138 for the performance table.
Note: For the dimensions of the output shaft key, refer to page 981.
Note: The carbon steel output shaft is provided with a tap as a standard specification. Please refer to page 1017 for information of the size.

G3 Type Parallel Shaft | Shaft Diameter 50 | Foot Mounting

The values in parentheses ( ) are the indications for gearmotors with brake.
The values in brackets [ ] are the indications for carbon steel output shafts.

<Figure 1>

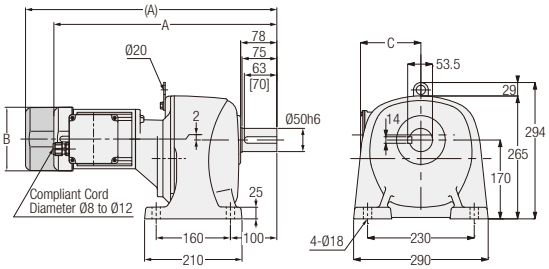

<Figure 2>

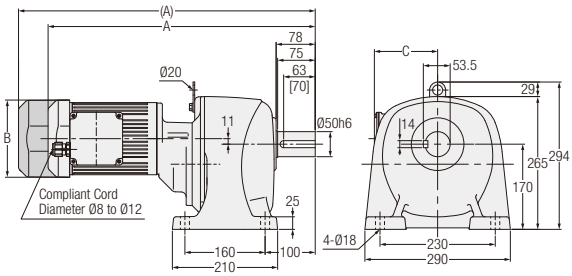

<Figure 3>

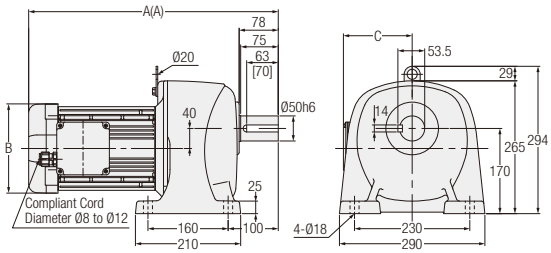

Number of Phases	Power	Output Shaft: Stainless Steel	Output Shaft: Carbon Steel	Reduction Ratio	Figure Number	Brake	Approx. Weight (kg)	A	B	C
3-Phase	0.4 kW	G3L50S✱✱✱-WM04T◇◇EN	G3L50N✱✱✱-WM04T◇◇EN	600, 750, 900, 1200	1	No	52.5	480.5	□137	115.2
		G3L50S✱✱✱-WM04T◇◇EV◆	G3L50N✱✱✱-WM04T◇◇EV◆			Yes	54	541.5	□137	115.2
	0.75 kW	G3L50S✱✱✱-WR08T◇◇EN	G3L50N✱✱✱-WR08T◇◇EN	300, 375, 450	2	No	60	533	□154	126.5
		G3L50S✱✱✱-WR08T◇◇EV◆	G3L50N✱✱✱-WR08T◇◇EV◆			Yes	62.5	592	□154	126.5
	1.5 kW	G3L50S✱✱✱-WR15T◇◇EN	G3L50N✱✱✱-WR15T◇◇EN	100, 120, 160, 200	3	No	64.5	498	□178	137.5
	2.2 kW	G3L50S✱✱✱-WR22T◇◇EN	G3L50N✱✱✱-WR22T◇◇EN	30, 40, 50, 60, 80, 100	3	No	71.5	547.5	□192	147.5

Note: A reduction ratio will be indicated as ✱✱✱ in the nomenclature. In addition, a supply voltage/certification code will be indicated as ◇◇, and a brake specification will be indicated as ◆.
Note: There are no gearmotors with motor power of 1.5 kW and 2.2 kW that have a brake.
Note: Please refer to page 139 for the performance table.
Note: For the dimensions of the output shaft key, refer to page 981.
Note: The carbon steel output shaft is provided with a tap as a standard specification. Please refer to page 1017 for information of the size.

GA Type Parallel Shaft | Shaft Diameter **50** | **Foot** Mounting

The values in parentheses ( ) are the indications for gearmotors with brake.
The values in brackets [ ] are the indications for carbon steel output shafts.

<Figure 1>

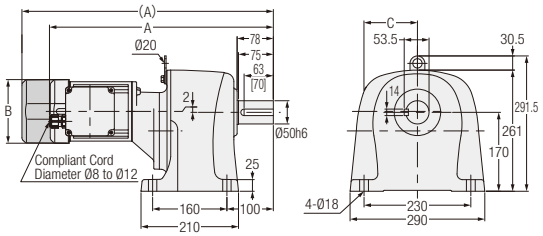

<Figure 2>

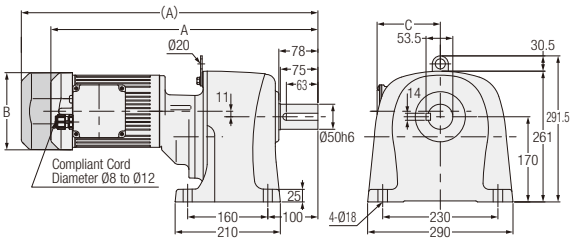

<Figure 3>

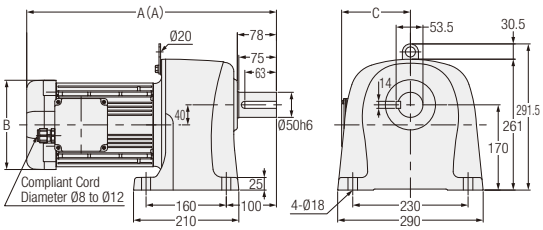

Number of Phases	Power	Output Shaft: Stainless Steel	Output Shaft: Carbon Steel	Reduction Ratio	Figure Number	Brake	Approx. Weight (kg)	A	B	C
3-Phase	0.4 kW	GAL50S✱✱✱-WM04T◇◇EN	GAL50N✱✱✱-WM04T◇◇EN	600, 750, 900, 1200	1	No	33	480.5	□137	115.2
		GAL50S✱✱✱-WM04T◇◇EV◆	GAL50N✱✱✱-WM04T◇◇EV◆			Yes	34.5	541.5	□137	115.2
	0.75 kW	GAL50S✱✱✱-WR08T◇◇EN	GAL50N✱✱✱-WR08T◇◇EN	300, 375, 450	2	No	40.5	533	□154	126.5
		GAL50S✱✱✱-WR08T◇◇EV◆	GAL50N✱✱✱-WR08T◇◇EV◆			Yes	43	592	□154	126.5
	1.5 kW	GAL50S✱✱✱-WR15T◇◇EN	GAL50N✱✱✱-WR15T◇◇EN	100, 120, 160, 200	3	No	45	498	□178	137.5
	2.2 kW	GAL50S✱✱✱-WR22T◇◇EN	GAL50N✱✱✱-WR22T◇◇EN	30, 40, 50, 60, 80, 100	3	No	52	547.5	□192	147.5

Note: A reduction ratio will be indicated as ✱✱✱ in the nomenclature. In addition, a supply voltage/certification code will be indicated as ◇◇, and a brake specification will be indicated as ◆.
Note: There are no gearmotors with motor power of 1.5 kW and 2.2 kW that have a brake.
Note: Please refer to page 141 for the performance table.
Note: For the dimensions of the output shaft key, refer to page 981.
Note: The carbon steel output shaft is provided with a tap as a standard specification. Please refer to page 1017 for information of the size.

G Type Parallel Shaft | Shaft Diameter 12 | Flange Mounting

The values in parentheses ( ) are the indications for gearmotors with brake.

<Figure 1>

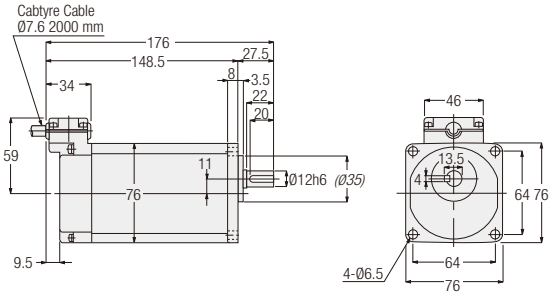

<Figure 2>

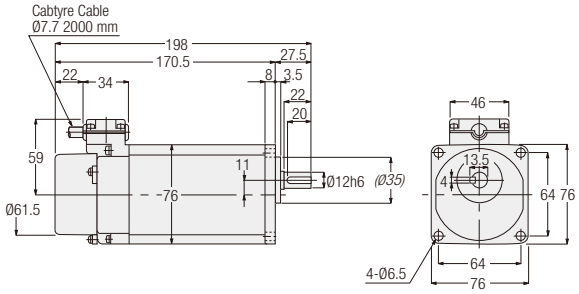

Note: The italic dimension indicates areas with remaining casting surface. Please add 0.5 mm or more to the italic dimension for the diameter of the mating hole.

Number of Phases	Power	Part Number	Reduction Ratio	Figure Number	Brake	Approx. Weight (kg)
3-Phase	15 W	GFW-12-✱✱✱-T15	5, 7.5, 10, 15, 20, 25, 30, 40, 50, 60, 80, 100, 120, 160, 200, 240	1	No	2
		GFV-12-✱✱✱-T15		2	Yes	
	25 W	GFW-12-✱✱✱-T25	5, 7.5, 10, 15, 20, 25, 30, 40, 50, 60, 80, 100, 120	1	No	2
		GFV-12-✱✱✱-T25		2	Yes	
	40 W	GFW-12-✱✱✱-T40	5, 7.5, 10, 15, 20, 25, 30, 40, 50, 60	1	No	2
		GFV-12-✱✱✱-T40		2	Yes	
1-Phase	15 W	GFW-12-✱✱✱-S15	5, 7.5, 10, 15, 20, 25, 30, 40, 50, 60, 80, 100, 120, 160, 200, 240	1	No	2
		GFV-12-✱✱✱-S15		2	Yes	
	25 W	GFW-12-✱✱✱-S25	5, 7.5, 10, 15, 20, 25, 30, 40, 50, 60, 80, 100, 120	1	No	2
		GFV-12-✱✱✱-S25		2	Yes	

Note: A reduction ratio will be indicated as ✱✱✱ in the nomenclature.
Note: Please refer to page 136 for the performance table.

G Type Parallel Shaft | Shaft Diameter 15 | Flange Mounting

<Figure 3>

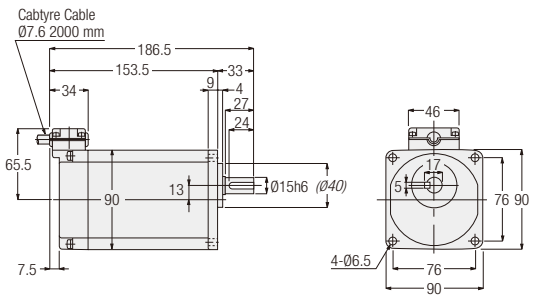

<Figure 4>

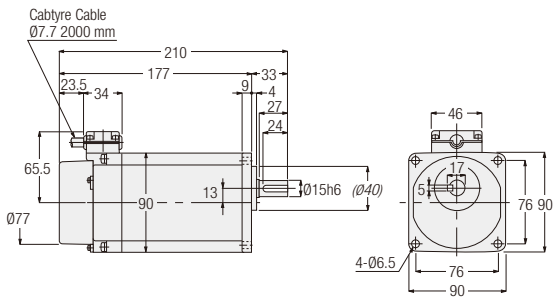

Note: The italic dimension indicates areas with remaining casting surface. Please add 0.5 mm or more to the italic dimension for the diameter of the mating hole.

Number of Phases	Power	Part Number	Reduction Ratio	Figure Number	Brake	Approx. Weight (kg)
3-Phase	25 W	GFW-15-✱✱✱-T25	160, 200, 240	3	No	3
		GFV-15-✱✱✱-T25		4	Yes	
	40 W	GFW-15-✱✱✱-T40	80, 100, 120	3	No	3
		GFV-15-✱✱✱-T40		4	Yes	
	60 W	GFW-15-✱✱✱-T60	5, 7.5, 10, 15, 20, 25, 30, 40, 50, 60	3	No	3
		GFV-15-✱✱✱-T60		4	Yes	
1-Phase	25 W	GFW-15-✱✱✱-S25	160, 200, 240	3	No	3
		GFV-15-✱✱✱-S25		4	Yes	
	40 W	GFW-15-✱✱✱-S40	5, 7.5, 10, 15, 20, 25, 30, 40, 50, 60, 80, 100, 120	3	No	3
		GFV-15-✱✱✱-S40		4	Yes	

Note: A reduction ratio will be indicated as ✱✱✱ in the nomenclature.
Note: Please refer to page 136 for the performance table.

G Type Parallel Shaft | Shaft Diameter 18 | Flange Mounting

The values in parentheses ( ) are the indications for gearmotors with brake.
The values in brackets [ ] are the indications for carbon steel output shafts.

<Figure 1>

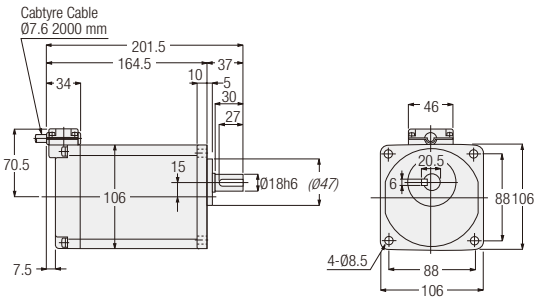

<Figure 2>

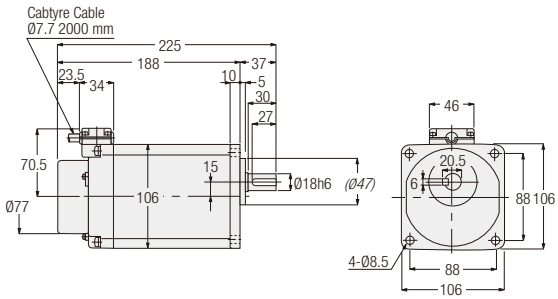

Note: The italic dimension indicates areas with remaining casting surface. Please add 0.5 mm or more to the italic dimension for the diameter of the mating hole.

Number of Phases	Power	Part Number	Reduction Ratio	Figure Number	Brake	Approx. Weight (kg)
3-Phase	40 W	GFW-18-✱✱✱-T40	160, 200, 240	1	No	4
		GFV-18-✱✱✱-T40		2	Yes	
	60 W	GFW-18-✱✱✱-T60	80, 100, 120, 160, 200, 240	1	No	4
		GFV-18-✱✱✱-T60		2	Yes	
	90 W	GFW-18-✱✱✱-T90	5, 7.5, 10, 15, 20, 25, 30, 40, 50, 60, 80, 100, 120, 160, 200, 240	1	No	4
		GFV-18-✱✱✱-T90		2	Yes	
1-Phase	40 W	GFW-18-✱✱✱-S40	160, 200, 240	1	No	4
		GFV-18-✱✱✱-S40		2	Yes	
	60 W	GFW-18-✱✱✱-S60	5, 7.5, 10, 15, 20, 25, 30, 40, 50, 60, 80, 100, 120, 160, 200, 240	1	No	4
		GFV-18-✱✱✱-S60		2	Yes	

Note: A reduction ratio will be indicated as ✱✱✱ in the nomenclature.
Note: Please refer to page 136 for the performance table.

G3 Type Parallel Shaft | Shaft Diameter 18 | Flange Mounting

<Figure 3>

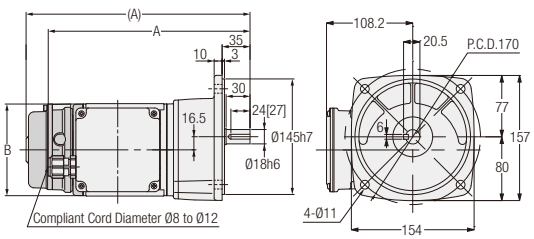

<Figure 4>

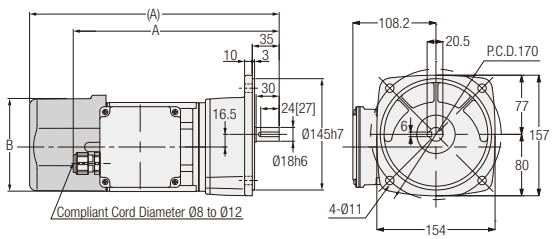

Number of Phases	Power	Output Shaft: Stainless Steel	Output Shaft: Carbon Steel	Reduction Ratio	Figure Number	Brake	Approx. Weight (kg)	A	B
3-Phase	0.1 kW	G3F18S✱✱✱-WM01T◇◇EN	G3F18N✱✱✱-WM01T◇◇EN	5, 10, 15, 20, 25, 30, 40, 50	3	No	6.5	253.5	Ø115
		G3F18S✱✱✱-WM01T◇◇EV◆	G3F18N✱✱✱-WM01T◇◇EV◆			Yes	8	281	Ø115
	0.2 kW	G3F18S✱✱✱-WM02T◇◇EN	G3F18N✱✱✱-WM02T◇◇EN	5, 10, 15, 20, 25	4	No	7	268.5	Ø115
		G3F18S✱✱✱-WM02T◇◇EV◆	G3F18N✱✱✱-WM02T◇◇EV◆			Yes	8.5	325	□126

Note: A reduction ratio will be indicated as ✱✱✱ in the nomenclature. In addition, a supply voltage/certification code will be indicated as ◇◇, and a brake specification will be indicated as ◆.
Note: Please refer to page 138 for the performance table.
Note: For the dimensions of the output shaft key, refer to page 981.
Note: The carbon steel output shaft is provided with a tap as a standard specification. Please refer to page 1017 for information of the size.

G3 Type Parallel Shaft | Shaft Diameter 22 | Flange Mounting

The values in parentheses ( ) are the indications for gearmotors with brake.
The values in brackets [ ] are the indications for carbon steel output shafts.

<Figure 1>

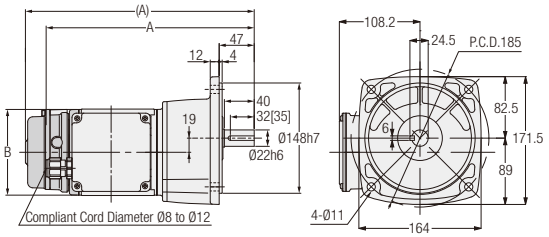

<Figure 2>

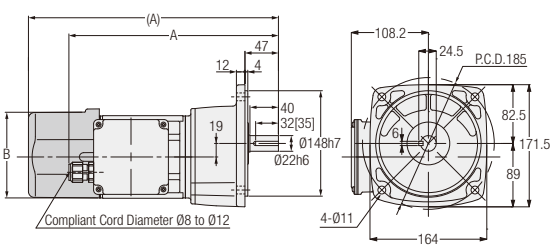

<Figure 3>

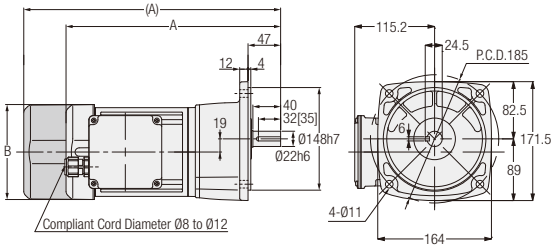

Number of Phases	Power	Output Shaft: Stainless Steel	Output Shaft: Carbon Steel	Reduction Ratio	Figure Number	Brake	Approx. Weight (kg)	A	B
3-Phase	0.1 kW	G3F22S✱✱✱-WM01T◇◇EN	G3F22N✱✱✱-WM01T◇◇EN	60, 80, 100, 120, 160, 200	1	No	7.5	279.5	Ø115
		G3F22S✱✱✱-WM01T◇◇EV◆	G3F22N✱✱✱-WM01T◇◇EV◆			Yes	9	307	Ø115
	0.2 kW	G3F22S✱✱✱-WM02T◇◇EN	G3F22N✱✱✱-WM02T◇◇EN	30, 40, 50, 60, 80, 100	2	No	8	294.5	Ø115
		G3F22S✱✱✱-WM02T◇◇EV◆	G3F22N✱✱✱-WM02T◇◇EV◆			Yes	9.5	351	□126
	0.4 kW	G3F22S✱✱✱-WM04T◇◇EN	G3F22N✱✱✱-WM04T◇◇EN	5, 10, 15, 20, 25	3	No	10	309.5	□137
		G3F22S✱✱✱-WM04T◇◇EV◆	G3F22N✱✱✱-WM04T◇◇EV◆			Yes	11.5	370.5	□137

Note: A reduction ratio will be indicated as ✱✱✱ in the nomenclature. In addition, a supply voltage/certification code will be indicated as ◇◇, and a brake specification will be indicated as ◆.
Note: Please refer to page 138 for the performance table.
Note: For the dimensions of the output shaft key, refer to page 981.
Note: The carbon steel output shaft is provided with a tap as a standard specification. Please refer to page 1017 for information of the size.

G3 Type Parallel Shaft | Shaft Diameter **28** | **Flange** Mounting

The values in parentheses ( ) are the indications for gearmotors with brake.
The values in brackets [ ] are the indications for carbon steel output shafts.

<Figure 1>

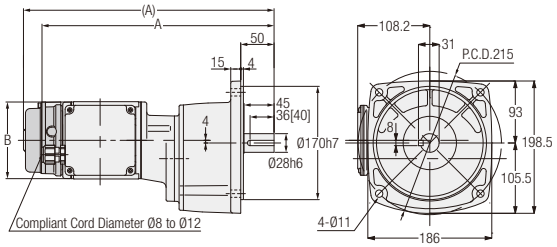

<Figure 2>

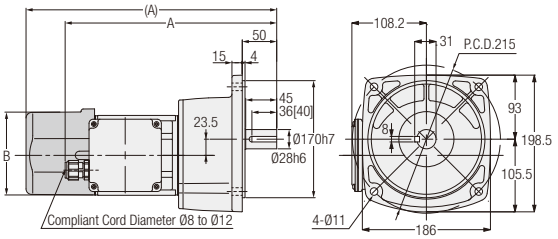

<Figure 3>

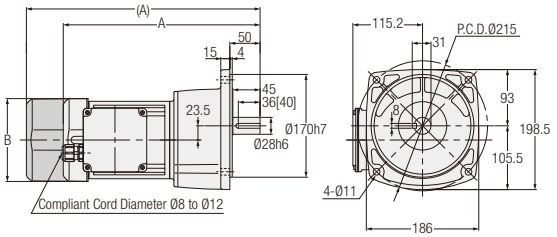

<Figure 4>

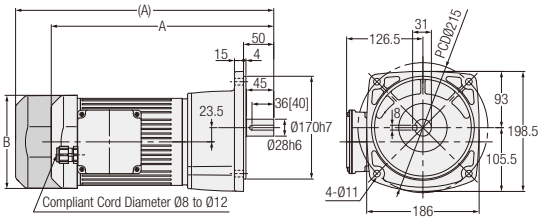

Number of Phases	Power	Output Shaft: Stainless Steel	Output Shaft: Carbon Steel	Reduction Ratio	Figure Number	Brake	Approx. Weight (kg)	A	B
3-Phase	0.1 kW	G3F28S✱✱✱-WM01T◇◇EN	G3F28N✱✱✱-WM01T◇◇EN	300, 375, 450	1	No	10.5	348.5	Ø115
		G3F28S✱✱✱-WM01T◇◇EV◆	G3F28N✱✱✱-WM01T◇◇EV◆			Yes	12	376	Ø115
	0.2 kW	G3F28S✱✱✱-WM02T◇◇EN	G3F28N✱✱✱-WM02T◇◇EN	100, 120, 160, 200	2	No	10	307.5	Ø115
		G3F28S✱✱✱-WM02T◇◇EV◆	G3F28N✱✱✱-WM02T◇◇EV◆			Yes	11.5	364	□126
	0.4 kW	G3F28S✱✱✱-WM04T◇◇EN	G3F28N✱✱✱-WM04T◇◇EN	30, 40, 50, 60, 80, 100	3	No	12	325.5	□137
		G3F28S✱✱✱-WM04T◇◇EV◆	G3F28N✱✱✱-WM04T◇◇EV◆			Yes	13.5	386.5	□137
	0.75 kW	G3F28S✱✱✱-WR08T◇◇EN	G3F28N✱✱✱-WR08T◇◇EN	5, 10, 15, 20, 25	4	No	19	368	□154
		G3F28S✱✱✱-WR08T◇◇EV◆	G3F28N✱✱✱-WR08T◇◇EV◆			Yes	21.5	427	□154

Note: A reduction ratio will be indicated as ✱✱✱ in the nomenclature. In addition, a supply voltage/certification code will be indicated as ◇◇, and a brake specification will be indicated as ◆.
Note: Please refer to page 138 for the performance table.
Note: For the dimensions of the output shaft key, refer to page 981.
Note: The carbon steel output shaft is provided with a tap as a standard specification. Please refer to page 1017 for information of the size.

G3 Type Parallel Shaft | Shaft Diameter 32 | Flange Mounting

The values in parentheses ( ) are the indications for gearmotors with brake.
The values in brackets [ ] are the indications for carbon steel output shafts.

<Figure 1>

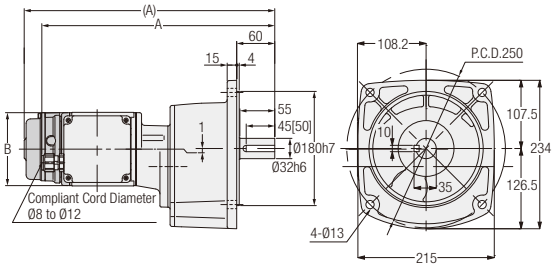

<Figure 2>

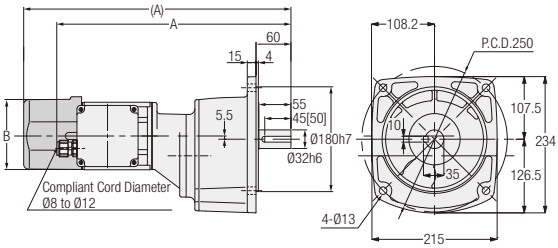

<Figure 3>

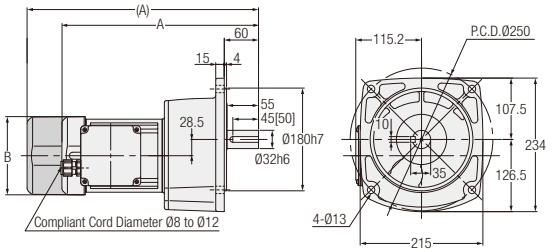

<Figure 4>

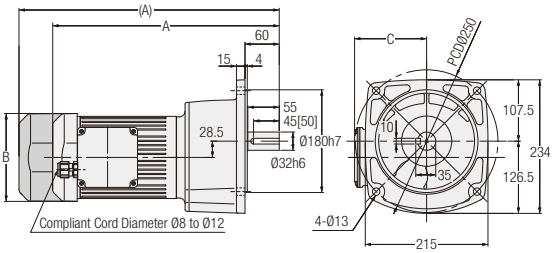

Number of Phases	Power	Output Shaft: Stainless Steel	Output Shaft: Carbon Steel	Reduction Ratio	Figure Number	Brake	Approx. Weight (kg)	A	B	C
3-Phase	0.1 kW	G3F32S✱✱✱-WM01T◇◇EN	G3F32N✱✱✱-WM01T◇◇EN	600, 750, 900, 1200	1	No	13.5	367.5	Ø115	-
		G3F32S✱✱✱-WM01T◇◇EV◆	G3F32N✱✱✱-WM01T◇◇EV◆			Yes	15	395	Ø115	-
	0.2 kW	G3F32S✱✱✱-WM02T◇◇EN	G3F32N✱✱✱-WM02T◇◇EN	300, 375, 450	2	No	14	402.5	Ø115	-
		G3F32S✱✱✱-WM02T◇◇EV◆	G3F32N✱✱✱-WM02T◇◇EV◆			Yes	15.5	459	□126	-
	0.4 kW	G3F32S✱✱✱-WM04T◇◇EN	G3F32N✱✱✱-WM04T◇◇EN	100, 120, 160, 200	3	No	15	344.5	□137	-
		G3F32S✱✱✱-WM04T◇◇EV◆	G3F32N✱✱✱-WM04T◇◇EV◆			Yes	16.5	405.5	□137	-
	0.75 kW	G3F32S✱✱✱-WR08T◇◇EN	G3F32N✱✱✱-WR08T◇◇EN	30, 40, 50, 60, 80, 100	4	No	22.5	397	□154	126.5
		G3F32S✱✱✱-WR08T◇◇EV◆	G3F32N✱✱✱-WR08T◇◇EV◆			Yes	25	456	□154	126.5
	1.5 kW	G3F32S✱✱✱-WR15T◇◇EN	G3F32N✱✱✱-WR15T◇◇EN	5, 10, 15, 20, 25	4	No	28.5	433	□178	137.5

Note: A reduction ratio will be indicated as ✱✱✱ in the nomenclature. In addition, a supply voltage/certification code will be indicated as ◇◇, and a brake specification will be indicated as ◆.
Note: There are no gearmotors with motor power of 1.5 kW that have a brake.
Note: Please refer to page 138 for the performance table.
Note: For the dimensions of the output shaft key, refer to page 981.
Note: The carbon steel output shaft is provided with a tap as a standard specification. Please refer to page 1017 for information of the size.

G3 Type Parallel Shaft | Shaft Diameter **40** | **Flange** Mounting

The values in parentheses ( ) are the indications for gearmotors with brake.
The values in brackets [ ] are the indications for carbon steel output shafts.

<Figure 1>

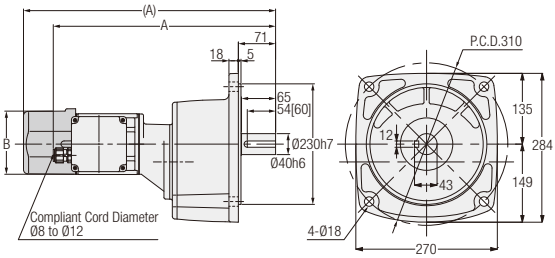

<Figure 2>

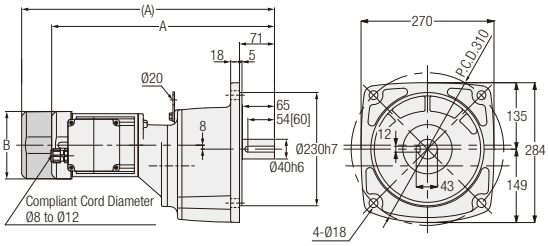

<Figure 3>

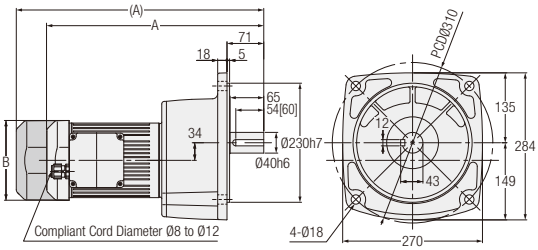

<Figure 4>

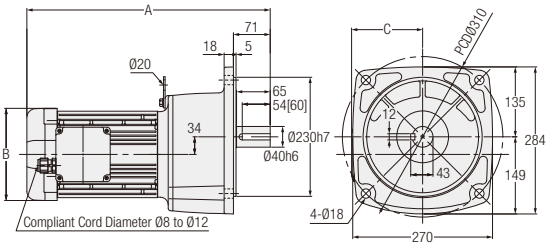

Number of Phases	Power	Output Shaft: Stainless Steel	Output Shaft: Carbon Steel	Reduction Ratio	Figure Number	Brake	Approx. Weight (kg)	A	B	C
3-Phase	0.2 kW	G3F40S✱✱✱-WM02T◇◇EN	G3F40N✱✱✱-WM02T◇◇EN	600, 750, 900, 1200	1	No	21.5	424.5	Ø115	-
		G3F40S✱✱✱-WM02T◇◇EV◆	G3F40N✱✱✱-WM02T◇◇EV◆			Yes	23	481	□126	-
	0.4 kW	G3F40S✱✱✱-WM04T◇◇EN	G3F40N✱✱✱-WM04T◇◇EN	300, 375, 450	2	No	24.5	452.5	□137	-
		G3F40S✱✱✱-WM04T◇◇EV◆	G3F40N✱✱✱-WM04T◇◇EV◆			Yes	26	513.5	□137	-
	0.75 kW	G3F40S✱✱✱-WR08T◇◇EN	G3F40N✱✱✱-WR08T◇◇EN	100, 120, 160, 200	3	No	30	419	□154	-
		G3F40S✱✱✱-WR08T◇◇EV◆	G3F40N✱✱✱-WR08T◇◇EV◆			Yes	32.5	478	□154	-
	1.5 kW	G3F40S✱✱✱-WR15T◇◇EN	G3F40N✱✱✱-WR15T◇◇EN	30, 40, 50, 60, 80, 100	4	No	36.5	470	□178	137.5
	2.2 kW	G3F40S✱✱✱-WR22T◇◇EN	G3F40N✱✱✱-WR22T◇◇EN	5, 10, 15, 20, 25	4	No	43	503.5	□192	147.5

Note: A reduction ratio will be indicated as ✱✱✱ in the nomenclature. In addition, a supply voltage/certification code will be indicated as ◇◇, and a brake specification will be indicated as ◆.
Note: There are no gearmotors with motor power of 1.5 kW and 2.2 kW that have a brake.
Note: Please refer to page 138 for the performance table.
Note: For the dimensions of the output shaft key, refer to page 981.
Note: The carbon steel output shaft is provided with a tap as a standard specification. Please refer to page 1017 for information of the size.

G3 Type Parallel Shaft | Shaft Diameter 50 | Flange Mounting

The values in parentheses ( ) are the indications for gearmotors with brake.
The values in brackets [ ] are the indications for carbon steel output shafts.

<Figure 1>

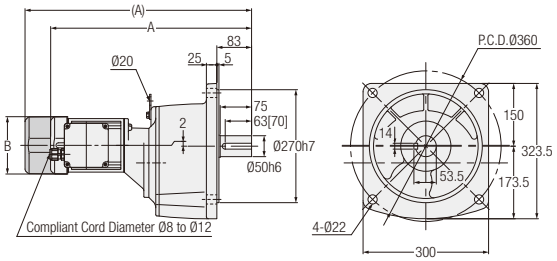

<Figure 2>

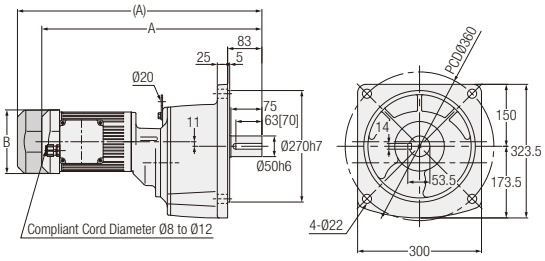

<Figure 3>

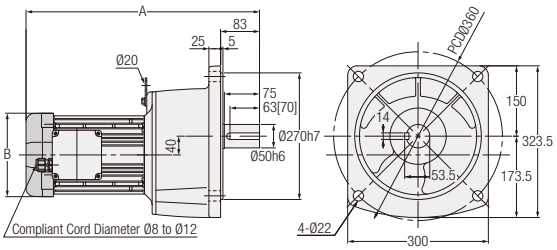

Number of Phases	Power	Output Shaft: Stainless Steel	Output Shaft: Carbon Steel	Reduction Ratio	Figure Number	Brake	Approx. Weight (kg)	A	B
3-Phase	0.4 kW	G3F50S✱✱✱-WM04T◇◇EN	G3F50N✱✱✱-WM04T◇◇EN	600, 750, 900, 1200	1	No	57.5	480.5	□137
		G3F50S✱✱✱-WM04T◇◇EV◆	G3F50N✱✱✱-WM04T◇◇EV◆			Yes	59	541.5	□137
	0.75 kW	G3F50S✱✱✱-WR08T◇◇EN	G3F50N✱✱✱-WR08T◇◇EN	300, 375, 450	2	No	65	533	□154
		G3F50S✱✱✱-WR08T◇◇EV◆	G3F50N✱✱✱-WR08T◇◇EV◆			Yes	67.5	592	□154
	1.5 kW	G3F50S✱✱✱-WR15T◇◇EN	G3F50N✱✱✱-WR15T◇◇EN	100, 120, 160, 200	3	No	69.5	498	□178
	2.2 kW	G3F50S✱✱✱-WR22T◇◇EN	G3F50N✱✱✱-WR22T◇◇EN	30, 40, 50, 60, 80, 100	3	No	76.5	547.5	□192

Note: A reduction ratio will be indicated as ✱✱✱ in the nomenclature. In addition, a supply voltage/certification code will be indicated as ◇◇, and a brake specification will be indicated as ◆.
Note: There are no gearmotors with motor power of 1.5 kW and 2.2 kW that have a brake.
Note: Please refer to page 139 for the performance table.
Note: For the dimensions of the output shaft key, refer to page 981.
Note: The carbon steel output shaft is provided with a tap as a standard specification. Please refer to page 1017 for information of the size.

G3 Type Parallel Shaft | Shaft Diameter **18** | **Small Flange** Mounting

The values in parentheses ( ) are the indications for gearmotors with brake.
The values in brackets [ ] are the indications for carbon steel output shafts.

<Figure 1>

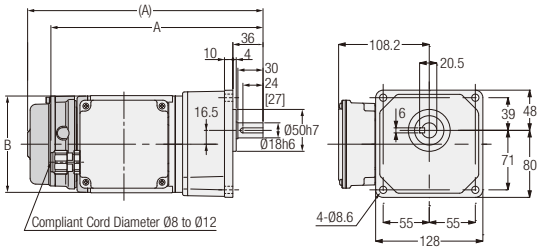

<Figure 2>

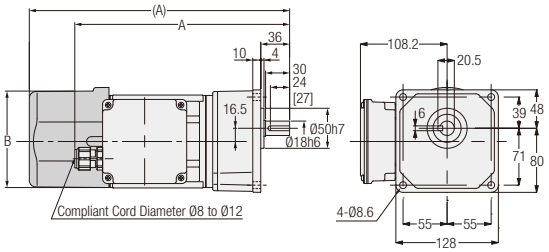

Number of Phases	Power	Output Shaft: Stainless Steel	Output Shaft: Carbon Steel	Reduction Ratio	Figure Number	Brake	Approx. Weight (kg)	A	B
3-Phase	0.1 kW	G3K18S✻✻✻-WM01T◇◇EN	G3K18N✻✻✻-WM01T◇◇EN	5, 10, 15, 20, 25, 30, 40, 50	1	No	6.5	253.5	Ø115
		G3K18S✻✻✻-WM01T◇◇EV◆	G3K18N✻✻✻-WM01T◇◇EV◆			Yes	8	281	Ø115
	0.2 kW	G3K18S✻✻✻-WM02T◇◇EN	G3K18N✻✻✻-WM02T◇◇EN	5, 10, 15, 20, 25	2	No	7	268.5	Ø115
		G3K18S✻✻✻-WM02T◇◇EV◆	G3K18N✻✻✻-WM02T◇◇EV◆			Yes	8.5	325	□126

Note: A reduction ratio will be indicated as ✻✻✻ in the nomenclature. In addition, a supply voltage/certification code will be indicated as ◇◇, and a brake specification will be indicated as ◆.
Note: Please refer to page 138 for the performance table.
Note: For the dimensions of the output shaft key, refer to page 981.
Note: The carbon steel output shaft is provided with a tap as a standard specification. Please refer to page 1017 for information of the size.

G3 Type Parallel Shaft | Shaft Diameter 22 | Small Flange Mounting

The values in parentheses ( ) are the indications for gearmotors with brake.
The values in brackets [ ] are the indications for carbon steel output shafts.

<Figure 1>

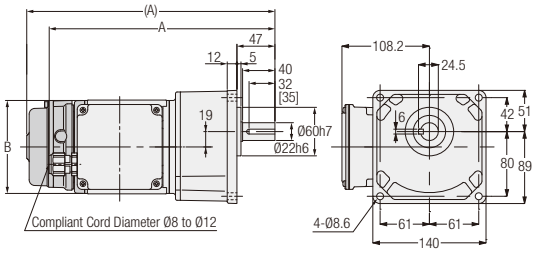

<Figure 2>

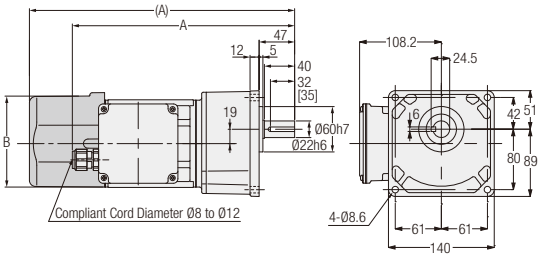

<Figure 3>

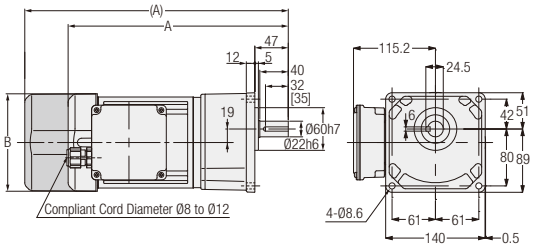

Number of Phases	Power	Output Shaft: Stainless Steel	Output Shaft: Carbon Steel	Reduction Ratio	Figure Number	Brake	Approx. Weight (kg)	A	B
3-Phase	0.1 kW	G3K22S✱✱✱-WM01T◇◇EN	G3K22N✱✱✱-WM01T◇◇EN	60, 80, 100, 120, 160, 200	1	No	7.5	279.5	Ø115
		G3K22S✱✱✱-WM01T◇◇EV◆	G3K22N✱✱✱-WM01T◇◇EV◆			Yes	9	307	Ø115
	0.2 kW	G3K22S✱✱✱-WM02T◇◇EN	G3K22N✱✱✱-WM02T◇◇EN	30, 40, 50, 60, 80, 100	2	No	8	294.5	Ø115
		G3K22S✱✱✱-WM02T◇◇EV◆	G3K22N✱✱✱-WM02T◇◇EV◆			Yes	9.5	351	□126
	0.4 kW	G3K22S✱✱✱-WM04T◇◇EN	G3K22N✱✱✱-WM04T◇◇EN	5, 10, 15, 20, 25	3	No	10	309.5	□137
		G3K22S✱✱✱-WM04T◇◇EV◆	G3K22N✱✱✱-WM04T◇◇EV◆			Yes	11.5	370.5	□137

Note: A reduction ratio will be indicated as ✱✱✱ in the nomenclature. In addition, a supply voltage/certification code will be indicated as ◇◇, and a brake specification will be indicated as ◆.
Note: Please refer to page 138 for the performance table.
Note: For the dimensions of the output shaft key, refer to page 981.
Note: The carbon steel output shaft is provided with a tap as a standard specification. Please refer to page 1017 for information of the size.

G3 Type Parallel Shaft | Shaft Diameter **28** | **Small Flange** Mounting

The values in parentheses ( ) are the indications for gearmotors with brake.
The values in brackets [ ] are the indications for carbon steel output shafts.

<Figure 1>

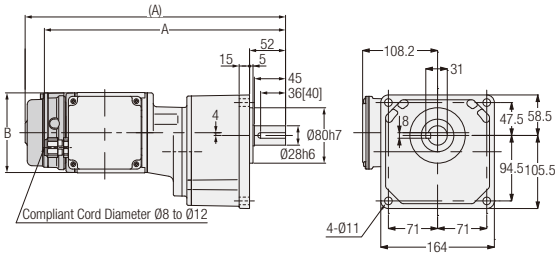

<Figure 2>

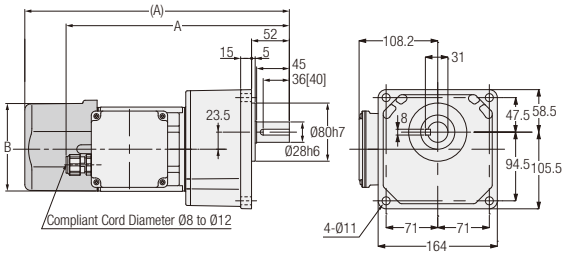

<Figure 3>

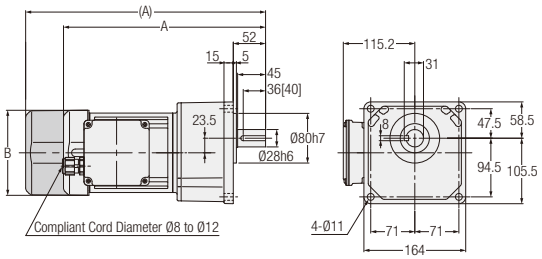

<Figure 4>

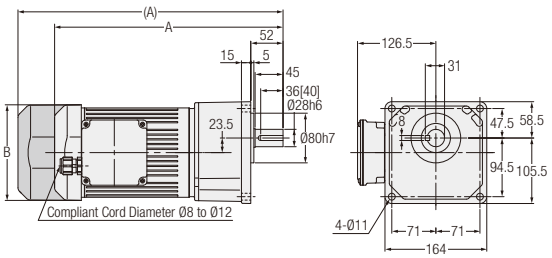

Number of Phases	Power	Output Shaft: Stainless Steel	Output Shaft: Carbon Steel	Reduction Ratio	Figure Number	Brake	Approx. Weight (kg)	A	B
3-Phase	0.1 kW	G3K28S✱✱✱-WM01T◇◇EN	G3K28N✱✱✱-WM01T◇◇EN	300, 375, 450	1	No	10.5	348.5	Ø115
		G3K28S✱✱✱-WM01T◇◇EV◆	G3K28N✱✱✱-WM01T◇◇EV◆			Yes	12	376	Ø115
	0.2 kW	G3K28S✱✱✱-WM02T◇◇EN	G3K28N✱✱✱-WM02T◇◇EN	100, 120, 160, 200	2	No	10	307.5	Ø115
		G3K28S✱✱✱-WM02T◇◇EV◆	G3K28N✱✱✱-WM02T◇◇EV◆			Yes	11.5	364	□126
	0.4 kW	G3K28S✱✱✱-WM04T◇◇EN	G3K28N✱✱✱-WM04T◇◇EN	30, 40, 50, 60, 80, 100	3	No	12	325.5	□137
		G3K28S✱✱✱-WM04T◇◇EV◆	G3K28N✱✱✱-WM04T◇◇EV◆			Yes	13.5	386.5	□137
	0.75 kW	G3K28S✱✱✱-WR08T◇◇EN	G3K28N✱✱✱-WR08T◇◇EN	5, 10, 15, 20, 25	4	No	19	368	□154
		G3K28S✱✱✱-WR08T◇◇EV◆	G3K28N✱✱✱-WR08T◇◇EV◆			Yes	21.5	427	□154

Note: A reduction ratio will be indicated as ✱✱✱ in the nomenclature. In addition, a supply voltage/certification code will be indicated as ◇◇, and a brake specification will be indicated as ◆.
Note: Please refer to page 138 for the performance table.
Note: For the dimensions of the output shaft key, refer to page 981.
Note: The carbon steel output shaft is provided with a tap as a standard specification. Please refer to page 1017 for information of the size.

G3 Type Parallel Shaft | Shaft Diameter **32** | **Small Flange** Mounting

The values in parentheses ( ) are the indications for gearmotors with brake.
The values in brackets [ ] are the indications for carbon steel output shafts.

<Figure 1>

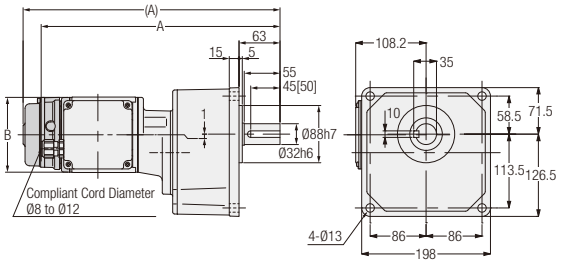

<Figure 2>

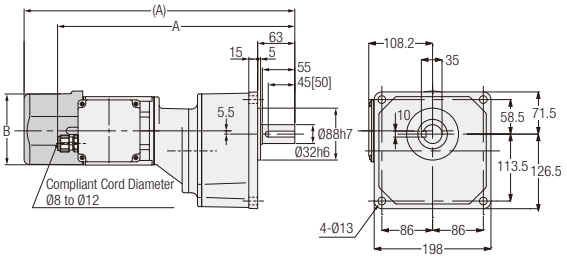

<Figure 3>

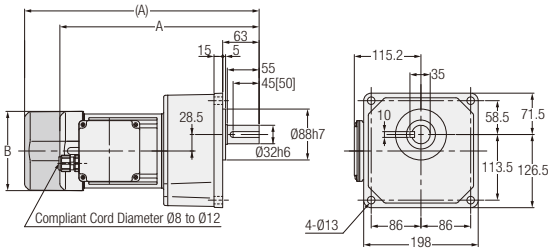

<Figure 4>

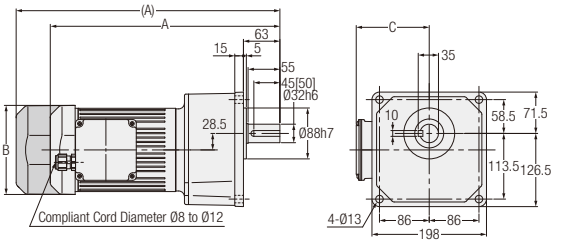

Number of Phases	Power	Output Shaft: Stainless Steel	Output Shaft: Carbon Steel	Reduction Ratio	Figure Number	Brake	Approx. Weight (kg)	A	B	C
3-Phase	0.1 kW	G3K32S✱✱✱-WM01T◇◇EN	G3K32N✱✱✱-WM01T◇◇EN	600, 750, 900, 1200	1	No	13.5	367.5	Ø115	-
		G3K32S✱✱✱-WM01T◇◇EV◆	G3K32N✱✱✱-WM01T◇◇EV◆			Yes	15	395	Ø115	-
	0.2 kW	G3K32S✱✱✱-WM02T◇◇EN	G3K32N✱✱✱-WM02T◇◇EN	300, 375, 450	2	No	14	402.5	Ø115	-
		G3K32S✱✱✱-WM02T◇◇EV◆	G3K32N✱✱✱-WM02T◇◇EV◆			Yes	15.5	459	□126	-
	0.4 kW	G3K32S✱✱✱-WM04T◇◇EN	G3K32N✱✱✱-WM04T◇◇EN	100, 120, 160, 200	3	No	15	344.5	□137	-
		G3K32S✱✱✱-WM04T◇◇EV◆	G3K32N✱✱✱-WM04T◇◇EV◆			Yes	16.5	405.5	□137	-
	0.75 kW	G3K32S✱✱✱-WR08T◇◇EN	G3K32N✱✱✱-WR08T◇◇EN	30, 40, 50, 60, 80, 100	4	No	22.5	397	□154	126.5
		G3K32S✱✱✱-WR08T◇◇EV◆	G3K32N✱✱✱-WR08T◇◇EV◆			Yes	25	456	□154	126.5
	1.5 kW	G3K32S✱✱✱-WR15T◇◇EN	G3K32N✱✱✱-WR15T◇◇EN	5, 10, 15, 20, 25	4	No	28.5	433	□178	137.5

Note: A reduction ratio will be indicated as ✱✱✱ in the nomenclature. In addition, a supply voltage/certification code will be indicated as ◇◇, and a brake specification will be indicated as ◆.
Note: There are no gearmotors with motor power of 1.5 kW that have a brake.
Note: Please refer to page 138 for the performance table.
Note: For the dimensions of the output shaft key, refer to page 981.
Note: The carbon steel output shaft is provided with a tap as a standard specification. Please refer to page 1017 for information of the size.

MEMO

3. Gearmotors with Clutch/Brake

3-1. Motor Characteristics Table

G3 Type 3-Phase Standard Voltage

Series	Power	Voltage (V)	Frequency (Hz)	Rated Current (A)	Rated Speed (r/min)
MID	0.1 kW	200/200/220	50/60/60	0.61/0.54/0.54	1410/1690/1710
	0.2 kW IE2	200/200/220	50/60/60	1.1/1.0/1.0	1400/1680/1700
	0.4 kW IE2	200/200/220	50/60/60	2.1/1.8/1.8	1400/1680/1700
	0.75 kW IE3	200/200/220	50/60/60	3.5/3.2/3.1	1450/1740/1750

G3 Type 3-Phase High Voltage (400 V Class)

Series	Power	Voltage (V)	Frequency (Hz)	Rated Current (A)	Rated Speed (r/min)
MID	0.1 kW	380/400/400/440	50/50/60/60	0.31/0.31/0.28/0.28	1400/1410/1690/1720
	0.2 kW IE2	380/400/400/440	50/50/60/60	0.56/0.56/0.5/0.5	1390/1400/1680/1710
	0.4 kW IE2	380/400/400/440	50/50/60/60	1.0/1.0/0.9/0.9	1390/1400/1680/1710
	0.75 kW IE3	380/400/400/440	50/50/60/60	1.73/1.72/1.58/1.54	1440/1450/1740/1750

3-2. Performance Table

[Notes]
- The output shaft speed is the value relative to the synchronous speed of the motor and the reduction ratio.
- ▭ in the performance table indicates that the shaft rotates clockwise when viewed from the output shaft side when the connection is made as shown on page 557 (CW). (Refer to the figure on the right)
- Allowable output shaft O.H.L. is the value at the middle of the output shaft.
- The "*" mark indicates a limited torque type. Please make sure to check the allowable output shaft torque in the performance table.
- Please avoid using gearmotors with clutch/brake in vertical operation (lifting). There is a danger of falling during a power outage.

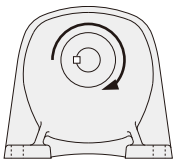

Motor Power	Frame Size	Reduction Ratio	Actual Reduction Ratio	Output Shaft Speed r/min		Allowable Output Shaft Torque N·m		Allowable Output Shaft O.H.L. N	Drawings		
				50 Hz	60 Hz	50 Hz	60 Hz		Foot Mount	Flange Mount	Small Flange Mount
3-Phase 0.1 kW	18	1/5	33/164	300	360	3	2.5	770	P.165	P.167	P.170
		1/10	77/779	150	180	6.1	5	1140			
		1/15	119/1804	100	120	9.1	7.5	1270			
		1/20	49/984	75	90	12	9.8	1530			
		1/25	28/697	60	72	15	12.7	1650			
		1/30	35/1066	50	60	19	14.7	1780			
		1/40	35/1404	37.5	45	24	19.6	1910			
		1/50	7/351	30	36	29	24.5	2040			
	22	1/60	11/684	25	30	35	29.4	2800	P.165	P.168	P.170
		1/80	21/1634	18.8	22.5	47	39.2	3180			
		1/100	7/684	15	18	59	49	3180			
		1/120	147/17974	12.5	15	71	58.8	3180			
		1/160	21/3268	9.4	11.2	94	78.4	3180			
		1/200	21/4085	7.5	9	117	98	3180			
3-Phase 0.2 kW	18	1/5	33/164	300	360	6.1	5	770	P.165	P.167	P.170
		1/10	77/779	150	180	11.8	9.8	1140			
		1/15	119/1804	100	120	18.6	14.7	1270			
		1/20	49/984	75	90	24.5	20.6	1450			
		1/25	28/697	60	72	30.4	25.5	1550			
	22	1/30	7/216	50	60	36.3	30.4	2280	P.165	P.168	P.170
		1/40	91/3600	37.5	45	47	39.2	2410			
		1/50	11/540	30	36	58.8	49	2540			
		1/60	637/39600	25	30	70.6	58.8	2800			
		1/80	91/7200	18.8	22.5	94.1	78.4	3000			
		* 1/100	11/1080	15	18	97	80.4	3180			
	28	1/100	13/1353	15	18	117	98	3690	P.166	P.168	P.171
		1/120	91/11000	12.5	15	140	117	4320			
		1/160	1/165	9.4	11.2	187	156	4450			
		1/200	7/1375	7.5	9	234	195	4450			
3-Phase 0.4 kW	22	1/5	7/34	300	360	12	10	1140	P.165	P.168	P.170
		1/10	7/68	150	180	25	21	1530			
		1/15	49/748	100	120	36	30	1780			
		1/20	7/136	75	90	48	40	1910			
		1/25	7/170	60	72	61	50	2050			
	28	1/30	1/30	50	60	73	61	3310	P.166	P.168	P.171
		1/40	221/8610	37.5	45	94	78	3690			
		1/50	187/9030	30	36	117	98	4080			
		1/60	169/9840	25	30	140	117	4450			
		1/80	65/5166	18.8	22.5	187	156	4450			
		* 1/100	55/5418	15	18	193	161	4450			
	32	1/100	7/688	15	18	234	195	6370	P.166	P.169	P.171
		1/120	77/9360	12.5	15	281	234	7640			
		1/160	21/3328	9.4	11.2	374	313	7640			
		1/200	189/38272	7.5	9	431	390	7640			

Motor Power	Frame Size	Reduction Ratio	Actual Reduction Ratio	Output Shaft Speed		Allowable Output Shaft Torque		Allowable Output Shaft O.H.L.	Drawings		
				r/min		N·m		N	Foot Mount	Flange Mount	Small Flange Mount
				50 Hz	60 Hz	50 Hz	60 Hz				
3-Phase 0.75 kW	28	1/5	91/459	300	360	23	19	1650	P.166	P.168	P.171
		1/10	1/10	150	180	45	38	2280			
		1/15	91/1360	100	120	68	57	2800			
		1/20	5/102	75	90	91	75	3050			
		1/25	7/170	60	72	114	94	3180			
	32	1/30	3/92	50	60	136	114	5220	P.166	P.169	P.171
		1/40	13/516	37.5	45	175	146	5470			
		1/50	11/540	30	36	220	183	5780			
		1/60	13/774	25	30	264	220	6080			
		1/80	13/1032	18.8	22.5	351	293	6180			
		* 1/100	11/1080	15	18	362	302	6770			
	40	1/100	91/9000	15	18	439	366	9170	P.167	P.169	-
		1/120	77/9400	12.5	15	527	439	9170			
		1/160	9/1400	9.4	11.2	703	585	9170			
		1/200	9/1750	7.5	9	764	732	9170			

Note 1: Please be sure to read the notes on page 163.

3-3. Drawings

G3 Type Parallel Shaft | Shaft Diameter **18** | **Foot** Mounting

<Figure 1>

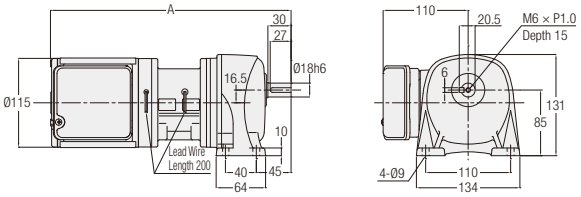

Number of Phases	Power	Part Number	Reduction Ratio	Figure Number	Approx. Weight (kg)	A
3-Phase	0.1 kW	G3L18N✱✱✱-EM01T◇JTN	5, 10, 15, 20, 25, 30, 40, 50	1	7	311.5
	0.2 kW	G3L18N✱✱✱-EM02T◇JTN	5, 10, 15, 20, 25	1	9	326.5

Note: A reduction ratio will be indicated as ✱✱✱ in the nomenclature. In addition, a supply voltage code will be indicated as ◇.
Note: Please refer to page 163 for the performance table.

G3 Type Parallel Shaft | Shaft Diameter **22** | **Foot** Mounting

<Figure 2>

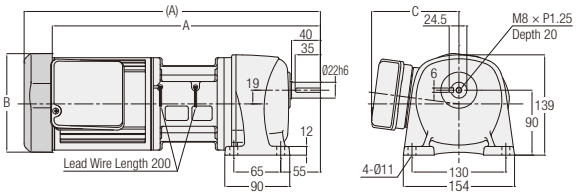

Note: The value in parentheses is the value of a gearmotor with a motor power of 0.4 kW.

Number of Phases	Power	Part Number	Reduction Ratio	Figure Number	Approx. Weight (kg)	A	B	C
3-Phase	0.1 kW	G3L22N✱✱✱-EM01T◇JTN	60, 80, 100, 120, 160, 200	2	8.5	337.5	Ø115	110
	0.2 kW	G3L22N✱✱✱-EM02T◇JTN	30, 40, 50, 60, 80, 100	2	10	352.5	Ø115	110
	0.4 kW	G3L22N✱✱✱-EM04T◇JTN	5, 10, 15, 20, 25	2	12.5	410.5	□137	121

Note: A reduction ratio will be indicated as ✱✱✱ in the nomenclature. In addition, a supply voltage code will be indicated as ◇.
Note: Please refer to page 163 for the performance table.

G3 Type Parallel Shaft | Shaft Diameter 28 | Foot Mounting

<Figure 1>

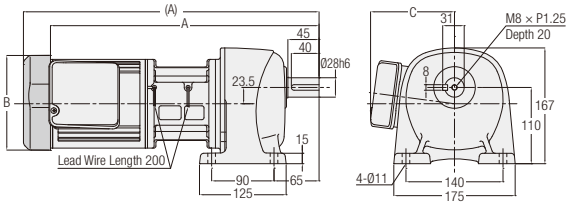

<Figure 2>

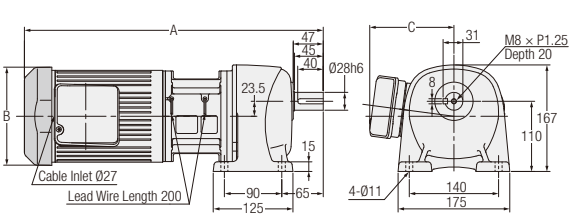

Note: The value in parentheses is the value of a gearmotor with a motor power of 0.4 kW.

Number of Phases	Power	Part Number	Reduction Ratio	Figure Number	Approx. Weight (kg)	A	B	C
3-Phase	0.2 kW	G3L28N✱✱✱-EM02T◇JTN	100, 120, 160, 200	1	12	365.5	Ø115	110
	0.4 kW	G3L28N✱✱✱-EM04T◇JTN	30, 40, 50, 60, 80, 100	1	14.5	426.5	□137	121
	0.75 kW	G3L28N✱✱✱-ER08T◇JTN	5, 10, 15, 20, 25	2	22	468.5	□154	132

Note: A reduction ratio will be indicated as ✱✱✱ in the nomenclature. In addition, a supply voltage code will be indicated as ◇.
Note: Please refer to page 163 for the performance table.

G3 Type Parallel Shaft | Shaft Diameter 32 | Foot Mounting

<Figure 3>

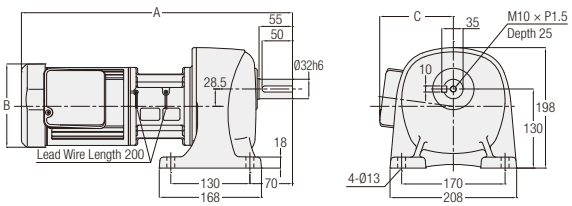

<Figure 4>

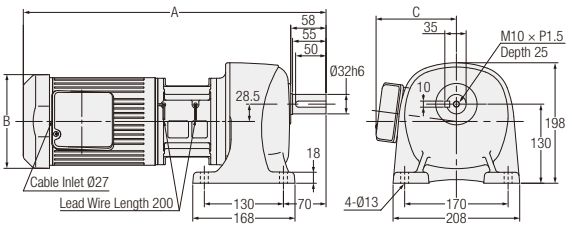

Number of Phases	Power	Part Number	Reduction Ratio	Figure Number	Approx. Weight (kg)	A	B	C
3-Phase	0.4 kW	G3L32N✱✱✱-EM04T◇JTN	100, 120, 160, 200	3	17.5	445.5	□138	121
	0.75 kW	G3L32N✱✱✱-ER08T◇JTN	30, 40, 50, 60, 80, 100	4	25.5	497.5	□154	132

Note: A reduction ratio will be indicated as ✱✱✱ in the nomenclature. In addition, a supply voltage code will be indicated as ◇.
Note: Please refer to page 163 for the performance table.

G3 Type Parallel Shaft | Shaft Diameter 40 | Foot Mounting

<Figure 1>

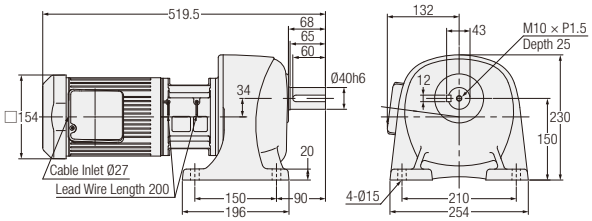

Number of Phases	Power	Part Number	Reduction Ratio	Figure Number	Approx. Weight (kg)
3-Phase	0.75 kW	G3L40N✻✻✻-ER08T◇JTN	100, 120, 160, 200	1	32

Note: A reduction ratio will be indicated as ✻✻✻ in the nomenclature. In addition, a supply voltage code will be indicated as ◇.
Note: Please refer to page 164 for the performance table.

G3 Type Parallel Shaft | Shaft Diameter 18 | Flange Mounting

<Figure 2>

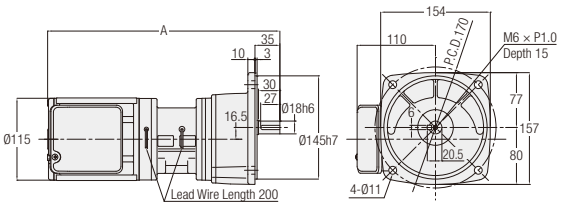

Number of Phases	Power	Part Number	Reduction Ratio	Figure Number	Approx. Weight (kg)	A
3-Phase	0.1 kW	G3F18N✻✻✻-EM01T◇JTN	5, 10, 15, 20, 25, 30, 40, 50	2	7.5	311.5
	0.2 kW	G3F18N✻✻✻-EM02T◇JTN	5, 10, 15, 20, 25	2	9.5	326.5

Note: A reduction ratio will be indicated as ✻✻✻ in the nomenclature. In addition, a supply voltage code will be indicated as ◇.
Note: Please refer to page 163 for the performance table.

G3 Type Parallel Shaft | Shaft Diameter 22 | Flange Mounting

<Figure 1>

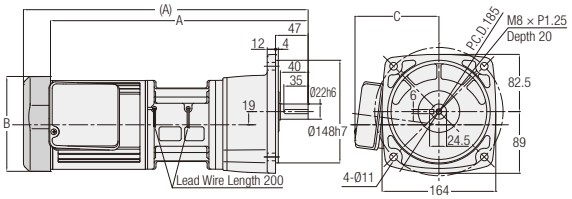

Note: The value in parentheses is the value of a gearmotor with a motor power of 0.4 kW.

Number of Phases	Power	Part Number	Reduction Ratio	Figure Number	Approx. Weight (kg)	A	B	C
3-Phase	0.1 kW	G3F22N✱✱✱-EM01T◇JTN	60, 80, 100, 120, 160, 200	1	9	337.5	Ø115	110
	0.2 kW	G3F22N✱✱✱-EM02T◇JTN	30, 40, 50, 60, 80, 100	1	10.5	352.5	Ø115	110
	0.4 kW	G3F22N✱✱✱-EM04T◇JTN	5, 10, 15, 20, 25	1	13	410.5	□137	121

Note: A reduction ratio will be indicated as ✱✱✱ in the nomenclature. In addition, a supply voltage code will be indicated as ◇.
Note: Please refer to page 163 for the performance table.

G3 Type Parallel Shaft | Shaft Diameter 28 | Flange Mounting

<Figure 2>

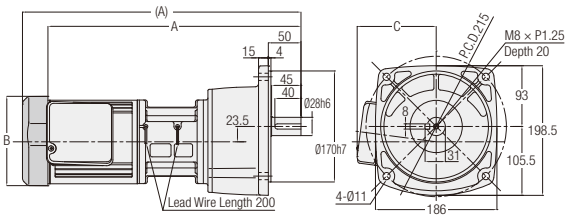

<Figure 3>

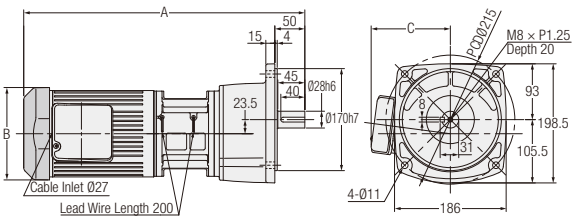

Note: The value in parentheses is the value of a gearmotor with a motor power of 0.4 kW

Number of Phases	Power	Part Number	Reduction Ratio	Figure Number	Approx. Weight (kg)	A	B	C
3-Phase	0.2 kW	G3F28N✱✱✱-EM02T◇JTN	100, 120, 160, 200	2	12.5	365.5	Ø115	110
	0.4 kW	G3F28N✱✱✱-EM04T◇JTN	30, 40, 50, 60, 80, 100	2	15	426.5	□137	121
	0.75 kW	G3F28N✱✱✱-ER08T◇JTN	5, 10, 15, 20, 25	3	22.5	468.5	□154	132

Note: A reduction ratio will be indicated as ✱✱✱ in the nomenclature. In addition, a supply voltage code will be indicated as ◇.
Note: Please refer to page 163 for the performance table.

G3 Type Parallel Shaft | Shaft Diameter 32 | Flange Mounting

<Figure 1>

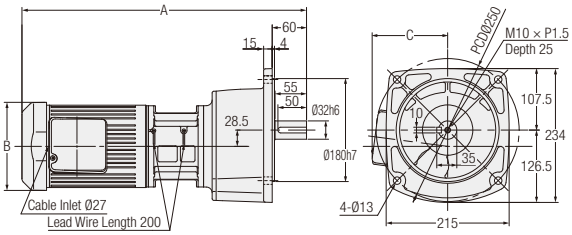

Number of Phases	Power	Part Number	Reduction Ratio	Figure Number	Approx. Weight (kg)	A	B	C
3-Phase	0.4 kW	G3F32N✱✱✱-EM04T◇JTN	100, 120, 160, 200	1	18	445.5	□137	121
	0.75 kW	G3F32N✱✱✱-ER08T◇JTN	30, 40, 50, 60, 80, 100	1	26	497.5	□154	132

Note: A reduction ratio will be indicated as ✱✱✱ in the nomenclature. In addition, a supply voltage code will be indicated as ◇.
Note: Please refer to page 163 for the performance table.

G3 Type Parallel Shaft | Shaft Diameter 40 | Flange Mounting

<Figure 2>

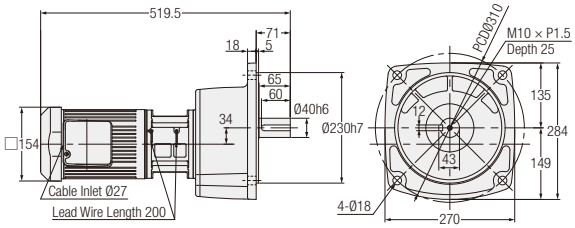

Number of Phases	Power	Part Number	Reduction Ratio	Figure Number	Approx. Weight (kg)
3-Phase	0.75 kW	G3F40N✱✱✱-ER08T◇JTN	100, 120, 160, 200	2	26

Note: A reduction ratio will be indicated as ✱✱✱ in the nomenclature. In addition, a supply voltage code will be indicated as ◇.
Note: Please refer to page 164 for the performance table.

G3 Type Parallel Shaft | Shaft Diameter 18 | Small Flange Mounting

<Figure 1>

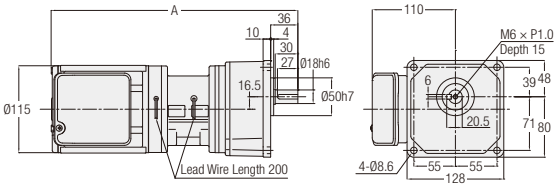

Number of Phases	Power	Part Number	Reduction Ratio	Figure Number	Approx. Weight (kg)	A
3-Phase	0.1 kW	G3K18N✱✱✱-EM01T◇JTN	5, 10, 15, 20, 25, 30, 40, 50	1	7.5	311.5
	0.2 kW	G3K18N✱✱✱-EM02T◇JTN	5, 10, 15, 20, 25	1	9.5	326.5

Note: A reduction ratio will be indicated as ✱✱✱ in the nomenclature. In addition, a supply voltage code will be indicated as ◇.
Note: Please refer to page 163 for the performance table.

G3 Type Parallel Shaft | Shaft Diameter 22 | Small Flange Mounting

<Figure 2>

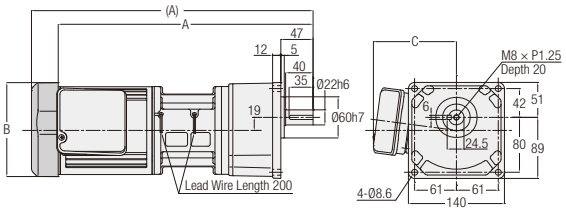

Note: The value in parentheses is the value of a gearmotor with a motor power of 0.4 kW.

Number of Phases	Power	Part Number	Reduction Ratio	Figure Number	Approx. Weight (kg)	A	B	C
3-Phase	0.1 kW	G3K22N✱✱✱-EM01T◇JTN	60, 80, 100, 120, 160, 200	2	9	337.5	Ø115	110
	0.2 kW	G3K22N✱✱✱-EM02T◇JTN	30, 40, 50, 60, 80, 100	2	10.5	352.5	Ø115	110
	0.4 kW	G3K22N✱✱✱-EM04T◇JTN	5, 10, 15, 20, 25	2	13	410.5	□137	121

Note: A reduction ratio will be indicated as ✱✱✱ in the nomenclature. In addition, a supply voltage code will be indicated as ◇.
Note: Please refer to page 163 for the performance table.

G3 Type Parallel Shaft | Shaft Diameter 28 | Small Flange Mounting

<Figure 1>

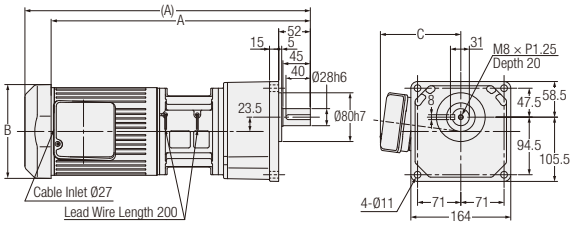

Note: The value in parentheses is the value of a gearmotor with a motor power of 0.4 kW or 0.75 kW.

Number of Phases	Power	Part Number	Reduction Ratio	Figure Number	Approx. Weight (kg)	A	B	C
3-Phase	0.2 kW	G3K28N✱✱✱-EM02T◇JTN	100, 120, 160, 200	1	12.5	365.5	Ø115	110
	0.4 kW	G3K28N✱✱✱-EM04T◇JTN	30, 40, 50, 60, 80, 100	1	15	426.5	□137	121
	0.75 kW	G3K28N✱✱✱-ER08T◇JTN	5, 10, 15, 20, 25	1	22.5	468.5	□154	132

Note: A reduction ratio will be indicated as ✱✱✱ in the nomenclature. In addition, a supply voltage code will be indicated as ◇.
Note: Please refer to page 163 for the performance table.

G3 Type Parallel Shaft | Shaft Diameter 32 | Small Flange Mounting

<Figure 2>

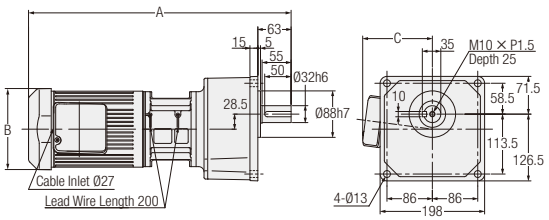

Number of Phases	Power	Part Number	Reduction Ratio	Figure Number	Approx. Weight (kg)	A	B	C
3-Phase	0.4 kW	G3K32N✱✱✱-EM04T◇JTN	100, 120, 160, 200	2	18	445.5	□137	121
	0.75 kW	G3K32N✱✱✱-ER08T◇JTN	30, 40, 50, 60, 80, 100	2	26	497.5	□154	132

Note: A reduction ratio will be indicated as ✱✱✱ in the nomenclature. In addition, a supply voltage code will be indicated as ◇.
Note: Please refer to page 163 for the performance table.

4. Speed Control Gearmotors

4-1. Properties and Motor Characteristics Table

Properties

This gearmotor has a motor provided with a rate generator (AC generator) for speed detection and can control the speed freely in a wide range of 50 to 1400 r/min (50 Hz) or 50 to 1700 r/min (60 Hz) by means of a dedicated speed controller.

■ Properties

❶ Wide variable speed range
Our original circuit design enables the induction gearmotor to operate continuously from a low speed range of 50 r/min.

Power Source Frequency	Variable speed range
50 Hz	50 to 1400 r/min
60 Hz	50 to 1700 r/min

❷ Outstanding output characteristic
The induction motor ensures a high allowable load torque value in the low speed range and has a wide high-speed range characteristic as shown in the right figure.

❸ Wide variety of types
Induction gearmotors are available in eight main types according to applications: two U types (100 V, 200 V) connectable by means of a lead wire with a connector and six plug-in P types (100 V, 200 V).
Note: Please refer to page 631 for detailed specifications.

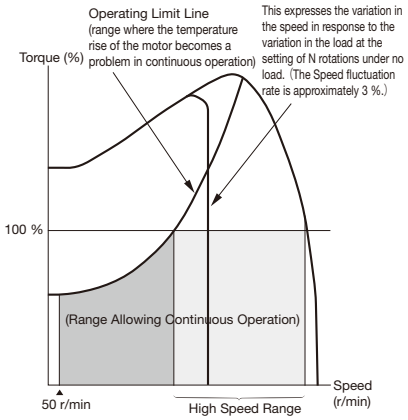

Note: The same speed can be obtained from a speed control gearmotor, regardless of the power supply frequency. For example, a speed set in the 50 Hz region remains unchanged also in the 60 Hz region, and the same speed can be obtained. (However, the maximum speed is within the range of 1400 r/min.)

Motor Characteristics Table

G Type 1-Phase (Speed Control Gearmotors)

Series	Power (W)	Voltage (V)	Frequency (Hz)	Frame Size	Max Current (A)	High Speed Range (r/min)	Capacitor (μF)
MINI	15 W	100/100	50/60	12	0.6/0.6	500 to 1350/550 to 1650	6
				22	0.6/0.6	500 to 1350/550 to 1650	6
		200/200	50/60	12	0.3/0.3	600 to 1400/750 to 1700	1.5
				22	0.3/0.3	600 to 1400/750 to 1700	1.5
	25 W	100/100	50/60	12	0.6/0.6	750 to 1350/1000 to 1650	8
				15	0.7/0.7	550 to 1400/650 to 1650	8
				22	0.6/0.6	750 to 1350/1000 to 1650	8
				28	0.7/0.7	550 to 1400/650 to 1650	8
		200/200	50/60	12	0.4/0.4	850 to 1350/1000 to 1650	2
				15	0.4/0.4	600 to 1350/800 to 1650	2
				22	0.4/0.4	850 to 1350/1000 to 1650	2
				28	0.4/0.4	600 to 1350/800 to 1650	2
	40 W	100/100	50/60	15	0.9/0.9	800 to 1350/1050 to 1650	12
				18	1.1/0.9	850 to 1400/1200 to 1700	12
				28	0.9/0.9	800 to 1350/1050 to 1650	12
				32	0.9/0.9	800 to 1350/1050 to 1650	12
		200/200	50/60	15	0.5/0.5	900 to 1350/1300 to 1650	3
				18	0.6/0.6	850 to 1400/1100 to 1700	3
				28	0.5/0.5	900 to 1350/1300 to 1650	3
				32	0.5/0.5	900 to 1350/1300 to 1650	3
	60 W	100/100	50/60	15	1.0/1.7	700 to 1350/800 to 1650	20
				18	1.3/1.3	500 to 1400/650 to 1650	20
				28	1.0/1.7	700 to 1350/800 to 1650	20
				32	1.0/1.7	700 to 1350/800 to 1650	20
		200/200	50/60	15	0.8/0.9	700 to 1350/800 to 1650	5
				18	0.8/0.9	750 to 1400/850 to 1650	5
				28	0.8/0.9	700 to 1350/800 to 1650	5
				32	0.8/0.9	700 to 1350/800 to 1650	5
	90 W	100/100	50/60	15	1.4/2.0	950 to 1300/1150 to 1600	26
				18	1.4/2.0	950 to 1350/1100 to 1650	26
				28	1.4/2.0	950 to 1300/1150 to 1600	26
				32	1.4/2.0	950 to 1300/1150 to 1600	26
				40	1.4/2.0	950 to 1350/1100 to 1650	26
		200/200	50/60	15	0.9/1.0	1000 to 1350/1150 to 1600	6.5
				18	1.0/1.1	900 to 1350/1100 to 1650	6.5
				28	0.9/1.0	1000 to 1350/1150 to 1600	6.5
				32	0.9/1.0	1000 to 1350/1150 to 1600	6.5
				40	1.0/1.1	900 to 1350/1100 to 1650	6.5

4-2. Graph for Speed Characteristics

Torque-Speed Characteristic Graph

<1-Phase15 W>

■ 100 V

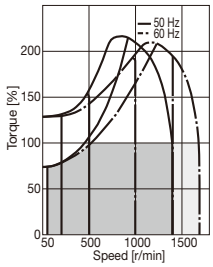

■ 200 V

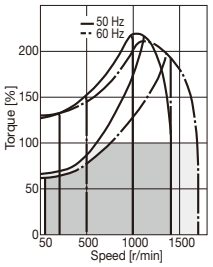

<1-Phase 25 W>

■ Frame Size 12, 22/100 V

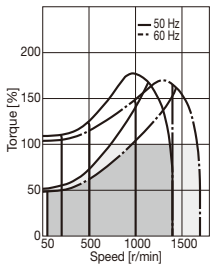

■ Frame Size 12, 22/200 V

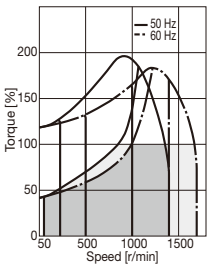

■ Frame Size 15, 28/100 V

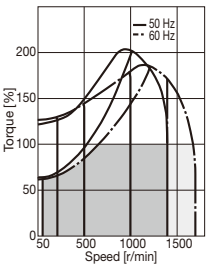

■ Frame Size 15, 28/200 V

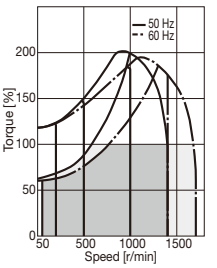

<1-Phase 40 W>

■ Frame Size 15, 28, 32/100 V

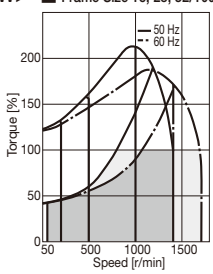

■ Frame Size 15, 28, 32/200 V

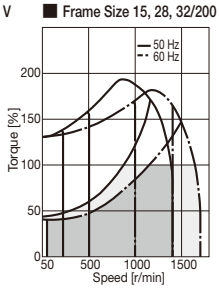

■ Frame Size 18/100 V

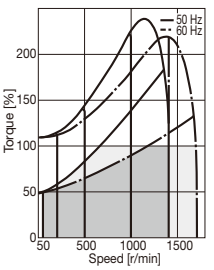

■ Frame Size 18/200 V

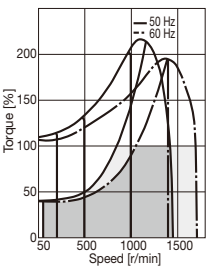

<1-Phase 60 W>

■ Frame Size 15, 28, 32/100 V

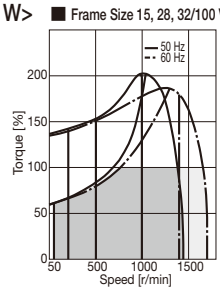

■ Frame Size 15, 28, 32/200 V

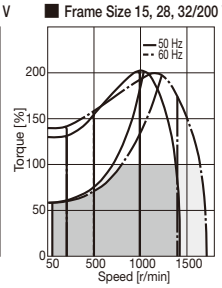

■ Frame Size 18/100 V

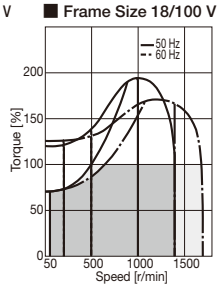

■ Frame Size 18/200 V

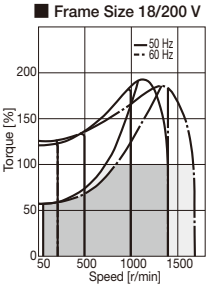

<1-Phase 90 W>

■ Frame Size 15, 28, 32/100 V

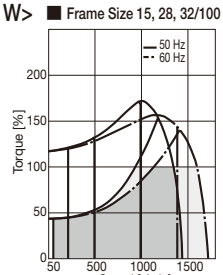

■ Frame Size 15, 28, 32/200 V

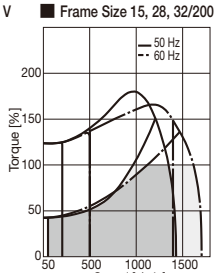

■ Frame Size 18, 40/100 V

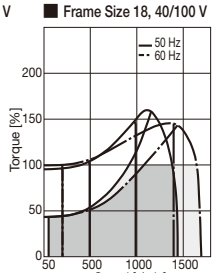

■ Frame Size 18, 40/200 V

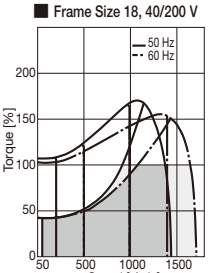

Note: 100 % torque represents the allowable output shaft torque at high speed.

4-3. Performance Table

[Notes]
- The output shaft speed is the value relative to the synchronous speed of the motor and the reduction ratio.
- The allowable output shaft torque at high speed represents the allowable output shaft torque in the high speed range (r/min).
- The value (%) of the allowable output shaft torque at 50 r/min represents the ratio to the allowable output shaft torque at high speed.
- Allowable output shaft O.H.L. is the value at the middle of the output shaft.
- The "*" mark indicates a limited torque type. Please make sure to check the allowable output shaft torque in the performance table.
- ▭ in the performance table indicates that the shaft rotates clockwise when viewed from the output shaft side when the connection is made as shown on page 546 (CW). (Refer to the figure on the right)

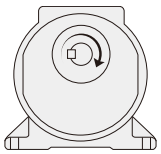

Series	Motor Power	Frame Size	Reduction Ratio	Actual Reduction Ratio	Output Shaft Speed r/min		Allowable Output Shaft O.H.L.	Allowable Output Shaft Torque		Drawings		
					50 Hz	60 Hz	N	At High Speed N·m	At 50 r/min (%)	Foot Mount	Flange Mount	Small Flange Mount
MINI	1-Phase 15 W	12	1/5	1/5	300	360	98	0.29	70 (100 V) 60 (200 V)	P.177	P.182	-
			1/7.5	1/7.5	200	240	196	0.49				
			1/10	1/10	150	180	245	0.69				
			1/15	1/15	100	120	343	0.98				
			1/20	1/20	75	90	441	1.27				
			1/25	1/25	60	72	490	1.67				
			1/30	1/29	50	60	539	1.96				
			1/40	1/40	37.5	45	588	2.65				
			1/50	1/50	30	36	637	3.33				
			1/60	1/58	25	30	686	3.92				
			1/80	1/80	18.8	22.5	735	5.00				
			1/100	1/100	15	18	735	6.27				
			1/120	1/120	12.5	15	784	7.45				
			1/160	1/160	9.4	11.2	784	9.80				
			1/200	1/200	7.5	9	784	12.7				
			1/240	1/232	6.3	7.5	784	14.7				
		22	1/300	91/27000	5	6	1760	16.7	70 (100 V) 60 (200 V)	P.180	P.183	P.185
			1/375	11/4050	4	4.8	1760	20.6				
			1/450	637/297000	3.3	4	1760	25.5				
			1/600	91/54000	2.5	3	1760	33.3				
			1/750	11/8100	2	2.4	1760	42.1				
			1/900	637/594000	1.7	2	1760	50				
			1/1200	91/10440	1.3	1.5	1760	66.6				
			1/1500	11/15660	1	1.2	1760	83.3				
			1/1800	637/1148400	0.8	1	1760	98				
	1-Phase 25 W	12	1/5	1/5	300	360	98	0.59	50 (100 V) 45 (200 V)	P.177	P.182	-
			1/7.5	1/7.5	200	240	196	0.78				
			1/10	1/10	150	180	245	1.08				
			1/15	1/15	100	120	343	1.67				
			1/20	1/20	75	90	441	2.25				
			1/25	1/25	60	72	490	2.74				
			1/30	1/29	50	60	539	3.33				
			1/40	1/40	37.5	45	588	4.41				
			1/50	1/50	30	36	637	5.49				
			1/60	1/58	25	30	686	6.66				
			1/80	1/80	18.8	22.5	735	8.43				
			1/100	1/100	15	18	735	10.8				
			1/120	1/120	12.5	15	784	12.7				
		15	1/160	1/160	9.4	11.2	1080	16.7	60 (100 V) (200 V)	P.178	P.182	-
			1/200	1/200	7.5	9	1080	20.6				
			1/240	1/232	6.3	7.5	1080	25.5				
		22	1/300	91/27000	5	6	1760	28.4	50 (100 V) 45 (200 V)	P.180	P.183	P.185
			1/375	11/4050	4	4.8	1760	35.3				
			1/450	637/297000	3.3	4	1760	42.1				
			1/600	91/54000	2.5	3	1760	55.9				
			1/750	11/8100	2	2.4	1760	69.6				
			1/900	637/594000	1.7	2	1760	84.3				
		28	1/1200	221/249690	1.3	1.5	2740	108	60 (100 V) (200 V)	P.180	P.184	P.186
			1/1500	187/261870	1	1.2	2740	137				
			1/1800	169/285360	0.8	1	2740	167				

Series	Motor Power	Frame Size	Reduction Ratio	Actual Reduction Ratio	Output Shaft Speed r/min		Allowable Output Shaft O.H.L.	Allowable Output Shaft Torque		Drawings		
								At High Speed	At 50 r/min (%)	Foot Mount	Flange Mount	Small Flange Mount
					50 Hz	60 Hz	N	N·m				
MINI	1-Phase 40 W	15	1/5	1/5	300	360	98	0.88	40 (100 V) (200 V)	P.178	P.182	-
			1/7.5	1/7.5	200	240	196	1.37				
			1/10	1/10	150	180	245	1.76				
			1/15	1/15	100	120	343	2.65				
			1/20	1/20	75	90	441	3.53				
			1/25	1/25	60	72	490	4.41				
			1/30	1/29	50	60	539	5.29				
			1/40	1/40	37.5	45	784	7.06				
			1/50	1/50	30	36	882	8.82				
			1/60	1/58	25	30	882	10.8				
			1/80	1/80	18.8	22.5	980	13.7				
			1/100	1/100	15	18	980	16.7				
			1/120	1/120	12.5	15	1080	20.6				
		18	1/160	1/160	9.4	11.2	1370	26.5	50 (100 V) 40 (200 V)	P.179	P.183	-
			1/200	1/200	7.5	9	1370	33.3				
			1/240	1/240	6.3	7.5	1370	40.2				
		28	1/300	91/27000	5	6	2740	45.1	40 (100 V) (200 V)	P.180	P.184	P.186
			1/375	11/4050	4	4.8	2740	55.9				
			1/450	637/297000	3.3	4	2740	67.6				
			1/600	221/129150	2.5	3	2740	90.2				
			1/750	187/135450	2	2.4	2740	118				
			1/900	169/147600	1.7	2	2740	137				
		32	1/1200	13/14964	1.3	1.5	5100	176	40 (100 V) (200 V)	P.181	P.184	P.186
			1/1500	11/15660	1	1.2	5100	225				
			1/1800	13/22446	0.8	1	5100	274				
	1-Phase 60 W	15	1/5	1/5	300	360	98	1.37	60 (100 V) 55 (200 V)	P.178	P.182	-
			1/7.5	1/7.5	200	240	196	2.06				
			1/10	1/10	150	180	245	2.74				
			1/15	1/15	100	120	343	4.12				
			1/20	1/20	75	90	441	5.49				
			1/25	1/25	60	72	490	6.96				
			1/30	1/29	50	60	539	8.33				
			1/40	1/40	37.5	45	784	10.8				
			1/50	1/50	30	36	882	13.7				
			1/60	1/58	25	30	882	16.7				
		18	1/80	1/80	18.8	22.5	1270	20.6	70 (100 V) 55 (200 V)	P.179	P.183	-
			1/100	1/100	15	18	1270	26.5				
			1/120	1/120	12.5	15	1370	31.4				
			1/160	1/160	9.4	11.2	1370	42.1				
			1/200	1/200	7.5	9	1370	52.9				
			* 1/240	1/240	6.3	7.5	1370	53.9				
		28	1/300	91/27000	5	6	2740	70.6	60 (100 V) 55 (200 V)	P.180	P.184	P.186
			1/375	11/4050	4	4.8	2740	88.2				
			1/450	637/297000	3.3	4	2740	108				
			1/600	221/129150	2.5	3	2740	137				
			1/750	187/135450	2	2.4	2740	176				
			1/900	169/147600	1.7	2	2740	216				
		32	1/1200	13/14964	1.3	1.5	5100	284	60 (100 V) 55 (200 V)	P.181	P.184	P.186
			1/1500	11/15660	1	1.2	5100	353				
			1/1800	13/22446	0.8	1	5100	421				

Series	Motor Power	Frame Size	Reduction Ratio	Actual Reduction Ratio	Output Shaft Speed r/min		Allowable Output Shaft O.H.L.	Allowable Output Shaft Torque		Drawings		
					50 Hz	60 Hz	N	At High Speed N·m	At 50 r/min (%)	Foot Mount	Flange Mount	Small Flange Mount
MINI	1-Phase 90 W	15	1/5	1/5	300	360	147	2.06	40 (100 V) (200 V)	P.178	P.182	-
			1/7.5	1/7.5	200	240	245	3.14				
			1/10	1/10	150	180	343	4.12				
			1/15	1/15	100	120	441	6.17				
			1/20	1/20	75	90	539	8.33				
			1/25	1/25	60	72	588	10.8				
			1/30	1/29	50	60	686	12.7				
		18	1/40	1/40	37.5	45	1080	16.7	40 (100 V) (200 V)	P.179	P.183	-
			1/50	1/50	30	36	1180	20.6				
			1/60	1/60	25	30	1180	24.5				
			1/80	1/80	18.8	22.5	1270	31.4				
			1/100	1/100	15	18	1270	39.2				
			1/120	1/120	12.5	15	1370	47.0				
			* 1/160	1/160	9.4	11.2	1370	53.9				
			* 1/200	1/200	7.5	9	1370	53.9				
			* 1/240	1/240	6.3	7.5	1370	53.9				
		28	1/300	221/64575	5	6	2740	108	40 (100 V) (200 V)	P.180	P.184	P.186
			1/375	187/67725	4	4.8	2740	137				
			1/450	169/73800	3.3	4	2740	157				
		32	1/600	13/7740	2.5	3	5100	216	40 (100 V) (200 V)	P.181	P.184	P.186
			1/750	11/8100	2	2.4	5100	265				
			1/900	13/11610	1.7	2	5100	314				
		40	1/1200	13/14964	1.3	1.5	7060	421	40 (100 V) (200 V)	P.181	P.185	-
			1/1500	11/15660	1	1.2	7060	529				
			1/1800	13/22443	0.8	1	7060	637				

Note 1: Please be sure to read the notes on page 174.

4-4. Drawings

G Type Parallel Shaft | Shaft Diameter **12** | **Foot** Mounting

<Figure 1>

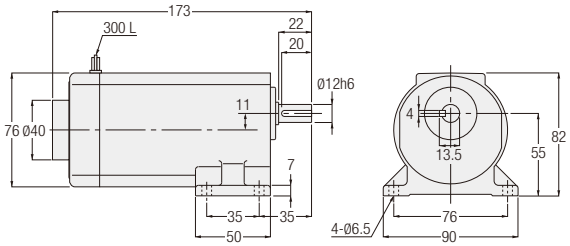

Number of Phases	Power	Part Number	Reduction Ratio	Figure Number	Controller	Approx. Weight (kg)
1-Phase	15 W	GLU-12-***-S15	5, 7.5, 10, 15, 20, 25, 30, 40, 50, 60, 80, 100, 120, 160, 200, 240	1	Set	2
		GLU-12-***-S15W				
		GLP-12-***-S15	5, 7.5, 10, 15, 20, 25, 30, 40, 50, 60, 80, 100, 120, 160, 200, 240	1	Sold Separately	2
		GLP-12-***-S15W				
	25 W	GLU-12-***-S25	5, 7.5, 10, 15, 20, 25, 30, 40, 50, 60, 80, 100, 120	1	Set	2
		GLU-12-***-S25W				
		GLP-12-***-S25	5, 7.5, 10, 15, 20, 25, 30, 40, 50, 60, 80, 100, 120	1	Sold Separately	2
		GLP-12-***-S25W				

Note: A reduction ratio will be indicated as *** in the nomenclature.
Note: Please refer to page 174 for the performance table.

G Type Parallel Shaft | Shaft Diameter 15 | Foot Mounting

<Figure 1>

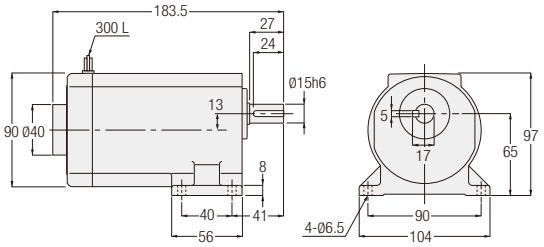

<Figure 2>

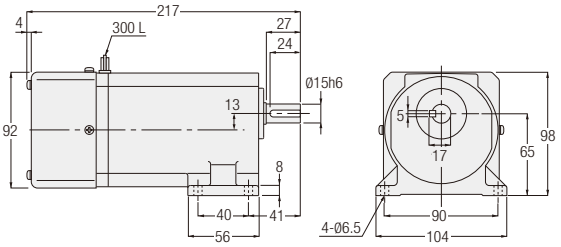

Number of Phases	Power	Part Number	Reduction Ratio	Figure Number	Controller	Approx. Weight (kg)
1-Phase	25 W	GLU-15-✱✱✱-S25	160, 200, 240	1	Set	3
		GLU-15-✱✱✱-S25W				
		GLP-15-✱✱✱-S25	160, 200, 240	1	Sold Separately	3
		GLP-15-✱✱✱-S25W				
	40 W	GLU-15-✱✱✱-S40	5, 7.5, 10, 15, 20, 25, 30, 40, 50, 60, 80, 100, 120	1	Set	3
		GLU-15-✱✱✱-S40W				
		GLP-15-✱✱✱-S40	5, 7.5, 10, 15, 20, 25, 30, 40, 50, 60, 80, 100, 120	1	Sold Separately	3
		GLP-15-✱✱✱-S40W				
	60 W	GLU-15-✱✱✱-S60	5, 7.5, 10, 15, 20, 25, 30, 40, 50, 60	2	Set	3
		GLU-15-✱✱✱-S60W				
		GLP-15-✱✱✱-S60	5, 7.5, 10, 15, 20, 25, 30, 40, 50, 60	2	Sold Separately	3
		GLP-15-✱✱✱-S60W				
	90 W	GLU-15-✱✱✱-S90	5, 7.5, 10, 15, 20, 25, 30	2	Set	3
		GLU-15-✱✱✱-S90W				
		GLP-15-✱✱✱-S90	5, 7.5, 10, 15, 20, 25, 30	2	Sold Separately	3
		GLP-15-✱✱✱-S90W				

Note: A reduction ratio will be indicated as ✱✱✱ in the nomenclature.
Note: Please refer to page 174 for the performance table.

G Type Parallel Shaft | Shaft Diameter **18** | **Foot** Mounting

<Figure 1>

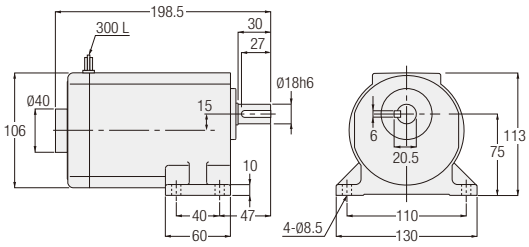

<Figure 2>

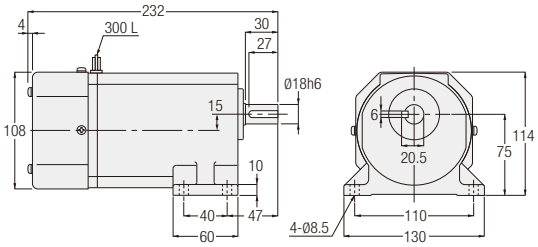

Number of Phases	Power	Part Number	Reduction Ratio	Figure Number	Controller	Approx. Weight (kg)
1-Phase	40 W	GLU-18-✱✱✱-S40	160, 200, 240	1	Set	4
		GLU-18-✱✱✱-S40W				
		GLP-18-✱✱✱-S40	160, 200, 240	1	Sold Separately	4
		GLP-18-✱✱✱-S40W				
	60 W	GLU-18-✱✱✱-S60	80, 100, 120, 160, 200, 240	2	Set	4
		GLU-18-✱✱✱-S60W				
		GLP-18-✱✱✱-S60	80, 100, 120, 160, 200, 240	2	Sold Separately	4
		GLP-18-✱✱✱-S60W				
	90 W	GLU-18-✱✱✱-S90	40, 50, 60, 80, 100, 120, 160, 200, 240	2	Set	4
		GLU-18-✱✱✱-S90W				
		GLP-18-✱✱✱-S90	40, 50, 60, 80, 100, 120, 160, 200, 240	2	Sold Separately	4
		GLP-18-✱✱✱-S90W				

Note: A reduction ratio will be indicated as ✱✱✱ in the nomenclature.
Note: Please refer to page 175 for the performance table.

G Type Parallel Shaft | Shaft Diameter 22 | Foot Mounting

<Figure 1>

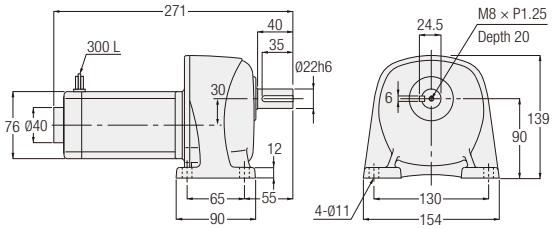

Number of Phases	Power	Part Number	Reduction Ratio	Figure Number	Controller	Approx. Weight (kg)
1-Phase	15 W	GLU-22-✱✱✱-S15	300, 375, 450, 600, 750, 900, 1200, 1500, 1800	1	Set	5
		GLU-22-✱✱✱-S15W				
		GLP-22-✱✱✱-S15	300, 375, 450, 600, 750, 900, 1200, 1500, 1800	1	Sold Separately	5
		GLP-22-✱✱✱-S15W				
	25 W	GLU-22-✱✱✱-S25	300, 375, 450, 600, 750, 900	1	Set	5
		GLU-22-✱✱✱-S25W				
		GLP-22-✱✱✱-S25	300, 375, 450, 600, 750, 900	1	Sold Separately	5
		GLP-22-✱✱✱-S25W				

Note: A reduction ratio will be indicated as ✱✱✱ in the nomenclature.
Note: Please refer to page 174 for the performance table.

G Type Parallel Shaft | Shaft Diameter 28 | Foot Mounting

<Figure 2>

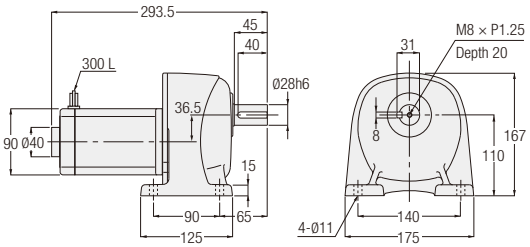

<Figure 3>

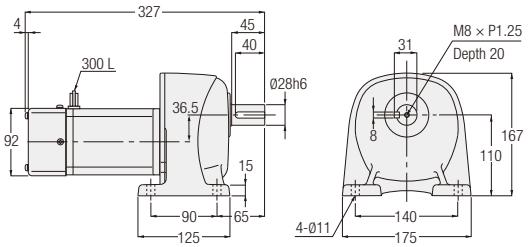

Number of Phases	Power	Part Number	Reduction Ratio	Figure Number	Controller	Approx. Weight (kg)
1-Phase	25 W	GLU-28-✱✱✱-S25	1200, 1500, 1800	2	Set	7
		GLU-28-✱✱✱-S25W				
		GLP-28-✱✱✱-S25	1200, 1500, 1800	2	Sold Separately	7
		GLP-28-✱✱✱-S25W				
	40 W	GLU-28-✱✱✱-S40	300, 375, 450, 600, 750, 900	2	Set	7
		GLU-28-✱✱✱-S40W				
		GLP-28-✱✱✱-S40	300, 375, 450, 600, 750, 900	2	Sold Separately	7
		GLP-28-✱✱✱-S40W				
	60 W	GLU-28-✱✱✱-S60	300, 375, 450, 600, 750, 900	3	Set	7
		GLU-28-✱✱✱-S60W				
		GLP-28-✱✱✱-S60	300, 375, 450, 600, 750, 900	3	Sold Separately	7
		GLP-28-✱✱✱-S60W				
	90 W	GLU-28-✱✱✱-S90	300, 375, 450	3	Set	7
		GLU-28-✱✱✱-S90W				
		GLP-28-✱✱✱-S90	300, 375, 450	3	Sold Separately	7
		GLP-28-✱✱✱-S90W				

Note: A reduction ratio will be indicated as ✱✱✱ in the nomenclature.
Note: Please refer to page 174 for the performance table.

G Type Parallel Shaft | Shaft Diameter 32 | Foot Mounting

<Figure 1>

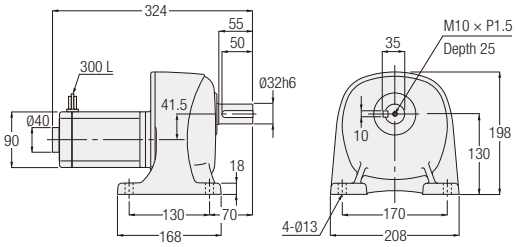

<Figure 2>

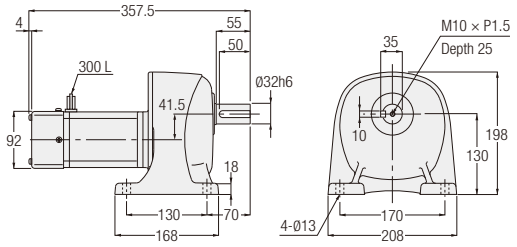

Number of Phases	Power	Part Number	Reduction Ratio	Figure Number	Controller	Approx. Weight (kg)
1-Phase	40 W	GLU-32-***-S40	1200, 1500, 1800	1	Set	11
		GLU-32-***-S40W				
		GLP-32-***-S40	1200, 1500, 1800	1	Sold Separately	11
		GLP-32-***-S40W				
	60 W	GLU-32-***-S60	1200, 1500, 1800	2	Set	11
		GLU-32-***-S60W				
		GLP-32-***-S60	1200, 1500, 1800	2	Sold Separately	11
		GLP-32-***-S60W				
	90 W	GLU-32-***-S90	600, 750, 900	2	Set	11
		GLU-32-***-S90W				
		GLP-32-***-S90	600, 750, 900	2	Sold Separately	11
		GLP-32-***-S90W				

Note: A reduction ratio will be indicated as *** in the nomenclature.
Note: Please refer to page 175 for the performance table.

G Type Parallel Shaft | Shaft Diameter 40 | Foot Mounting

<Figure 3>

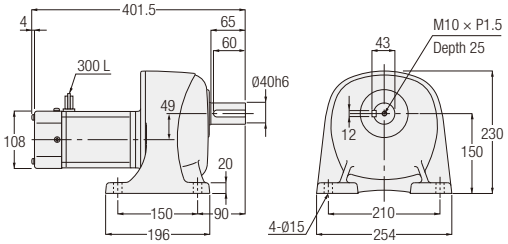

Number of Phases	Power	Part Number	Reduction Ratio	Figure Number	Controller	Approx. Weight (kg)
1-Phase	90 W	GLU-40-***-S90	1200, 1500, 1800	3	Set	15
		GLU-40-***-S90W				
		GLP-40-***-S90	1200, 1500, 1800	3	Sold Separately	15
		GLP-40-***-S90W				

Note: A reduction ratio will be indicated as *** in the nomenclature.
Note: Please refer to page 176 for the performance table.

G Type Parallel Shaft | Shaft Diameter 12 | Flange Mounting

<Figure 1>

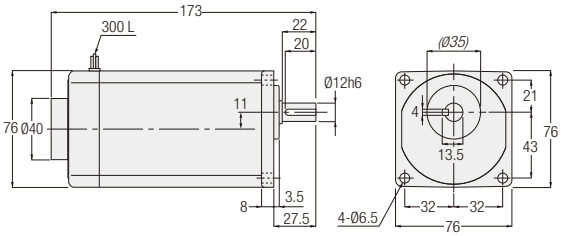

Note: The italic dimension indicates areas with remaining casting surface. Please add 0.5 mm or more to the italic dimension for the diameter of the mating hole.

Number of Phases	Power	Part Number	Reduction Ratio	Figure Number	Controller	Approx. Weight (kg)
1-Phase	15 W	GFU-12-✻✻✻-S15	5, 7.5, 10, 15, 20, 25, 30, 40, 50, 60, 80, 100, 120, 160, 200, 240	1	Set	2
		GFU-12-✻✻✻-S15W				
		GFP-12-✻✻✻-S15	5, 7.5, 10, 15, 20, 25, 30, 40, 50, 60, 80, 100, 120, 160, 200, 240	1	Sold Separately	2
		GFP-12-✻✻✻-S15W				
	25 W	GFU-12-✻✻✻-S25	5, 7.5, 10, 15, 20, 25, 30, 40, 50, 60, 80, 100, 120	1	Set	2
		GFU-12-✻✻✻-S25W				
		GFP-12-✻✻✻-S25	5, 7.5, 10, 15, 20, 25, 30, 40, 50, 60, 80, 100, 120	1	Sold Separately	2
		GFP-12-✻✻✻-S25W				

Note: A reduction ratio will be indicated as ✻✻✻ in the nomenclature.
Note: Please refer to page 174 for the performance table.

G Type Parallel Shaft | Shaft Diameter 15 | Flange Mounting

<Figure 2>

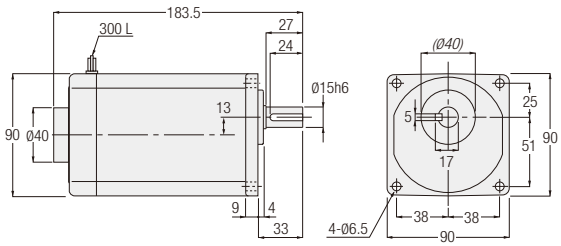

<Figure 3>

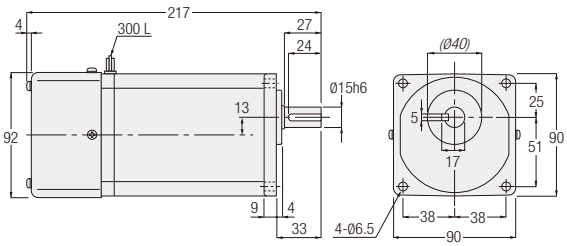

Note: The italic dimension indicates areas with remaining casting surface. Please add 0.5 mm or more to the italic dimension for the diameter of the mating hole.

Number of Phases	Power	Part Number	Reduction Ratio	Figure Number	Controller	Approx. Weight (kg)
1-Phase	25 W	GFU-15-✻✻✻-S25	160, 200, 240	2	Set	3
		GFU-15-✻✻✻-S25W				
		GFP-15-✻✻✻-S25	160, 200, 240	2	Sold Separately	3
		GFP-15-✻✻✻-S25W				
	40 W	GFU-15-✻✻✻-S40	5, 7.5, 10, 15, 20, 25, 30, 40, 50, 60, 80, 100, 120	2	Set	3
		GFU-15-✻✻✻-S40W				
		GFP-15-✻✻✻-S40	5, 7.5, 10, 15, 20, 25, 30, 40, 50, 60, 80, 100, 120	2	Sold Separately	3
		GFP-15-✻✻✻-S40W				
	60 W	GFU-15-✻✻✻-S60	5, 7.5, 10, 15, 20, 25, 30, 40, 50, 60	3	Set	3
		GFU-15-✻✻✻-S60W				
		GFP-15-✻✻✻-S60	5, 7.5, 10, 15, 20, 25, 30, 40, 50, 60	3	Sold Separately	3
		GFP-15-✻✻✻-S60W				
	90 W	GFU-15-✻✻✻-S90	5, 7.5, 10, 15, 20, 25, 30	3	Set	3
		GFU-15-✻✻✻-S90W				
		GFP-15-✻✻✻-S90	5, 7.5, 10, 15, 20, 25, 30	3	Sold Separately	3
		GFP-15-✻✻✻-S90W				

Note: A reduction ratio will be indicated as ✻✻✻ in the nomenclature.
Note: Please refer to page 174 for the performance table.

G Type Parallel Shaft | Shaft Diameter 18 | Flange Mounting

<Figure 1>

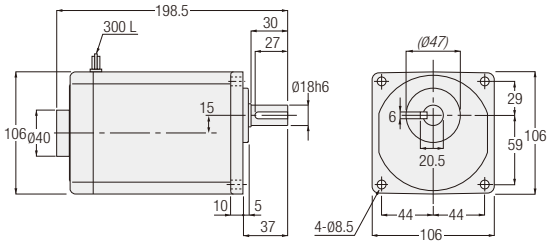

<Figure 2>

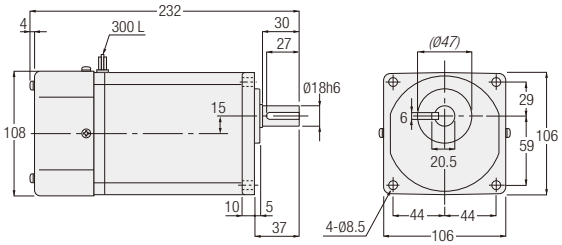

Note: The italic dimension indicates areas with remaining casting surface. Please add 0.5 mm or more to the italic dimension for the diameter of the mating hole.

Number of Phases	Power	Part Number	Reduction Ratio	Figure Number	Controller	Approx. Weight (kg)
1-Phase	40 W	GFU-18-✻✻✻-S40	160, 200, 240	1	Set	4
		GFU-18-✻✻✻-S40W				
		GFP-18-✻✻✻-S40	160, 200, 240	1	Sold Separately	4
		GFP-18-✻✻✻-S40W				
	60 W	GFU-18-✻✻✻-S60	80, 100, 120, 160, 200, 240	2	Set	4
		GFU-18-✻✻✻-S60W				
		GFP-18-✻✻✻-S60	80, 100, 120, 160, 200, 240	2	Sold Separately	4
		GFP-18-✻✻✻-S60W				
	90 W	GFU-18-✻✻✻-S90	40, 50, 60, 80, 100, 120, 160, 200, 240	2	Set	4
		GFU-18-✻✻✻-S90W				
		GFP-18-✻✻✻-S90	40, 50, 60, 80, 100, 120, 160, 200, 240	2	Sold Separately	4
		GFP-18-✻✻✻-S90W				

Note: A reduction ratio will be indicated as ✻✻✻ in the nomenclature.
Note: Please refer to page 175 for the performance table.

G Type Parallel Shaft | Shaft Diameter 22 | Flange Mounting

<Figure 3>

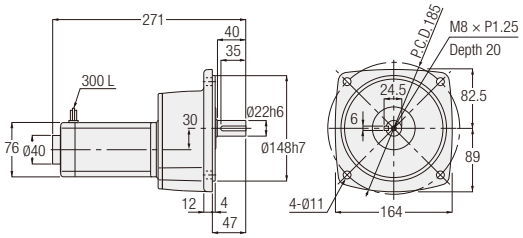

Number of Phases	Power	Part Number	Reduction Ratio	Figure Number	Controller	Approx. Weight (kg)
1-Phase	15 W	GFU-22-✻✻✻-S15	300, 375, 450, 600, 750, 900, 1200, 1500, 1800	3	Set	5
		GFU-22-✻✻✻-S15W				
		GFP-22-✻✻✻-S15	300, 375, 450, 600, 750, 900, 1200, 1500, 1800	3	Sold Separately	5
		GFP-22-✻✻✻-S15W				
	25 W	GFU-22-✻✻✻-S25	300, 375, 450, 600, 750, 900	3	Set	5
		GFU-22-✻✻✻-S25W				
		GFP-22-✻✻✻-S25	300, 375, 450, 600, 750, 900	3	Sold Separately	5
		GFP-22-✻✻✻-S25W				

Note: A reduction ratio will be indicated as ✻✻✻ in the nomenclature.
Note: Please refer to page 174 for the performance table.

G Type Parallel Shaft | Shaft Diameter 28 | Flange Mounting

<Figure 1>

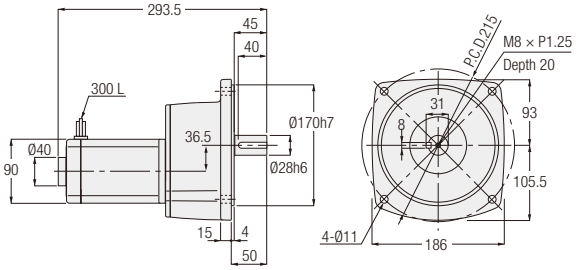

<Figure 2>

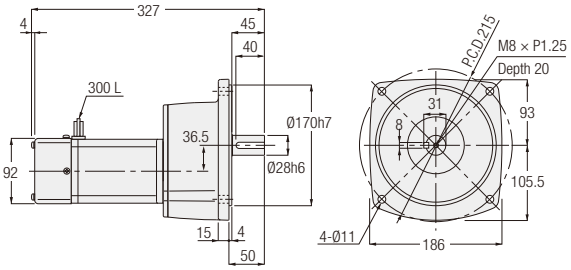

Number of Phases	Power	Part Number	Reduction Ratio	Figure Number	Controller	Approx. Weight (kg)
1-Phase	25 W	GFU-28-✱✱✱-S25	1200, 1500, 1800	1	Set	7
		GFU-28-✱✱✱-S25W				
		GFP-28-✱✱✱-S25	1200, 1500, 1800	1	Sold Separately	7
		GFP-28-✱✱✱-S25W				
	40 W	GFU-28-✱✱✱-S40	300, 375, 450, 600, 750, 900	1	Set	7
		GFU-28-✱✱✱-S40W				
		GFP-28-✱✱✱-S40	300, 375, 450, 600, 750, 900	1	Sold Separately	7
		GFP-28-✱✱✱-S40W				
	60 W	GFU-28-✱✱✱-S60	300, 375, 450, 600, 750, 900	2	Set	7
		GFU-28-✱✱✱-S60W				
		GFP-28-✱✱✱-S60	300, 375, 450, 600, 750, 900	2	Sold Separately	7
		GFP-28-✱✱✱-S60W				
	90 W	GFU-28-✱✱✱-S90	300, 375, 450	2	Set	7
		GFU-28-✱✱✱-S90W				
		GFP-28-✱✱✱-S90	300, 375, 450	2	Sold Separately	7
		GFP-28-✱✱✱-S90W				

Note: A reduction ratio will be indicated as ✱✱✱ in the nomenclature.
Note: Please refer to page 174 for the performance table.

G Type Parallel Shaft | Shaft Diameter 32 | Flange Mounting

<Figure 3>

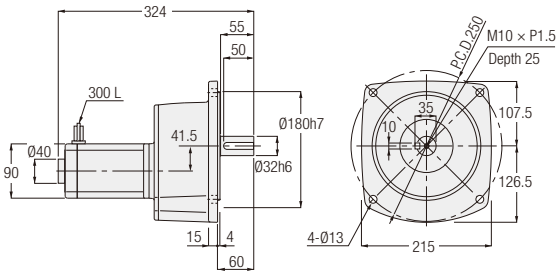

<Figure 4>

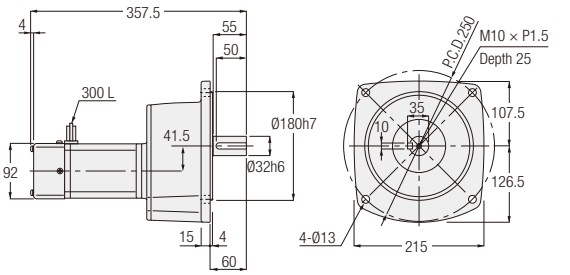

Number of Phases	Power	Part Number	Reduction Ratio	Figure Number	Controller	Approx. Weight (kg)
1-Phase	40 W	GFU-32-✱✱✱-S40	1200, 1500, 1800	3	Set	11
		GFU-32-✱✱✱-S40W				
		GFP-32-✱✱✱-S40	1200, 1500, 1800	3	Sold Separately	11
		GFP-32-✱✱✱-S40W				
	60 W	GFU-32-✱✱✱-S60	1200, 1500, 1800	4	Set	11
		GFU-32-✱✱✱-S60W				
		GFP-32-✱✱✱-S60	1200, 1500, 1800	4	Sold Separately	11
		GFP-32-✱✱✱-S60W				
	90 W	GFU-32-✱✱✱-S90	600, 750, 900	4	Set	11
		GFU-32-✱✱✱-S90W				
		GFP-32-✱✱✱-S90	600, 750, 900	4	Sold Separately	11
		GFP-32-✱✱✱-S90W				

Note: A reduction ratio will be indicated as ✱✱✱ in the nomenclature.
Note: Please refer to page 175 for the performance table.

G Type Parallel Shaft | Shaft Diameter 40 | Flange Mounting

<Figure 1>

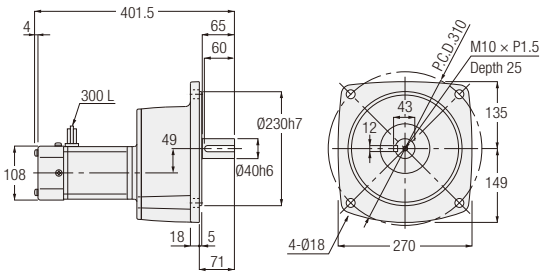

Number of Phases	Power	Part Number	Reduction Ratio	Figure Number	Controller	Approx. Weight (kg)
1-Phase	90 W	GFU-40-✱✱✱-S90	1200, 1500, 1800	1	Set	15
		GFU-40-✱✱✱-S90W				
		GFP-40-✱✱✱-S90	1200, 1500, 1800	1	Sold Separately	15
		GFP-40-✱✱✱-S90W				

Note: A reduction ratio will be indicated as ✱✱✱ in the nomenclature.
Note: Please refer to page 176 for the performance table.

G Type Parallel Shaft | Shaft Diameter 22 | Small Flange Mounting

<Figure 2>

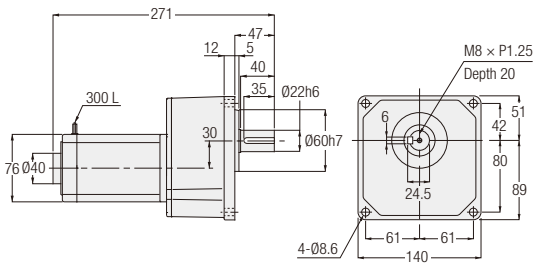

Number of Phases	Power	Part Number	Reduction Ratio	Figure Number	Controller	Approx. Weight (kg)
1-Phase	15 W	GKU-22-✱✱✱-S15	300, 375, 450, 600, 750, 900, 1200, 1500, 1800	2	Set	5
		GKU-22-✱✱✱-S15W				
		GKP-22-✱✱✱-S15	300, 375, 450, 600, 750, 900, 1200, 1500, 1800	2	Sold Separately	5
		GKP-22-✱✱✱-S15W				
	25 W	GKU-22-✱✱✱-S25	300, 375, 450, 600, 750, 900	2	Set	5
		GKU-22-✱✱✱-S25W				
		GKP-22-✱✱✱-S25	300, 375, 450, 600, 750, 900	2	Sold Separately	5
		GKP-22-✱✱✱-S25W				

Note: A reduction ratio will be indicated as ✱✱✱ in the nomenclature.
Note: Please refer to page 174 for the performance table.

G Type Parallel Shaft | Shaft Diameter 28 | Small Flange Mounting

<Figure 1>

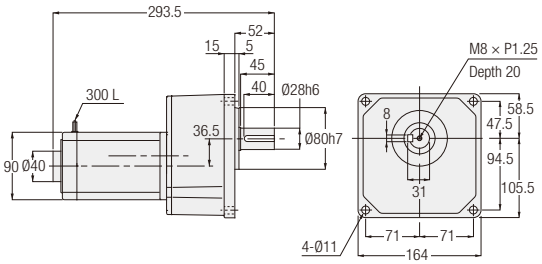

<Figure 2>

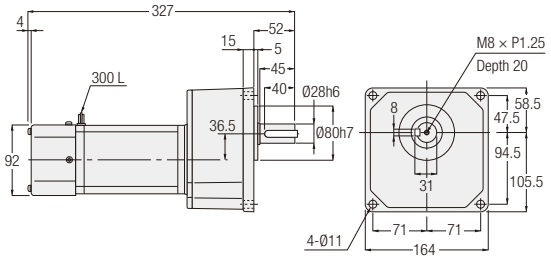

Number of Phases	Power	Part Number	Reduction Ratio	Figure Number	Controller	Approx. Weight (kg)
1-Phase	25 W	GKU-28-✱✱✱-S25	1200, 1500, 1800	1	Set	7
		GKU-28-✱✱✱-S25W				
		GKP-28-✱✱✱-S25	1200, 1500, 1800	1	Sold Separately	7
		GKP-28-✱✱✱-S25W				
	40 W	GKU-28-✱✱✱-S40	300, 375, 450, 600, 750, 900	1	Set	7
		GKU-28-✱✱✱-S40W				
		GKP-28-✱✱✱-S40	300, 375, 450, 600, 750, 900	1	Sold Separately	7
		GKP-28-✱✱✱-S40W				
	60 W	GKU-28-✱✱✱-S60	300, 375, 450, 600, 750, 900	2	Set	7
		GKU-28-✱✱✱-S60W				
		GKP-28-✱✱✱-S60	300, 375, 450, 600, 750, 900	2	Sold Separately	7
		GKP-28-✱✱✱-S60W				
	90 W	GKU-28-✱✱✱-S90	300, 375, 450	2	Set	7
		GKU-28-✱✱✱-S90W				
		GKP-28-✱✱✱-S90	300, 375, 450	2	Sold Separately	7
		GKP-28-✱✱✱-S90W				

Note: A reduction ratio will be indicated as ✱✱✱ in the nomenclature.
Note: Please refer to page 174 for the performance table.

G Type Parallel Shaft | Shaft Diameter 32 | Small Flange Mounting

<Figure 3>

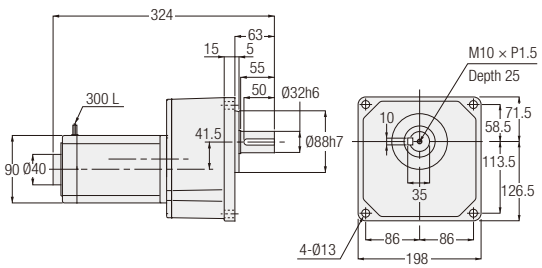

<Figure 4>

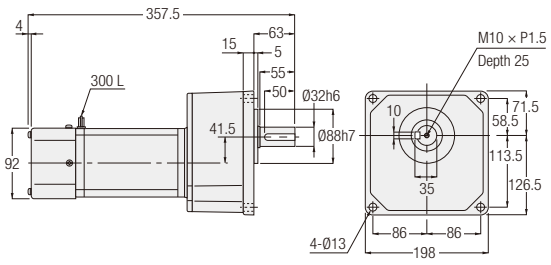

Number of Phases	Power	Part Number	Reduction Ratio	Figure Number	Controller	Approx. Weight (kg)
1-Phase	40 W	GKU-32-✱✱✱-S40	1200, 1500, 1800	3	Set	11
		GKU-32-✱✱✱-S40W				
		GKP-32-✱✱✱-S40	1200, 1500, 1800	3	Sold Separately	11
		GKP-32-✱✱✱-S40W				
	60 W	GKU-32-✱✱✱-S60	1200, 1500, 1800	4	Set	11
		GKU-32-✱✱✱-S60W				
		GKP-32-✱✱✱-S60	1200, 1500, 1800	4	Sold Separately	11
		GKP-32-✱✱✱-S60W				
	90 W	GKU-32-✱✱✱-S90	600, 750, 900	4	Set	11
		GKU-32-✱✱✱-S90W				
		GKP-32-✱✱✱-S90	600, 750, 900	4	Sold Separately	11
		GKP-32-✱✱✱-S90W				

Note: A reduction ratio will be indicated as ✱✱✱ in the nomenclature.
Note: Please refer to page 175 for the performance table.

MEMO

5. Gearboxes (Double Shaft Type)

5-1. Performance Table

G3 Type Gearboxes (Double Shaft Type)

[Notes]

- Allowable output shaft O.H.L. is the value at the middle of the output shaft.
- For the rotational direction of the output shaft, please refer to the figure shown below.
- The "*" mark indicates a limited torque type. Please make sure to check the allowable output shaft torque in the performance table.
- The motor power class value is the value when a 4 pole motor is used.

■ Rotational Direction Relationship

The rotational direction shown below with arrow illustrates the rotation relationship between the output shaft / input shaft and is no way illustrating limitations in rotational direction.

Power	Reduction Ratio
0.1 kW	1/5 to 1/50 and 1/300 to 1/1200
0.2 kW, 0.4 kW	1/5 to 1/30 and 1/300 to 1/1200
0.75 kW	1/5 to 1/30 and 1/300 to 1/450
1.5 kW, 2.2 kW	1/5 to 1/30

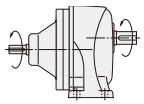

The input and output shafts rotate in the same direction.

Power	Reduction Ratio
0.1 kW	1/60 to 1/200
0.2 kW, 0.4 kW	1/40 to 1/200
0.75 kW, 1.5 kW	1/40 to 1/200
2.2 kW	1/40 to 1/100

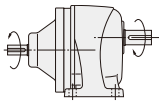

The input and output shafts rotate in the opposite directions.

4 Poles Motor Power Class	Frame Size	Reduction Ratio	Actual Reduction Ratio	Allowable Output Shaft Torque Input (1500 r/min)	Allowable O.H.L.		Drawings		
					N		Foot Mount	Flange Mount	Small Flange Mount
				N·m	Input Shaft	Output Shaft			
0.1 kW	18	1/5	33/164	3	176	770	P.191	P.195	P.198
		1/10	77/779	6.1		1140			
		1/15	119/1804	9.1		1270			
		1/20	49/984	12		1530			
		1/25	28/697	15		1650			
		1/30	35/1066	19		1780			
		1/40	35/1404	24		1910			
		1/50	7/351	29		2040			
	22	1/60	11/684	35	176	2800	P.191	P.195	P.198
		1/80	21/1634	47		3180			
		1/100	7/684	59		3180			
		1/120	147/17974	71		3180			
		1/160	21/3268	94		3180			
		1/200	21/4085	117		3180			
	28	1/300	221/65190	157	176	3430	P.192	P.196	P.199
		1/375	187/68370	196		3430			
		1/450	1183/521520	235		3430			
	32	1/600	147/88192	313	176	5880	P.192	P.196	P.199
		1/750	49/36464	391		5880			
		* 1/900	62/57063	431		5880			
		* 1/1200	46/55195	431		5880			
0.2 kW	18	1/5	33/164	6.1	196	770	P.191	P.195	P.198
		1/10	77/779	11.8		1140			
		1/15	119/1804	18.6		1270			
		1/20	49/984	24.5		1450			
		1/25	28/697	30.4		1550			
	22	1/30	7/216	36.3	196	2280	P.191	P.195	P.198
		1/40	91/3600	47		2410			
		1/50	11/540	58.8		2540			
		1/60	637/39600	70.6		2800			
		1/80	91/7200	94.1		3000			
		* 1/100	11/1080	97		3180			
	28	1/100	13/1353	117	196	3690	P.192	P.196	P.199
		1/120	91/11000	140		4320			
		1/160	1/165	187		4450			
		1/200	7/1375	234		4450			
	32	1/300	91/27348	313	196	5880	P.192	P.196	P.199
		1/375	77/28620	391		5880			
		1/450	91/41022	431		5880			
	40	1/600	9/5300	626	196	7060	P.193	P.197	-
		* 1/750	62/46427	764		7060			
		* 1/900	23/21259	764		7060			
		* 1/1200	9/10600	764		7060			

4 Poles Motor Power Class	Frame Size	Reduction Ratio	Actual Reduction Ratio	Allowable Output Shaft Torque Input (1500 r/min)	Allowable O.H.L.		Drawings		
					N		Foot Mount	Flange Mount	Small Flange Mount
				N·m	Input Shaft	Output Shaft			
0.4 kW	22	1/5	7/34	12	245	1140	P.191	P.195	P.198
		1/10	7/68	25		1530			
		1/15	49/748	36		1780			
		1/20	7/136	48		1910			
		1/25	7/170	61		2050			
	28	1/30	1/30	73	245	3310	P.192	P.196	P.199
		1/40	221/8610	94		3690			
		1/50	187/9030	117		4080			
		1/60	169/9840	140		4450			
		1/80	65/5166	187		4450			
		* 1/100	55/5418	193		4450			
	32	1/100	7/688	234	245	6370	P.192	P.196	P.199
		1/120	77/9360	281		7640			
		1/160	21/3328	374		7640			
		1/200	189/38272	431		7640			
	40	1/300	7/2160	626	245	7060	P.193	P.197	-
		* 1/375	77/29328	764		7060			
		* 1/450	49/21600	764		7060			
	50	* 1/600	57/35360	1225	245	9800	P.193	P.197	-
		* 1/750	25/19448	1225		9800			
		* 1/900	5/4338	1225		9800			
		* 1/1200	33/40664	1225		9800			
0.75 kW	28	1/5	91/459	23	294	1650	P.192	P.196	P.199
		1/10	1/10	45		2280			
		1/15	91/1360	68		2800			
		1/20	5/102	91		3050			
		1/25	7/170	114		3180			
	32	1/30	3/92	136	294	5220	P.192	P.196	P.199
		1/40	13/516	175		5470			
		1/50	11/540	220		5780			
		1/60	13/774	264		6080			
		1/80	13/1032	351		6180			
		* 1/100	11/1080	362		6770			
	40	1/100	91/9000	439	294	9170	P.193	P.197	-
		1/120	77/9400	527		9170			
		1/160	9/1400	703		9170			
		1/200	9/1750	764		9170			
	50	1/300	211/62013	1176	294	9800	P.193	P.197	
		* 1/375	94/36103	1225		9800			
		* 1/450	65/29167	1225		9800			
1.5 kW	32	1/5	1/5	45	343	2280	P.192	P.196	P.199
		1/10	1/10	91		3180			
		1/15	1/15	136		3690			
		1/20	1/20	181		4190			
		1/25	9/230	226		4410			
	40	1/30	1/30	272	343	6600	P.193	P.197	-
		1/40	13/540	351		6960			
		1/50	11/564	439		6960			
		1/60	91/5400	527		7210			
		1/80	13/1080	703		7400			
		* 1/100	11/1128	724		7400			
	50	1/100	25/2618	878	343	12500	P.193	P.197	-
		1/120	77/8993	1060		12500			
		* 1/160	33/5474	1230		12500			
		* 1/200	30/5831	1230		12500			
2.2 kW	40	1/5	7/36	66	392	2800	P.193	P.197	-
		1/10	7/72	131		4080			
		1/15	49/720	197		4580			
		1/20	7/144	264		5220			
		1/25	7/180	329		6110			
	50	1/30	5/154	395	392	9040	P.193	P.197	
		1/40	399/15488	499		9420			
		1/50	399/20240	623		10000			
		1/60	49/2904	748		10000			
		1/80	49/3795	1000		10100			
		* 1/100	21/2116	1230		10100			

GA Type Gearboxes (Double Shaft Type)

[Notes]

- Allowable output shaft O.H.L. is the value at the middle of the output shaft.
- For the rotational direction of the output shaft, please refer to the figure shown below.
- The "*" mark indicates a limited torque type. Please make sure to check the allowable output shaft torque in the performance table.
- The motor power class value is the value when a 4 pole motor is used.

■ Rotational Direction Relationship

The rotational direction shown below with arrow illustrates the rotation relationship between the output shaft / input shaft and is no way illustrating limitations in rotational direction.

Power	Reduction Ratio
0.4 kW	1/600 to 1/1200
0.75 kW	1/300 to 1/450
1.5 kW, 2.2 kW	1/30

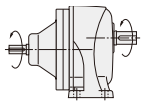

The input and output shafts rotate in the same direction.

Power	Reduction Ratio
2.2 kW	1/40 to 1/100

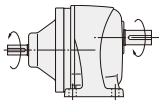

The input and output shafts rotate in the opposite directions.

4 Poles Motor Power Class	Frame Size	Reduction Ratio	Actual Reduction Ratio	Allowable Output Shaft Torque Input (1500 r/min)	Allowable O.H.L.		Drawings		
					N		Foot Mount	Flange Mount	Small Flange Mount
				N·m	Input Shaft	Output Shaft			
0.4 kW	50	* 1/600	57/35360	1225	245	9800	P.194	-	-
		* 1/750	25/19448	1225		9800			
		* 1/900	5/4338	1225		9800			
		* 1/1200	33/40664	1225		9800			
0.75 kW	50	1/300	211/62013	1176	294	9800	P.194	-	
		* 1/375	94/36103	1225		9800			
		* 1/450	65/29167	1225		9800			
1.5 kW	50	1/100	25/2618	878	343	12500	P.194	-	-
		1/120	77/8993	1060		12500			
		* 1/160	33/5474	1230		12500			
		* 1/200	30/5831	1230		12500			
2.2 kW	50	1/30	5/154	395	392	9040	P.194	-	
		1/40	399/15488	499		9420			
		1/50	399/20240	623		10000			
		1/60	49/2904	748		10000			
		1/80	49/3795	1000		10100			
		* 1/100	21/2116	1230		10100			

5-2. Drawings

G3 Type Parallel Shaft | Shaft Diameter **18** | **Foot** Mounting

<Figure 1>

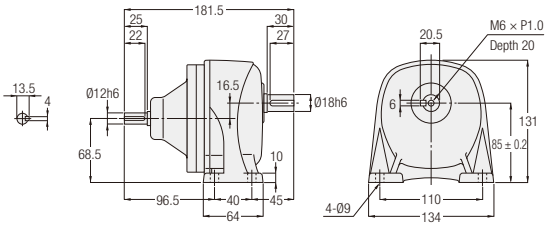

Power Class	Part Number	Reduction Ratio	Figure Number	Approx. Weight (kg)
0.1 kW	G3L-18-✱✱✱-010	5, 10, 15, 20, 25, 30, 40, 50	1	2.5
0.2 kW	G3L-18-✱✱✱-020	5, 10, 15, 20, 25	1	2.5

Note: A reduction ratio will be indicated as ✱✱✱ in the nomenclature.
Note: Please refer to page 188 for the performance table.

G3 Type Parallel Shaft | Shaft Diameter **22** | **Foot** Mounting

<Figure 2>

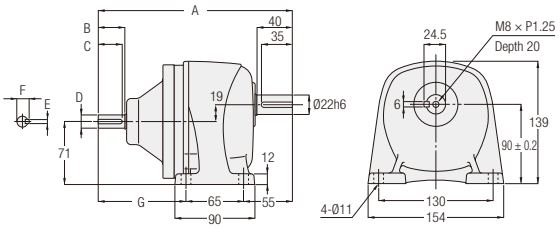

Power Class	Part Number	Reduction Ratio	Figure Number	Approx. Weight (kg)	A	B	C	D	E	F	G
0.1 kW	G3L-22-✱✱✱-010	60, 80, 100, 120, 160, 200	2	3.5	207.5	25	22	Ø12h6	4	13.5	87.5
0.2 kW	G3L-22-✱✱✱-020	30, 40, 50, 60, 80, 100	2	3.5	207.5	25	22	Ø12h6	4	13.5	87.5
0.4 kW	G3L-22-✱✱✱-040	5, 10, 15, 20, 25	2	4	219	30	27	Ø15h6	5	17	99

Note: A reduction ratio will be indicated as ✱✱✱ in the nomenclature.
Note: Please refer to page 188 for the performance table.

G3 Type Parallel Shaft | Shaft Diameter 28 | Foot Mounting

<Figure 1>

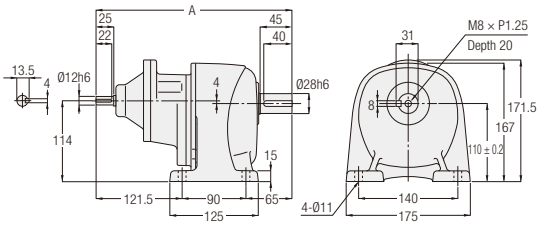

<Figure 2>

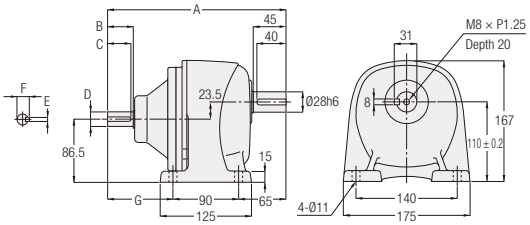

Power Class	Part Number	Reduction Ratio	Figure Number	Approx. Weight (kg)	A	B	C	D	E	F	G
0.1 kW	G3L-28-***-010	300, 375, 450	1	6.5	276.5	-	-	-	-	-	-
0.2 kW	G3L-28-***-020	100, 120, 160, 200	2	5.5	220.5	25	22	Ø12h6	4	13.5	65.5
0.4 kW	G3L-28-***-040	30, 40, 50, 60, 80, 100	2	6	235	30	27	Ø15h6	5	17	80
0.75 kW	G3L-28-***-075	5, 10, 15, 20, 25	2	6	244.5	35	32	Ø20h6	6	22.5	89.5

Note: A reduction ratio will be indicated as *** in the nomenclature.
Note: Please refer to page 188 for the performance table.

G3 Type Parallel Shaft | Shaft Diameter 32 | Foot Mounting

<Figure 3>

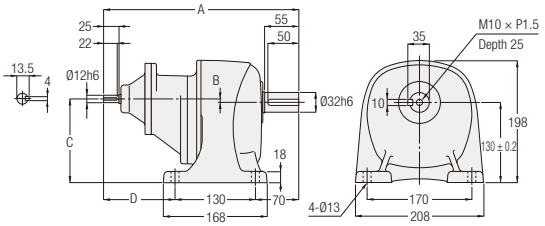

<Figure 4>

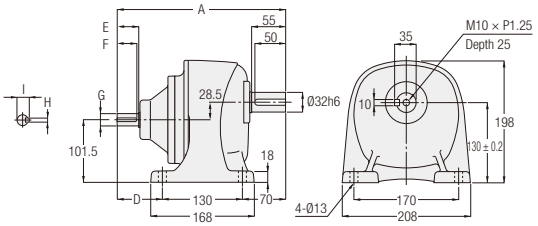

Power Class	Part Number	Reduction Ratio	Figure Number	Approx. Weight (kg)	A	B	C	D	E	F	G	H	I
0.1 kW	G3L-32-***-010	600, 750, 900, 1200	3	9.5	295.5	-1	129	95.5	-	-	-	-	-
0.2 kW	G3L-32-***-020	300, 375, 450	3	9.5	315.5	5.5	135.5	115.5	-	-	-	-	-
0.4 kW	G3L-32-***-040	100, 120, 160, 200	4	9	254	-	-	54	30	27	Ø15h6	5	17
0.75 kW	G3L-32-***-075	30, 40, 50, 60, 80, 100	4	9.5	273.5	-	-	73.5	35	32	Ø20h6	6	22.5
1.5 kW	G3L-32-***-150	5, 10, 15, 20, 25	4	10	297	-	-	97	40	35	Ø25h6	8	28

Note: A reduction ratio will be indicated as *** in the nomenclature.
Note: Please refer to page 188 for the performance table.

G3 Type Parallel Shaft | Shaft Diameter 40 | Foot Mounting

<Figure 1>

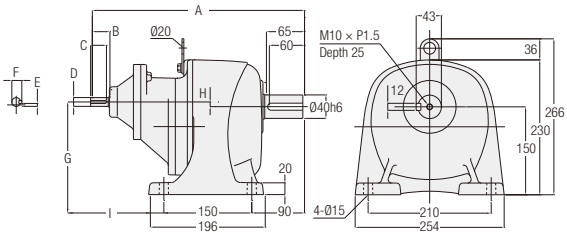

<Figure 2>

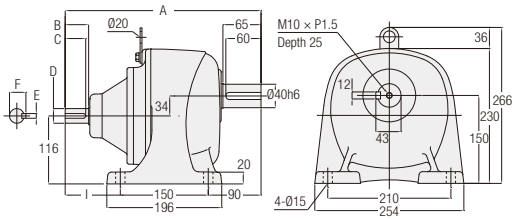

Note: Gearmotors with a motor power of 0.2 kW or 0.75 kW does not include the hanging plate.

Power Class	Part Number	Reduction Ratio	Figure Number	Approx. Weight (kg)	A	B	C	D	E	F	G	H	I
0.2 kW	G3L-40-✻✻✻-020	600, 750, 900, 1200	1	16	337.5	25	22	Ø12h6	4	13.5	150	0	97.5
0.4 kW	G3L-40-✻✻✻-040	300, 375, 450	1	17.5	362	30	27	Ø15h6	5	17	158	8	122
0.75 kW	G3L-40-✻✻✻-075	100, 120, 160, 200	2	16	295.5	35	32	Ø20h6	6	22.5	-	-	55.5
1.5 kW	G3L-40-✻✻✻-150	30, 40, 50, 60, 80, 100	2	17	334	40	35	Ø25h6	8	28	-	-	94
2.2 kW	G3L-40-✻✻✻-220	5, 10, 15, 20, 25	2	16.5	330	45	40	Ø30h6	8	33	-	-	90

Note: A reduction ratio will be indicated as ✻✻✻ in the nomenclature.
Note: Please refer to page 188 for the performance table.

G3 Type Parallel Shaft | Shaft Diameter 50 | Foot Mounting

<Figure 3>

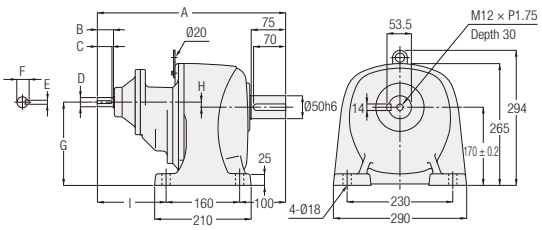

<Figure 4>

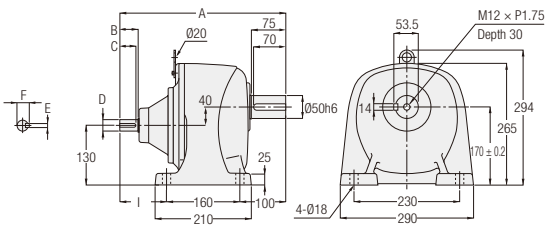

Power Class	Part Number	Reduction Ratio	Figure Number	Approx. Weight (kg)	A	B	C	D	E	F	G	H	I
0.4 kW	G3L-50-✻✻✻-040	600, 750, 900, 1200	3	47	390	30	27	Ø15h6	5	17	172	2	130
0.75 kW	G3L-50-✻✻✻-075	300, 375, 450	3	47.5	409.5	35	32	Ø20h6	6	22.5	181	11	149.5
1.5 kW	G3L-50-✻✻✻-150	100, 120, 160, 200	4	46.5	362	40	35	Ø25h6	8	28	-	-	102
2.2 kW	G3L-50-✻✻✻-220	30, 40, 50, 60, 80, 100	4	46.5	374	45	40	Ø30h6	8	33	-	-	114

Note: A reduction ratio will be indicated as ✻✻✻ in the nomenclature.
Note: Please refer to page 189 for the performance table.

GA Type Parallel Shaft | Shaft Diameter 50 | Foot Mounting

<Figure 1>

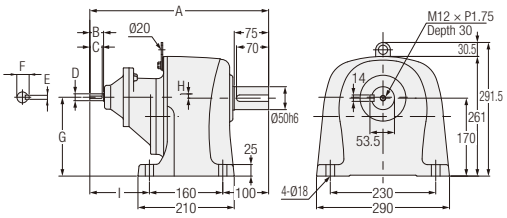

<Figure 2>

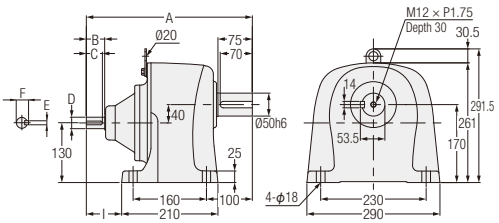

Power Class	Part Number	Reduction Ratio	Figure Number	Approx. Weight (kg)	A	B	C	D	E	F	G	H	I
0.4 kW	GAL-50-✱✱✱-040	600, 750, 900, 1200	1	27.5	390	30	27	Ø15h6	5	17	172	2	130
0.75 kW	GAL-50-✱✱✱-075	300, 375, 450	1	28	409.5	35	32	Ø20h6	6	22.5	181	11	149.5
1.5 kW	GAL-50-✱✱✱-150	100, 120, 160, 200	2	27	362	40	35	Ø25h6	8	28	-	-	102
2.2 kW	GAL-50-✱✱✱-220	30, 40, 50, 60, 80, 100	2	27	374	45	40	Ø30h6	8	33	-	-	114

Note: A reduction ratio will be indicated as ✱✱✱ in the nomenclature.
Note: Please refer to page 190 for the performance table.

G3 Type Parallel Shaft | Shaft Diameter 18 | Flange Mounting

<Figure 1>

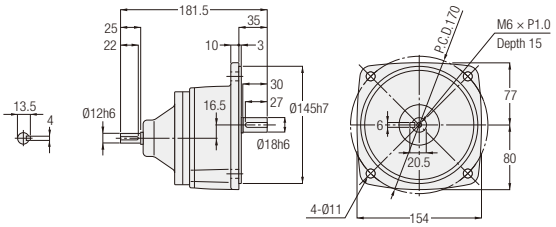

Power Class	Part Number	Reduction Ratio	Figure Number	Approx. Weight (kg)
0.1 kW	G3F-18-✱✱✱-010	5, 10, 15, 20, 25, 30, 40, 50	1	3
0.2 kW	G3F-18-✱✱✱-020	5, 10, 15, 20, 25	1	3

Note: A reduction ratio will be indicated as ✱✱✱ in the nomenclature.
Note: Please refer to page 188 for the performance table.

G Type Parallel Shaft | Shaft Diameter 22 | Flange Mounting

<Figure 2>

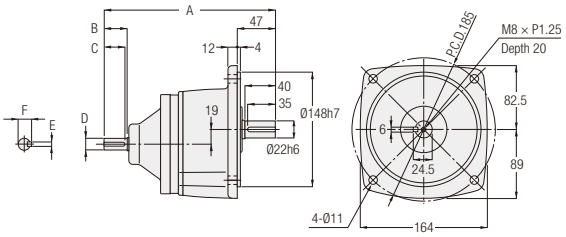

Power Class	Part Number	Reduction Ratio	Figure Number	Approx. Weight (kg)	A	B	C	D	E	F
0.1 kW	G3F-22-✱✱✱-010	60, 80, 100, 120, 160, 200	2	4	207.5	25	22	Ø12h6	4	13.5
0.2 kW	G3F-22-✱✱✱-020	30, 40, 50, 60, 80, 100	2	4	207.5	25	22	Ø12h6	4	13.5
0.4 kW	G3F-22-✱✱✱-040	5, 10, 15, 20, 25	2	4.5	219	30	27	Ø15h6	5	17

Note: A reduction ratio will be indicated as ✱✱✱ in the nomenclature.
Note: Please refer to page 188 for the performance table.

G3 Type Parallel Shaft | Shaft Diameter 28 | Flange Mounting

<Figure 1>

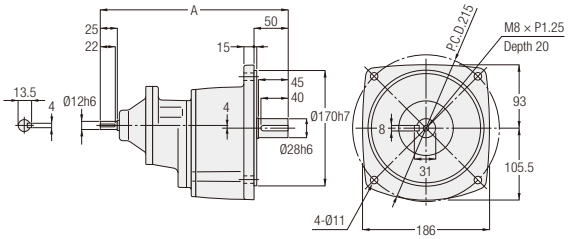

<Figure 2>

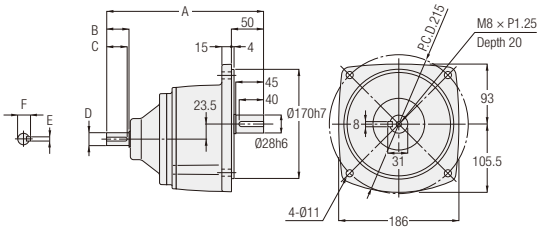

Power Class	Part Number	Reduction Ratio	Figure Number	Approx. Weight (kg)	A	B	C	D	E	F
0.1 kW	G3F-28-✱✱✱-010	300, 375, 450	1	7	276.5	-	-	-	-	-
0.2 kW	G3F-28-✱✱✱-020	100, 120, 160, 200	2	6	220.5	25	22	Ø12h6	4	13.5
0.4 kW	G3F-28-✱✱✱-040	30, 40, 50, 60, 80, 100	2	6.5	235	30	27	Ø15h6	5	17
0.75 kW	G3F-28-✱✱✱-075	5, 10, 15, 20, 25	2	6.5	244.5	35	32	Ø20h6	6	22.5

Note: A reduction ratio will be indicated as ✱✱✱ in the nomenclature.
Note: Please refer to page 188 for the performance table.

G3 Type Parallel Shaft | Shaft Diameter 32 | Flange Mounting

<Figure 3>

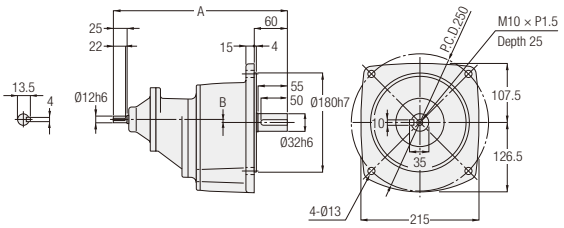

<Figure 4>

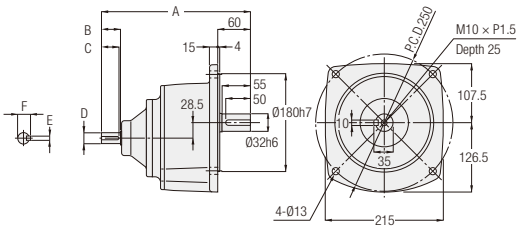

Power Class	Part Number	Reduction Ratio	Figure Number	Approx. Weight (kg)	A	B	C	D	E	F
0.1 kW	G3F-32-✱✱✱-010	600, 750, 900, 1200	3	10	295.5	-1	-	-	-	-
0.2 kW	G3F-32-✱✱✱-020	300, 375, 450	3	10	315.5	5.5	-	-	-	-
0.4 kW	G3F-32-✱✱✱-040	100, 120, 160, 200	4	9.5	254	30	27	Ø15h6	5	17
0.75 kW	G3F-32-✱✱✱-075	30, 40, 50, 60, 80, 100	4	10	273.5	35	32	Ø20h6	6	22.5
1.5 kW	G3F-32-✱✱✱-150	5, 10, 15, 20, 25	4	10.5	297	40	35	Ø25h6	8	28

Note: A reduction ratio will be indicated as ✱✱✱ in the nomenclature.
Note: Please refer to page 188 for the performance table.

G3 Type Parallel Shaft | Shaft Diameter 40 | Flange Mounting

<Figure 1>

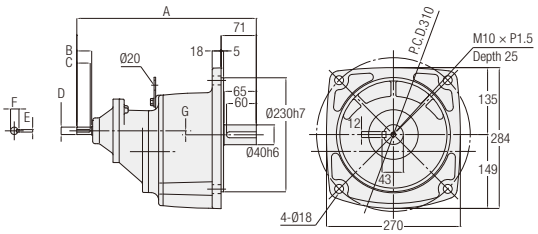

<Figure 2>

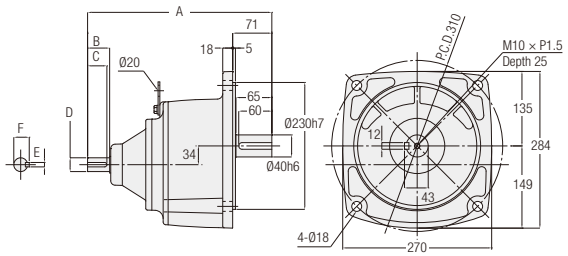

Note: Gearmotors with a motor power of 0.2 kW or 0.75 kW does not include the hanging plate.

Power Class	Part Number	Reduction Ratio	Figure Number	Approx. Weight (kg)	A	B	C	D	E	F	G
0.2 kW	G3F-40-✱✱✱-020	600, 750, 900, 1200	1	17.5	337.5	25	22	Ø12h6	4	13.5	0
0.4 kW	G3F-40-✱✱✱-040	300, 375, 450	1	19	362	30	27	Ø15h6	5	17	8
0.75 kW	G3F-40-✱✱✱-075	100, 120, 160, 200	2	17.5	295.5	35	32	Ø20h6	6	22.5	-
1.5 kW	G3F-40-✱✱✱-150	30, 40, 50, 60, 80, 100	2	18.5	334	40	35	Ø25h6	8	28	-
2.2 kW	G3F-40-✱✱✱-220	5, 10, 15, 20, 25	2	18	330	45	40	Ø30h6	8	33	-

Note: A reduction ratio will be indicated as ✱✱✱ in the nomenclature.
Note: Please refer to page 188 for the performance table.

G Type Parallel Shaft | Shaft Diameter 50 | Flange Mounting

<Figure 3>

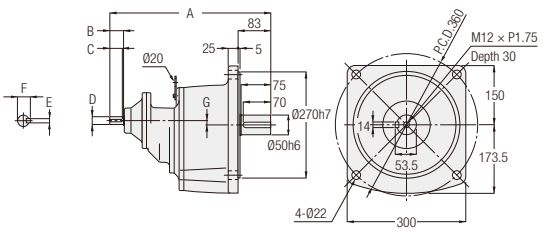

<Figure 4>

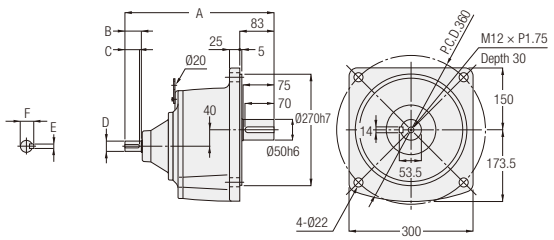

Power Class	Part Number	Reduction Ratio	Figure Number	Approx. Weight (kg)	A	B	C	D	E	F	G
0.4 kW	G3F-50-✱✱✱-040	600, 750, 900, 1200	3	52	390	30	27	Ø15h6	5	17	2
0.75 kW	G3F-50-✱✱✱-075	300, 375, 450	3	52.5	409.5	35	32	Ø20h6	6	22.5	11
1.5 kW	G3F-50-✱✱✱-150	100, 120, 160, 200	4	51.5	362	40	35	Ø25h6	8	28	-
2.2 kW	G3F-50-✱✱✱-220	30, 40, 50, 60, 80, 100	4	51.5	374	45	40	Ø30h6	8	33	-

Note: A reduction ratio will be indicated as ✱✱✱ in the nomenclature.
Note: Please refer to page 189 for the performance table.

G3 Type Parallel Shaft | Shaft Diameter 18 | Small Flange Mounting

<Figure 1>

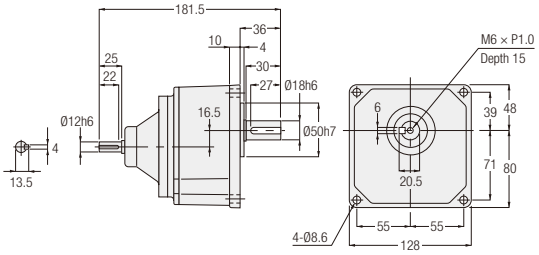

Power Class	Part Number	Reduction Ratio	Figure Number	Approx. Weight (kg)
0.1 kW	G3K-18-✱✱✱-010	5, 10, 15, 20, 25, 30, 40, 50	1	3
0.2 kW	G3K-18-✱✱✱-020	5, 10, 15, 20, 25	1	3

Note: A reduction ratio will be indicated as ✱✱✱ in the nomenclature.
Note: Please refer to page 188 for the performance table.

G3 Type Parallel Shaft | Shaft Diameter 22 | Small Flange Mounting

<Figure 2>

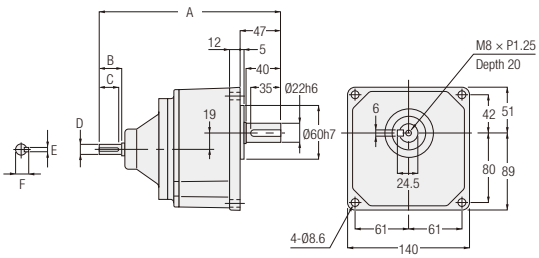

Power Class	Part Number	Reduction Ratio	Figure Number	Approx. Weight (kg)	A	B	C	D	E	F
0.1 kW	G3K-22-✱✱✱-010	60, 80, 100, 120, 160, 200	2	4	207.5	25	22	Ø12h6	4	13.5
0.2 kW	G3K-22-✱✱✱-020	30, 40, 50, 60, 80, 100	2	4	207.5	25	22	Ø12h6	4	13.5
0.4 kW	G3K-22-✱✱✱-040	5, 10, 15, 20, 25	2	4.5	219	30	27	Ø15h6	5	17

Note: A reduction ratio will be indicated as ✱✱✱ in the nomenclature.
Note: Please refer to page 188 for the performance table.

G3 Type Parallel Shaft | Shaft Diameter 28 | Small Flange Mounting

<Figure 1>

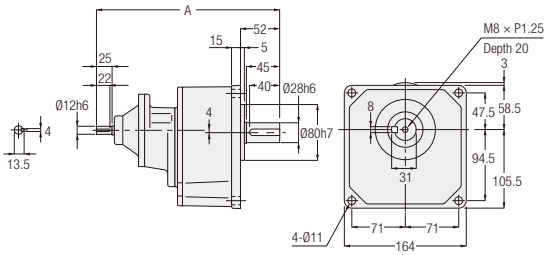

<Figure 2>

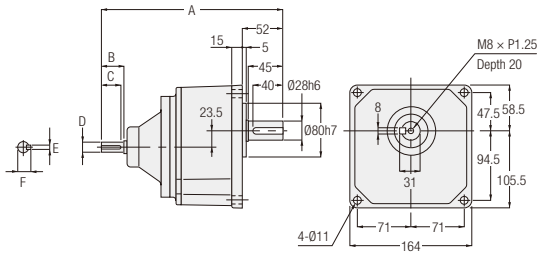

Power Class	Part Number	Reduction Ratio	Figure Number	Approx. Weight (kg)	A	B	C	D	E	F
0.1 kW	G3K-28-✱✱✱-010	300, 375, 450	1	7	276.5	-	-	-	-	-
0.2 kW	G3K-28-✱✱✱-020	100, 120, 160, 200	2	6	220.5	25	22	Ø12h6	4	13.5
0.4 kW	G3K-28-✱✱✱-040	30, 40, 50, 60, 80, 100	2	6.5	235	30	27	Ø15h6	5	17
0.75 kW	G3K-28-✱✱✱-075	5, 10, 15, 20, 25	2	6.5	244.5	35	32	Ø20h6	6	22.5

Note: A reduction ratio will be indicated as ✱✱✱ in the nomenclature.
Note: Please refer to page 188 for the performance table.

G3 Type Parallel Shaft | Shaft Diameter 32 | Small Flange Mounting

<Figure 3>

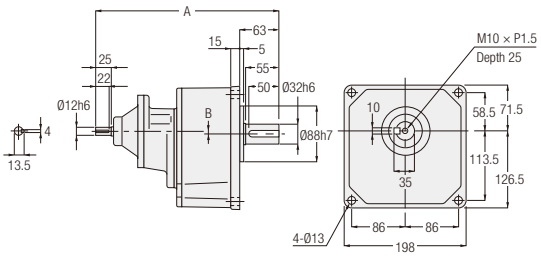

<Figure 4>

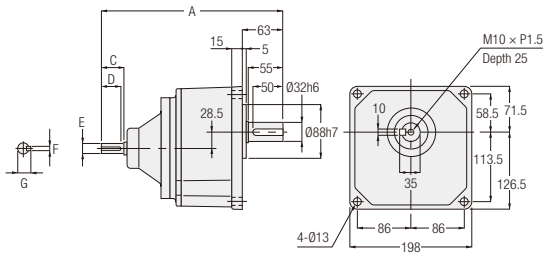

Power Class	Part Number	Reduction Ratio	Figure Number	Approx. Weight (kg)	A	B	C	D	E	F	G
0.1 kW	G3K-32-✱✱✱-010	600, 750, 900, 1200	3	10	295.5	-1	-	-	-	-	-
0.2 kW	G3K-32-✱✱✱-020	300, 375, 450	3	10	315.5	5.5	-	-	-	-	-
0.4 kW	G3K-32-✱✱✱-040	100, 120, 160, 200	4	9.5	254	-	30	27	Ø15h6	5	17
0.75 kW	G3K-32-✱✱✱-075	30, 40, 50, 60, 80, 100	4	10	273.5	-	35	32	Ø20h6	6	22.5
1.5 kW	G3K-32-✱✱✱-150	5, 10, 15, 20, 25	4	10.5	297	-	40	35	Ø25h6	8	28

Note: A reduction ratio will be indicated as ✱✱✱ in the nomenclature.
Note: Please refer to page 188 for the performance table.

6. S-Type Gearboxes (Type That Can Be Equipped with Designated Motor)

6-1. Performance Table

G3 Type S-Type Gearboxes (Type which Can be Equipped with Designated Motor)

[Notes]
- The motor power class value is the value when a 4 pole motor is used.
- When using an output shaft for a motor other than a 4 pole motor, the value obtained by multiplying the torque by the torque correction coefficient shown on page 626 shall be the allowable output shaft torque at the rotation.
- Allowable output shaft O.H.L. is the value at the middle of the output shaft.
- For the rotational direction of the output shaft, please refer to the figure shown below.
- The "*" mark indicates a limited torque type. Please make sure to check the allowable output shaft torque in the performance table.

■ Rotational Direction Relationship

The rotational direction shown below with arrow illustrates the rotation relationship between the output shaft / input shaft and is no way illustrating limitations in rotational direction.

Power	Reduction Ratio
0.1 kW	1/5 to 1/50 and 1/300 to 1/1200
0.2 kW, 0.4 kW	1/5 to 1/30 and 1/300 to 1/1200
0.75 kW	1/5 to 1/30 and 1/300 to 1/450
1.5 kW, 2.2 kW	1/5 to 1/30

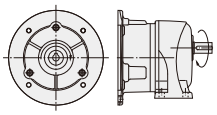

The input and output shafts rotate in the same direction.

Power	Reduction Ratio
0.1 kW	1/60 to 1/200
0.2 kW, 0.4 kW	1/40 to 1/200
0.75 kW, 1.5 kW	1/40 to 1/200
2.2 kW	1/40 to 1/100

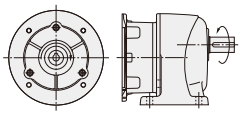

The input and output shafts rotate in the opposite directions.

4 Poles Motor Power Class	Frame Size	Reduction Ratio	Actual Reduction Ratio	Allowable Output Shaft Torque N·m		Allowable Output Shaft O.H.L.	Drawings		
				50 Hz	60 Hz	N	Foot Mount	Flange Mount	Small Flange Mount
0.1 kW	18	1/5	33/164	3	2.5	770	P.203	P.209	P.212
		1/10	77/779	6.1	5	1140			
		1/15	119/1804	9.1	7.5	1270			
		1/20	49/984	12	9.8	1530			
		1/25	28/697	15	12.7	1650			
		1/30	35/1066	19	14.7	1780			
		1/40	35/1404	24	19.6	1910			
		1/50	7/351	29	24.5	2040			
	22	1/60	11/684	35	29.4	2800	P.203	P.209	P.213
		1/80	21/1634	47	39.2	3180			
		1/100	7/684	59	49	3180			
		1/120	147/17974	71	58.8	3180			
		1/160	21/3268	94	78.4	3180			
		1/200	21/4085	117	98	3180			
	28	1/300	221/65190	157	130	3430	P.204	P.210	P.214
		1/375	187/68370	196	163	3430			
		1/450	1183/521520	235	196	3430			
	32	1/600	147/88192	313	261	5880	P.205	P.211	P.215
		1/750	49/36464	391	326	5880			
		* 1/900	62/57063	431	391	5880			
		* 1/1200	46/55195	431	431	5880			
0.2 kW	18	1/5	33/164	6.1	5	770	P.203	P.209	P.212
		1/10	77/779	11.8	9.8	1140			
		1/15	119/1804	18.6	14.7	1270			
		1/20	49/984	24.5	20.6	1450			
		1/25	28/697	30.4	25.5	1550			
	22	1/30	7/216	36.3	30.4	2280	P.203	P.209	P.213
		1/40	91/3600	47	39.2	2410			
		1/50	11/540	58.8	49	2540			
		1/60	637/39600	70.6	58.8	2800			
		1/80	91/7200	94.1	78.4	3000			
		* 1/100	11/1080	97	80.4	3180			
	28	1/100	13/1353	117	98	3690	P.204	P.210	P.214
		1/120	91/11000	140	117	4320			
		1/160	1/165	187	156	4450			
		1/200	7/1375	234	195	4450			
	32	1/300	91/27348	313	261	5880	P.205	P.211	P.215
		1/375	77/28620	391	326	5880			
		1/450	91/41022	431	391	5880			
	40	1/600	9/5300	626	521	7060	P.206	P.211	-
		* 1/750	62/46427	764	653	7060			
		* 1/900	23/21259	764	764	7060			
		* 1/1200	9/10600	764	764	7060			

4 Poles Motor Power Class	Frame Size	Reduction Ratio	Actual Reduction Ratio	Allowable Output Shaft Torque N·m		Allowable Output Shaft O.H.L.	Drawings		
				50 Hz	60 Hz	N	Foot Mount	Flange Mount	Small Flange Mount
0.4 kW	22	1/5	7/34	12	10	1140	P.203	P.209	P.213
		1/10	7/68	25	21	1530			
		1/15	49/748	36	30	1780			
		1/20	7/136	48	40	1910			
		1/25	7/170	61	50	2050			
	28	1/30	1/30	73	61	3310	P.204	P.210	P.214
		1/40	221/8610	94	78	3690			
		1/50	187/9030	117	98	4080			
		1/60	169/9840	140	117	4450			
		1/80	65/5166	187	156	4450			
		* 1/100	55/5418	193	161	4450			
	32	1/100	7/688	234	195	6370	P.205	P.211	P.215
		1/120	77/9360	281	234	7640			
		1/160	21/3328	374	313	7640			
		1/200	189/38272	431	390	7640			
	40	1/300	7/2160	626	521	7060	P.206	P.211	-
		* 1/375	77/29328	764	653	7060			
		* 1/450	49/21600	764	764	7060			
	50	* 1/600	57/35360	1225	1044	9800	P.207	P.212	-
		* 1/750	25/19448	1225	1225	9800			
		* 1/900	5/4338	1225	1225	9800			
		* 1/1200	33/40664	1225	1225	9800			
0.75 kW	28	1/5	91/459	23	19	1650	P.204	P.210	P.214
		1/10	1/10	45	38	2280			
		1/15	91/1360	68	57	2800			
		1/20	5/102	91	75	3050			
		1/25	7/170	114	94	3180			
	32	1/30	3/92	136	114	5220	P.205	P.211	P.215
		1/40	13/516	175	146	5470			
		1/50	11/540	220	183	5780			
		1/60	13/774	264	220	6080			
		1/80	13/1032	351	293	6180			
		* 1/100	11/1080	362	302	6770			
	40	1/100	91/9000	439	366	9170	P.206	P.211	-
		1/120	77/9400	527	439	9170			
		1/160	9/1400	703	585	9170			
		1/200	9/1750	764	732	9170			
	50	1/300	211/62013	1176	978	9800	P.207	P.212	-
		* 1/375	94/36103	1225	1225	9800			
		* 1/450	65/29167	1225	1225	9800			
1.5 kW	32	1/5	1/5	45	38	2280	P.205	P.211	P.215
		1/10	1/10	91	75	3180			
		1/15	1/15	136	114	3690			
		1/20	1/20	181	151	4190			
		1/25	9/230	226	189	4410			
	40	1/30	1/30	272	226	6600	P.206	P.211	-
		1/40	13/540	351	293	6960			
		1/50	11/564	439	366	6960			
		1/60	91/5400	527	439	7210			
		1/80	13/1080	703	585	7400			
		* 1/100	11/1128	724	603	7400			
	50	1/100	25/2618	878	732	12500	P.207	P.212	-
		1/120	77/8993	1060	878	12500			
		* 1/160	33/5474	1230	1170	12500			
		* 1/200	30/5831	1230	1230	12500			
2.2 kW	40	1/5	7/36	67	56	2800	P.206	P.211	-
		1/10	7/72	133	111	4080			
		1/15	49/720	200	167	4580			
		1/20	7/144	266	221	5220			
		1/25	7/180	332	277	6110			
	50	1/30	5/154	399	332	9040	P.207	P.212	-
		1/40	399/15488	515	429	9420			
		1/50	399/20240	644	537	10000			
		1/60	49/2904	773	644	10000			
		1/80	49/3795	1029	858	10100			
		* 1/100	21/2116	1230	1080	10100			

GA Type S-Type Gearboxes (Type which Can be Equipped with Designated Motor)

[Notes]
- The motor power class value is the value when a 4 pole motor is used.
- When using an output shaft for a motor other than a 4 pole motor, the value obtained by multiplying the torque by the torque correction coefficient shown on page 626 shall be the allowable output shaft torque at the rotation.
- Allowable output shaft O.H.L. is the value at the middle of the output shaft.
- For the rotational direction of the output shaft, please refer to the figure shown below.
- The "*" mark indicates a limited torque type. Please make sure to check the allowable output shaft torque in the performance table.

■ Rotational Direction Relationship

The rotational direction shown below with arrow illustrates the rotation relationship between the output shaft / input shaft and is no way illustrating limitations in rotational direction.

Power	Reduction Ratio
0.4 kW	1/300 to 1/1200
0.75 kW	1/300 to 1/450
1.5 kW, 2.2 kW	1/30

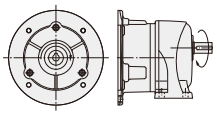

The input and output shafts rotate in the same direction.

Power	Reduction Ratio
2.2 kW	1/40 to 1/100

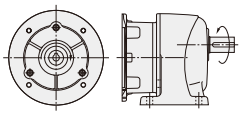

The input and output shafts rotate in the opposite directions.

4 Poles Motor Power Class	Frame Size	Reduction Ratio	Actual Reduction Ratio	Allowable Output Shaft Torque N·m		Allowable Output Shaft O.H.L.	Drawings		
				50 Hz	60 Hz	N	Foot Mount	Flange Mount	Small Flange Mount
0.4 kW	50	* 1/600	57/35360	1225	1044	9800	P.208	-	-
		* 1/750	25/19448	1225	1225	9800			
		* 1/900	5/4338	1225	1225	9800			
		* 1/1200	33/40664	1225	1225	9800			
0.75 kW	50	1/300	211/62013	1176	978	9800	P.208	-	-
		* 1/375	94/36103	1225	1225	9800			
		* 1/450	65/29167	1225	1225	9800			
1.5 kW	50	1/100	25/2618	878	732	12500	P.208	-	-
		1/120	77/8993	1060	878	12500			
		* 1/160	33/5474	1230	1170	12500			
		* 1/200	30/5831	1230	1230	12500			
2.2 kW	50	1/30	5/154	399	332	9040	P.208	-	-
		1/40	399/15488	515	429	9420			
		1/50	399/20240	644	537	10000			
		1/60	49/2904	773	644	10000			
		1/80	49/3795	1029	858	10100			
		* 1/100	21/2116	1230	1080	10100			

6-2. Drawings

G3 Type Parallel Shaft | Shaft Diameter **18** | **Foot** Mounting

<Figure 1>

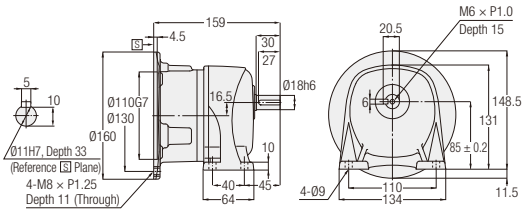

Power Class	Part Number	Reduction Ratio	Figure Number	Approx. Weight (kg)
0.1 kW	G3LS-18-***-010	5, 10, 15, 20, 25, 30, 40, 50	1	3.5
0.2 kW	G3LS-18-***-020	5, 10, 15, 20, 25	1	3.5

Note: A reduction ratio will be indicated as *** in the nomenclature.
Note: Please refer to page 200 for the performance table.
Note: Please refer to page 628 for the details of the motor mounting area.

G3 Type Parallel Shaft | Shaft Diameter **22** | **Foot** Mounting

<Figure 2>

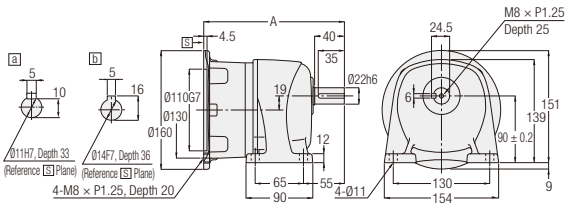

Power Class	Part Number	Reduction Ratio	Input Shaft	Figure Number	Approx. Weight (kg)	A	B
0.1 kW	G3LS-22-***-010	60, 80, 100, 120, 160, 200	a	2	4.5	185	11 (Through)
0.2 kW	G3LS-22-***-020	30, 40, 50, 60, 80, 100	a	2	4.5	185	11 (Through)
0.4 kW	G3LS-22-***-040	5, 10, 15, 20, 25	b	2	5	189.5	20

Note: A reduction ratio will be indicated as *** in the nomenclature.
Note: Please refer to page 200 for the performance table.
Note: Please refer to page 628 for the details of the motor mounting area.

G3 Type Parallel Shaft | Shaft Diameter 28 | Foot Mounting

<Figure 1>

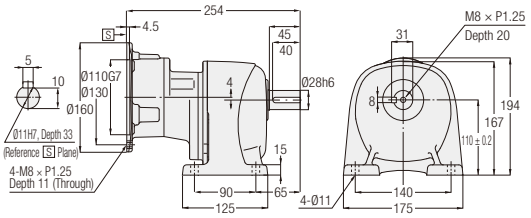

<Figure 2>

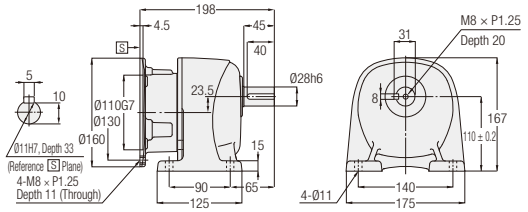

<Figure 3>

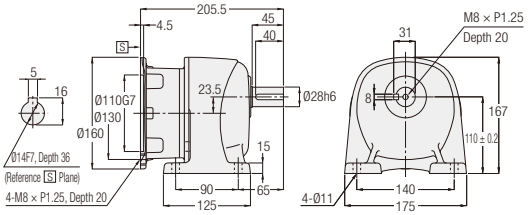

<Figure 4>

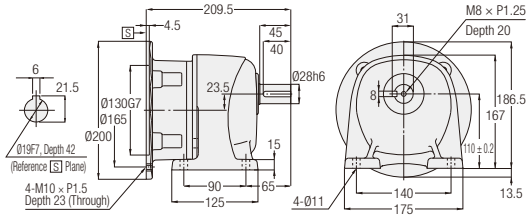

Power Class	Part Number	Reduction Ratio	Figure Number	Approx. Weight (kg)
0.1 kW	G3LS-28-***-010	300, 375, 450	1	7.5
0.2 kW	G3LS-28-***-020	100, 120, 160, 200	2	6.5
0.4 kW	G3LS-28-***-040	30, 40, 50, 60, 80, 100	3	7
0.75 kW	G3LS-28-***-075	5, 10, 15, 20, 25	4	6.5

Note: A reduction ratio will be indicated as *** in the nomenclature.
Note: Please refer to page 200 for the performance table.
Note: Please refer to page 628 for the details of the motor mounting area.

G3 Type Parallel Shaft | Shaft Diameter **32** | **Foot** Mounting

<Figure 1>

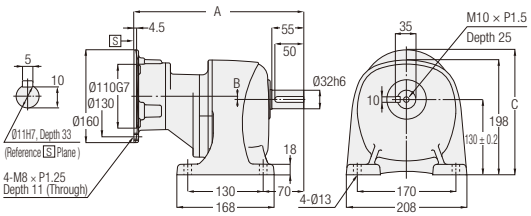

<Figure 2>

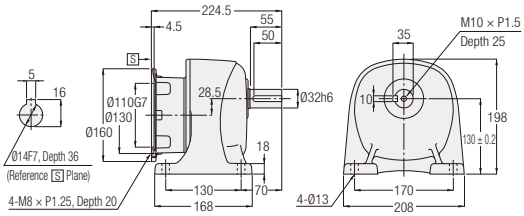

<Figure 3>

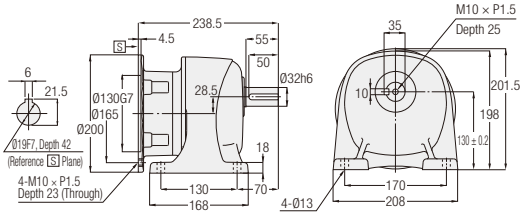

<Figure 4>

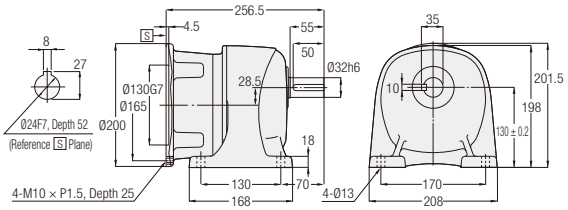

Power Class	Part Number	Reduction Ratio	Figure Number	Approx. Weight (kg)	A	B	C
0.1 kW	G3LS-32-✱✱✱-010	600, 750, 900, 1200	1	10.5	273	-1	209
0.2 kW	G3LS-32-✱✱✱-020	300, 375, 450	1	10.5	293	5.5	215.5
0.4 kW	G3LS-32-✱✱✱-040	100, 120, 160, 200	2	10	-	-	-
0.75 kW	G3LS-32-✱✱✱-075	30, 40, 50, 60, 80, 100	3	10	-	-	-
1.5 kW	G3LS-32-✱✱✱-150	5, 10, 15, 20, 25	4	11.5	-	-	-

Note: A reduction ratio will be indicated as ✱✱✱ in the nomenclature.
Note: Please refer to page 200 for the performance table.
Note: Please refer to page 628 for the details of the motor mounting area.

G3 Type Parallel Shaft | Shaft Diameter 40 | Foot Mounting

<Figure 1>

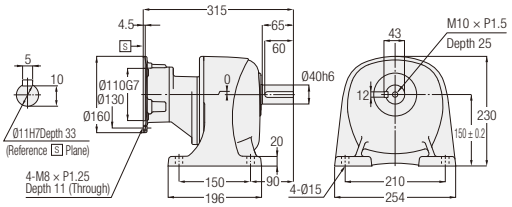

<Figure 2>

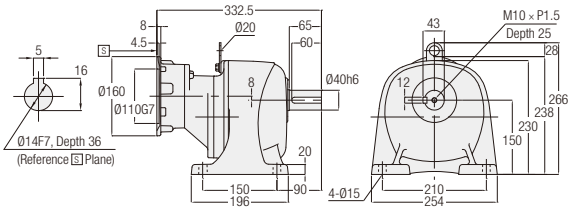

<Figure 3>

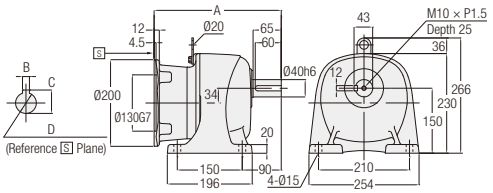

<Figure 4>

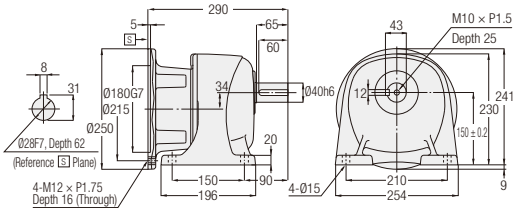

Note: Gearmotors with a motor power of 0.75 kW does not include the hanging plate.

Power Class	Part Number	Reduction Ratio	Figure Number	Approx. Weight (kg)	A	B	C	D
0.2 kW	G3LS-40-✱✱✱-020	600, 750, 900, 1200	1	17	-	-	-	-
0.4 kW	G3LS-40-✱✱✱-040	300, 375, 450	2	18.5	-	-	-	-
0.75 kW	G3LS-40-✱✱✱-075	100, 120, 160, 200	3	16.5	260.5	6	21.5	Ø19F7, Depth 42
1.5 kW	G3LS-40-✱✱✱-150	30, 40, 50, 60, 80, 100	3	18.5	293.5	8	27	Ø24F7, Depth 52
2.2 kW	G3LS-40-✱✱✱-220	5, 10, 15, 20, 25	4	18	-	-	-	-

Note: A reduction ratio will be indicated as ✱✱✱ in the nomenclature.
Note: Please refer to page 200 for the performance table.
Note: Please refer to page 628 for the details of the motor mounting area.

G3 Type Parallel Shaft | Shaft Diameter **50** | **Foot** Mounting

<Figure 1>

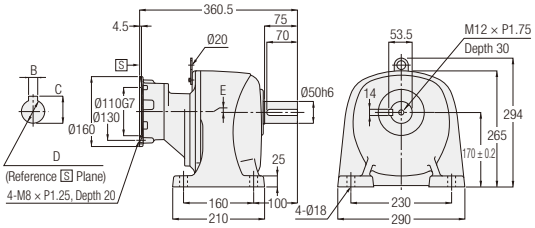

<Figure 2>

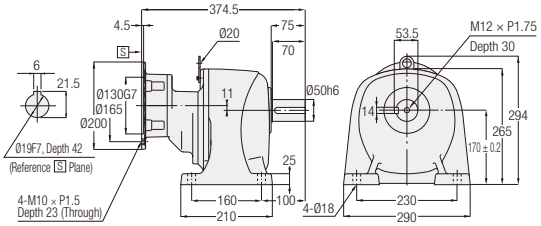

<Figure 3>

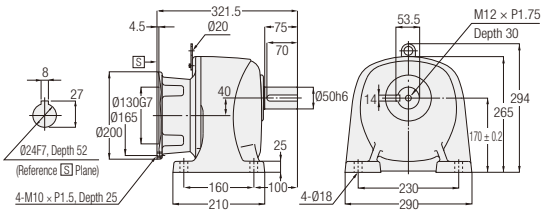

<Figure 4>

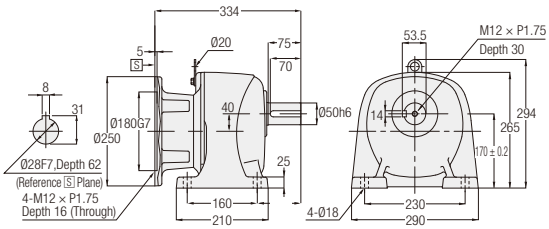

Power Class	Part Number	Reduction Ratio	Figure Number	Approx. Weight (kg)
0.4 kW	G3LS-50-***-040	600, 750, 900, 1200	1	48
0.75 kW	G3LS-50-***-075	300, 375, 450	2	48
1.5 kW	G3LS-50-***-150	100, 120, 160, 200	3	48
2.2 kW	G3LS-50-***-220	30, 40, 50, 60, 80, 100	4	48

Note: A reduction ratio will be indicated as *** in the nomenclature.
Note: Please refer to page 201 for the performance table.
Note: Please refer to page 628 for the details of the motor mounting area.

GA Type Parallel Shaft | Shaft Diameter 50 | Foot Mounting

<Figure 1>

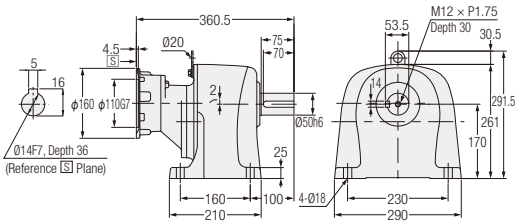

<Figure 2>

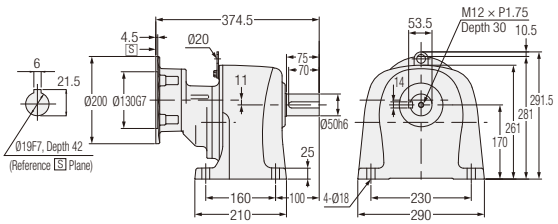

<Figure 3>

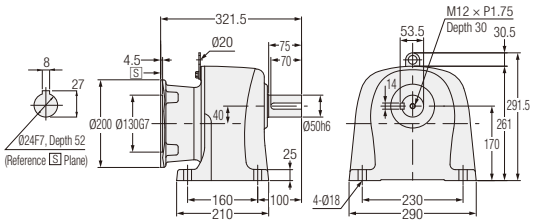

<Figure 4>

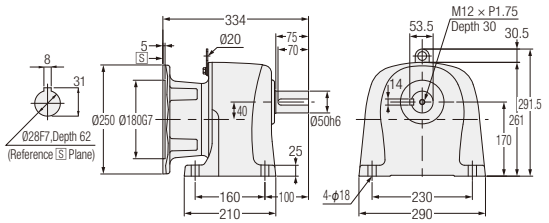

Power Class	Part Number	Reduction Ratio	Figure Number	Approx. Weight (kg)
0.4 kW	GALS-50-***-040	600, 750, 900, 1200	1	28.5
0.75 kW	GALS-50-***-075	300, 375, 450	2	28.5
1.5 kW	GALS-50-***-150	100, 120, 160, 200	3	28.5
2.2 kW	GALS-50-***-220	30, 40, 50, 60, 80, 100	4	28.5

Note: A reduction ratio will be indicated as *** in the nomenclature.
Note: Please refer to page 202 for the performance table.
Note: Please refer to page 628 for the details of the motor mounting area.

G3 Type Parallel Shaft | Shaft Diameter 18 | Flange Mounting

<Figure 1>

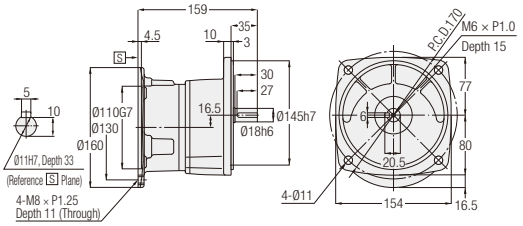

Power Class	Part Number	Reduction Ratio	Figure Number	Approx. Weight (kg)
0.1 kW	G3FS-18-***-010	5, 10, 15, 20, 25, 30, 40, 50	1	4
0.2 kW	G3FS-18-***-020	5, 10, 15, 20, 25	1	4

Note: A reduction ratio will be indicated as *** in the nomenclature.
Note: Please refer to page 200 for the performance table.
Note: Please refer to page 628 for the details of the motor mounting area.

G3 Type Parallel Shaft | Shaft Diameter 22 | Flange Mounting

<Figure 2>

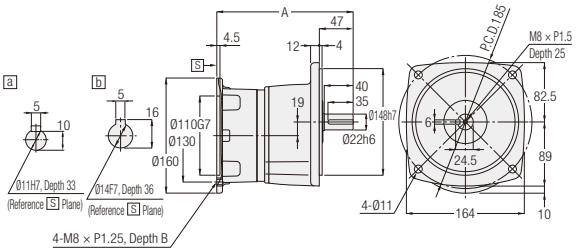

Power Class	Part Number	Reduction Ratio	Figure Number	Approx. Weight (kg)	Input Shaft	A	B
0.1 kW	G3FS-22-***-010	60, 80, 100, 120, 160, 200	2	5	a	185	11 (Through)
0.2 kW	G3FS-22-***-020	30, 40, 50, 60, 80, 100	2	5	a	185	11 (Through)
0.4 kW	G3FS-22-***-040	5, 10, 15, 20, 25	2	5.5	b	189.5	20

Note: A reduction ratio will be indicated as *** in the nomenclature.
Note: Please refer to page 200 for the performance table.
Note: Please refer to page 628 for the details of the motor mounting area.

G3 Type Parallel Shaft | Shaft Diameter 28 | Flange Mounting

<Figure 1>

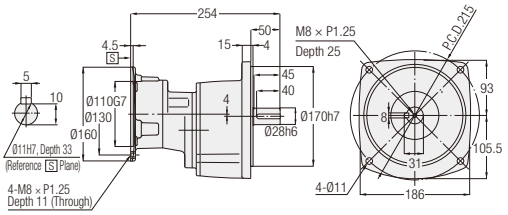

<Figure 2>

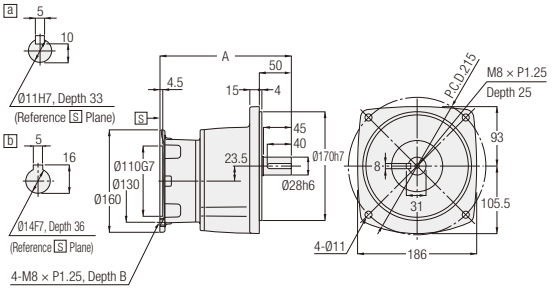

<Figure 3>

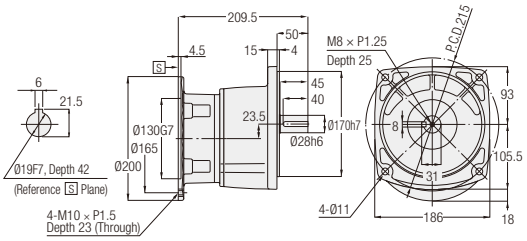

Power Class	Part Number	Reduction Ratio	Figure Number	Approx. Weight (kg)	Input Shaft	A	B
0.1 kW	G3FS-28-✱✱✱-010	300, 375, 450	1	8	-	-	-
0.2 kW	G3FS-28-✱✱✱-020	100, 120, 160, 200	2	7	a	198	11 (Through)
0.4 kW	G3FS-28-✱✱✱-040	30, 40, 50, 60, 80, 100	2	7.5	b	205.5	20
0.75 kW	G3FS-28-✱✱✱-075	5, 10, 15, 20, 25	3	7	-	-	-

Note: A reduction ratio will be indicated as ✱✱✱ in the nomenclature.
Note: Please refer to page 200 for the performance table.
Note: Please refer to page 628 for the details of the motor mounting area.

G3 Type Parallel Shaft | Shaft Diameter 32 | Flange Mounting

<Figure 1>

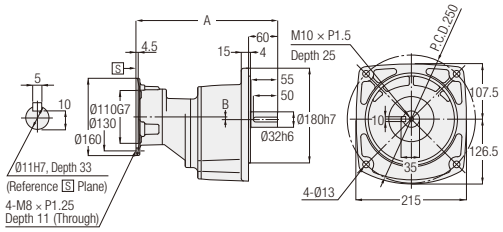

<Figure 2>

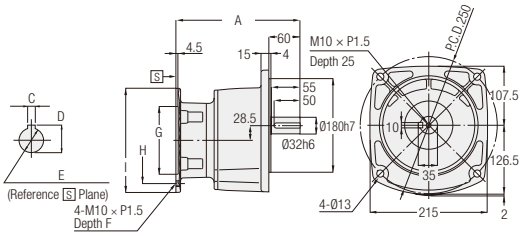

Power Class	Part Number	Reduction Ratio	Figure Number	Approx. Weight (kg)	A	B	C	D	E	F	G	H	I
0.1 kW	G3FS-32-✻✻✻-010	600, 750, 900, 1200	1	11	273	-1	-	-	-	-	-	-	-
0.2 kW	G3FS-32-✻✻✻-020	300, 375, 450	1	11	293	5.5	-	-	-	-	-	-	-
0.4 kW	G3FS-32-✻✻✻-040	100, 120, 160, 200	2	10.5	224.5	-	5	16	Ø14F7, Depth 36	20	Ø110G7	Ø130	Ø160
0.75 kW	G3FS-32-✻✻✻-075	30, 40, 50, 60, 80, 100	2	10.5	238.5	-	6	21.5	Ø19F7, Depth 42	23 (Through)	Ø130G7	Ø165	Ø200
1.5 kW	G3FS-32-✻✻✻-150	5, 10, 15, 20, 25	2	11	256.5	-	8	27	Ø24F7, Depth 52	25	Ø130G7	Ø165	Ø200

Note: A reduction ratio will be indicated as ✻✻✻ in the nomenclature.
Note: Please refer to page 200 for the performance table.
Note: Please refer to page 628 for the details of the motor mounting area.

G3 Type Parallel Shaft | Shaft Diameter 40 | Flange Mounting

<Figure 3>

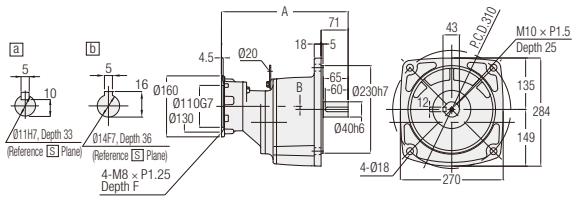

<Figure 4>

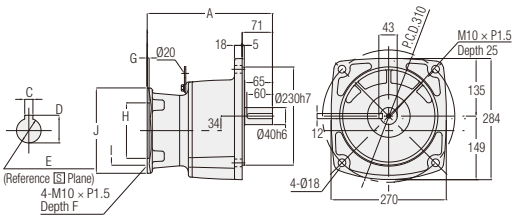

Note: Gearmotors with a motor power of 0.2 kW or 0.75 kW does not include the hanging plate.

Power Class	Part Number	Reduction Ratio	Figure Number	Approx. Weight (kg)	Input Shaft	A	B	C	D	E	F	G	H	I	J
0.2 kW	G3FS-40-✻✻✻-020	600, 750, 900, 1200	3	18.5	a	315	0	-	-	-	11 (Through)	-	-	-	-
0.4 kW	G3FS-40-✻✻✻-040	300, 375, 450	3	20	b	332.5	8	20	-	-	-	-	-	-	-
0.75 kW	G3FS-40-✻✻✻-075	100, 120, 160, 200	4	18	-	260.5	-	6	21.5	Ø19F7, Depth 42	23 (Through)	4.5	Ø130G7	Ø165	Ø200
1.5 kW	G3FS-40-✻✻✻-150	30, 40, 50, 60, 80, 100	4	20	-	293.5	-	8	27	Ø24F7, Depth 52	25	4.5	Ø130G7	Ø165	Ø200
2.2 kW	G3FS-40-✻✻✻-220	5, 10, 15, 20, 25	4	19.5	-	290	-	8	31	Ø28F7, Depth 62	16 (Through)	5	Ø130G7	Ø215	Ø250

Note: A reduction ratio will be indicated as ✻✻✻ in the nomenclature.
Note: Please refer to page 200 for the performance table.
Note: Please refer to page 628 for the details of the motor mounting area.

G3 Type Parallel Shaft | Shaft Diameter 50 | Flange Mounting

<Figure 1>

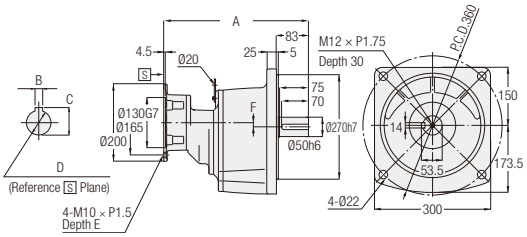

<Figure 2>

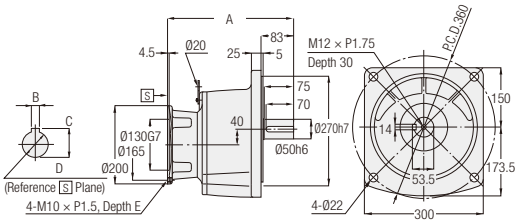

Power Class	Part Number	Reduction Ratio	Figure Number	Approx. Weight (kg)	A	B	C	D	E	F
0.4 kW	G3FS-50-✱✱✱-040	600, 750, 900, 1200	1	53	360.5	5	16	Ø14F7, Depth 36	20	2
0.75 kW	G3FS-50-✱✱✱-075	300, 375, 450	1	53	374.5	6	21.5	Ø19F7, Depth 42	23 (Through)	11
1.5 kW	G3FS-50-✱✱✱-150	100, 120, 160, 200	2	53	321.5	8	27	Ø24F7, Depth 52	25	-
2.2 kW	G3FS-50-✱✱✱-220	30, 40, 50, 60, 80, 100	2	53	334	8	31	Ø28F7, Depth 62	16 (Through)	-

Note: A reduction ratio will be indicated as ✱✱✱ in the nomenclature.
Note: Please refer to page 201 for the performance table.
Note: Please refer to page 628 for the details of the motor mounting area.

G3 Type Parallel Shaft | Shaft Diameter 18 | Small Flange Mounting

<Figure 3>

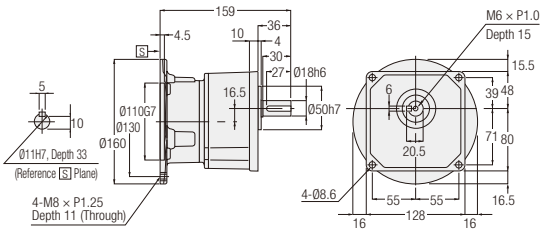

Power Class	Part Number	Reduction Ratio	Figure Number	Approx. Weight (kg)
0.1 kW	G3KS-18-✱✱✱-010	5, 10, 15, 20, 25, 30, 40, 50	3	4
0.2 kW	G3KS-18-✱✱✱-020	5, 10, 15, 20, 25	3	4

Note: A reduction ratio will be indicated as ✱✱✱ in the nomenclature.
Note: Please refer to page 200 for the performance table.
Note: Please refer to page 628 for the details of the motor mounting area.

G3 Type Parallel Shaft | Shaft Diameter **22** | **Small Flange** Mounting

<Figure 1>

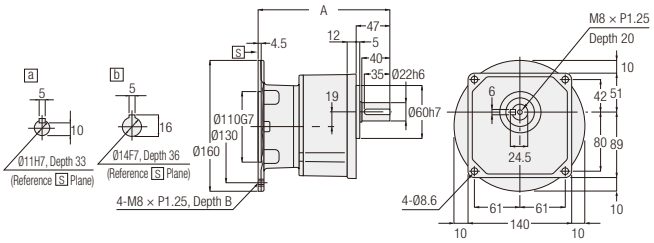

Power Class	Part Number	Reduction Ratio	Figure Number	Approx. Weight (kg)	Input Shaft	A	B
0.1 kW	G3KS-22-∗∗∗-010	60, 80, 100, 120, 160, 200	1	5	a	185	11 (Through)
0.2 kW	G3KS-22-∗∗∗-020	30, 40, 50, 60, 80, 100	1	5	a	185	11 (Through)
0.4 kW	G3KS-22-∗∗∗-040	5, 10, 15, 20, 25	1	5.5	b	189.5	20

Note: A reduction ratio will be indicated as ∗∗∗ in the nomenclature.
Note: Please refer to page 200 for the performance table.
Note: Please refer to page 628 for the details of the motor mounting area.

G3 Type Parallel Shaft | Shaft Diameter 28 | Small Flange Mounting

<Figure 1>

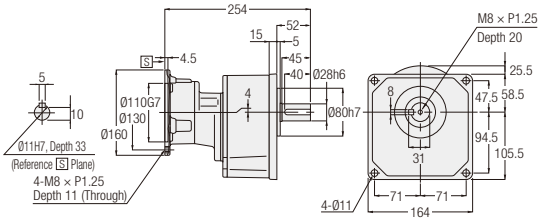

<Figure 2>

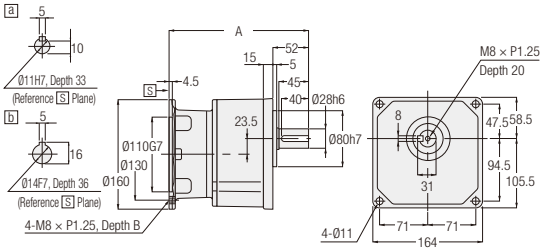

<Figure 3>

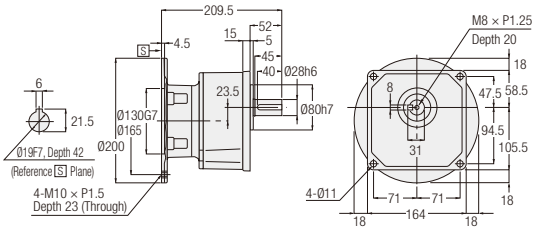

Power Class	Part Number	Reduction Ratio	Figure Number	Approx. Weight (kg)	Input Shaft	A	B
0.1 kW	G3KS-28-***-010	300, 375, 450	1	8	-	-	-
0.2 kW	G3KS-28-***-020	100, 120, 160, 200	2	7	a	198	11 (Through)
0.4 kW	G3KS-28-***-040	30, 40, 50, 60, 80, 100	2	7.5	b	205.5	20
0.75 kW	G3KS-28-***-075	5, 10, 15, 20, 25	3	7	-	-	-

Note: A reduction ratio will be indicated as *** in the nomenclature.
Note: Please refer to page 200 for the performance table.
Note: Please refer to page 628 for the details of the motor mounting area.

G3 Type Parallel Shaft | Shaft Diameter **32** | **Small Flange** Mounting

<Figure 1>

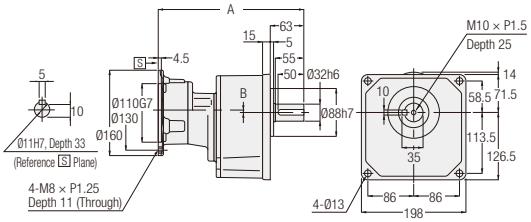

<Figure 2>

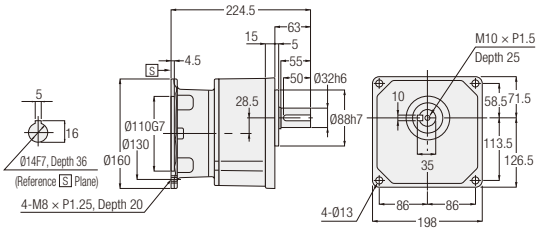

<Figure 3>

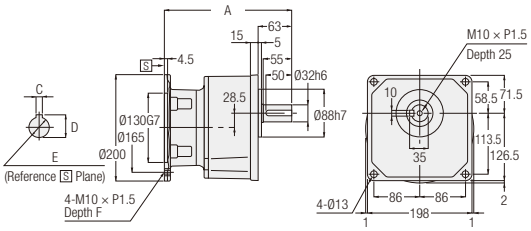

Power Class	Part Number	Reduction Ratio	Figure Number	Approx. Weight (kg)	A	B	C	D	E	F
0.1 kW	G3KS-32-***-010	600, 750, 900, 1200	1	11	273	-1	-	-	-	-
0.2 kW	G3KS-32-***-020	300, 375, 450	1	11	293	5.5	-	-	-	-
0.4 kW	G3KS-32-***-040	100, 120, 160, 200	2	10.5	-	-	-	-	-	-
0.75 kW	G3KS-32-***-075	30, 40, 50, 60, 80, 100	3	10.5	238.5	-	6	21.5	Ø19F7, Depth 42	23 (Through)
1.5 kW	G3KS-32-***-150	5, 10, 15, 20, 25	3	12	256.5	-	8	27	Ø24F7, Depth 52	25

Note: A reduction ratio will be indicated as *** in the nomenclature.
Note: Please refer to page 200 for the performance table.
Note: Please refer to page 628 for the details of the motor mounting area.

MEMO

H/H2 Type

Right Angle Shaft

Standard Specification
Model and Type Codes
Standard Model Lineup

INDUCTION GEARMOTORS

P.242 **1. Gearmotors/Gearmotors with Brake**
- **1-1. Motor Characteristics Table**
- **1-2. Performance Table**
- **1-3. Drawings**

P.276 **2. IP65 Gearmotors/ IP65 Gearmotors with Brake**
- **2-1. Motor Characteristics Table**
- **2-2. Performance Table**
- **2-3. Drawings**

P.294 **3. Gearmotors with Clutch/Brake**
- **3-1. Motor Characteristics Table**
- **3-2. Performance Table**
- **3-3. Drawings**

P.300 **4. Speed Control Gearmotors**
- **4-1. Properties and Motor Characteristics Table**
- **4-2. Graph for Speed Characteristics**
- **4-3. Performance Table**
- **4-4. Drawings**

P.314 **5. Gearboxes (Double Shaft Type)**
- **5-1. Performance Table**
- **5-2. Drawings**

P.322 **6. S-Type Gearboxes (Type That Can Be Equipped with Designated Motor)**
- **6-1. Performance Table**
- **6-2. Drawings**



Standard Specification

H Type Gearmotors/Gearmotors with Brake

Series		MINI	
Motor Unit	Number of Phases	3-Phase	1-Phase
	Power	15 W to 90 W	
	Power Supply	Standard Voltage 200 V/50 Hz, 200 V/60 Hz, 220 V/60 Hz High Voltage (400 V Class) 380 V/50 Hz, 400 V/50 Hz, 400 V/60 Hz, 440 V/60 Hz	Standard Voltage 100 V/50 Hz, 100 V/60 Hz High Voltage (200 V Class) 200 V/50 Hz, 200 V/60 Hz
	Insulation Class	Ins. B	
	Startup Method	Direct Power Input	Capacitor Run
	Cooling Method	Totally Enclosed Non-Ventilated (TENV) (IC410) or Totally Enclosed Fan Cooled (TEFC) (IC411)	
	Number of Motor Poles	4	
	Rating	Continuous	
Gearbox	Reduction Type	Hypoid Gear and Helical Gear	
	Lubrication Type	Grease Lubrication (Maintenance-free)	
	Output Shaft	JIS Key (JIS B 1301-1996 plain form) * The key is included.	
	Output Shaft Material	Carbon Steel	
	Case Material	Aluminum	
Ambient Conditions	Ambient Temperature	-10 °C to 40 °C	
	Ambient Humidity	85 % max (No Condensation)	
	Altitude	1,000 m max	
	Installation Environment	A place free from corrosive gas, explosive gas, and/or vapor. Well ventilated place with no dust.	
	Installation Place	Indoors	
Paint	Paint Color	Gray	
Mounting Direction		No limitations to mounting angle	
Motor Characteristics Table		P.242	P.243
Performance Table		P.246	P.246
Drawings		P.254	P.254

H2 Type Gearmotors/Gearmotors with Brake

Series		MID				
Motor Unit	Number of Phases	3-Phase				1-Phase
	Power	0.1 kW to 2.2 kW				0.1 kW to 0.4 kW
	Power Supply	Type	Global Standards Conformance	Power Supply/Frequency		Standard Voltage 100 V/50 Hz, 100 V/60 Hz High Voltage (200 V Class) 200 V/50 Hz, 200 V/60 Hz
		Standard Voltage	UL/CE/CCC	200 V/50 Hz, 200 V/60 Hz, 220 V/60 Hz		
		High Voltage (400 V Class)	UL/CE/CCC	380 V/50 Hz, 400 V/50 Hz, 400 V/60 Hz, 440 V/60 Hz		
		Special Voltage	South Korea/ Taiwan UL/CE/CCC	220 V/60 Hz, 380 V/60 Hz (Dual Voltage)		
			China UL/CE/CCC	220 V/50 Hz, 230 V/50 Hz, 380 V/50 Hz (Dual Voltage)		
			China/South Korea/Taiwan UL/CE/CCC	220 V/ 50Hz, 220 V/60 Hz, 380 V/50 Hz, 380 V/60 Hz (Dual Voltage) (Note 1)		
			Europe/North America UL/cUL/CE/CCC	415 V/50 Hz, 440 V/50 Hz, 480 V/60 Hz		
			North America/ Europe UL/cUL/CE/CCC	230 V/60 Hz, 460 V/60 Hz, 400 V/50 Hz (Dual Voltage) (Note 2)		
			North America/ Europe UL/cUL/CE/CCC	208 V/60 Hz, 230 V/60 Hz, 460 V/60 Hz, 400 V/50 Hz (Note 3)		
			Canada UL/cUL	575 V/60 Hz		
	Insulation Class	Ins. F				Ins. B
	Startup Method	Direct Power Input				Capacitor Start (0.1 kW: Capacitor Run)
	Cooling Method	Totally Enclosed Fan Cooled (TEFC) (IC411) (All of 0.1 kW and 0.2 kW models without brake are totally enclosed non-ventilated (TENV) (IC410))				Totally Enclosed Fan Cooled (TEFC) (IC411)
	Number of Motor Poles	4				
	Rating	Power	Motor Efficiency	UL/CE Standard	CCC Standard	Continuous
		0.1 kW	IE1	Continuous	Continuous	
		0.2 kW, 0.4 kW (Note 4)	IE2	Continuous	Short Time (120 minutes)	
		0.75 kW or above	IE3, GB3	Continuous	Continuous	
Gearbox	Reduction Type	Hypoid Gear and Helical Gear				
	Lubrication Type	Grease Lubrication (Maintenance-free)				
	Output Shaft	JIS Key (JIS B 1301-1996 plain form) * The key is included.				
	Output Shaft Material	Carbon Steel				
	Case Material	Aluminum (Frame Size 50: Cast Iron, 1.5 kW Frame Size 40: Aluminum Casting)				Aluminum (Frame size 50 is made of cast iron.)
Ambient Conditions	Ambient Temperature	-10 °C to 40 °C (Note 5)				
	Ambient Humidity	85 % max (No Condensation)				
	Altitude	1,000 m max				
	Installation Environment	A well ventilated place free from corrosive gas, explosive gas, vapor and/or chemicals Not to be exposed to direct rain. Not to be exposed to direct sunlight. The brake should not to be exposed to water, dust, oil/grease, or oil mist. Models with water protection rating IPX0 shall not be exposed directly to water.				
Paint	Paint Color	Gray				
Protective Structure (Note 6)		IP44 or IP40				IP40 or IP44
Mounting Direction		No limitations to mounting angle				
Motor Characteristics Table		P.244				P.245
Performance Table		P.249				P.252
Drawings		P.257				P.258

Note 1: Applicable motor power is 0.1 kW to 0.75 kW.
Note 2: Applicable motor power is 0.75 kW to 2.2 kW.
Note 3: Applicable motor power is 0.1 kW to 0.4 kW.
Note 4: For CCC Standard, Three-phase 0.2 kW and Three-phase 0.4 kW are certified under limited duty cycle. Please be cautious upon selecting this product.
Note 5: The ambient temperature for Single-phase motors with a power of 0.1 kW (capacitor run) is 0 °C to 40 °C.
Note 6: The protective structure differs depending on the model.

H/H2 Type IP65 Gearmotors/IP65 Gearmotors with Brake

Series		MINI		MID			
Motor Unit	Number of Phases	3-Phase	1-Phase	3-Phase			
	Power	15 W to 90 W	15 W to 40 W	0.1 kW to 2.2 kW			
	Power Supply	Standard Voltage 200 V/50 Hz, 200 V/60 Hz, 220 V/60 Hz High Voltage (400 V Class) 380 V/50 Hz, 400 V/50 Hz, 400 V/60 Hz, 440 V/60 Hz	Standard Voltage 100 V/50 Hz, 100 V/60 Hz	Type	Global Standards Conformance	Power Supply/ Frequency	
				Standard Voltage	UL/CE/CCC	200 V/50 Hz, 200 V/60 Hz, 220 V/60 Hz	
				High Voltage (400 V Class)	UL/CE/CCC	380 V/50 Hz, 400 V/50 Hz, 400 V/60 Hz, 440 V/60 Hz	
				Special Voltage	South Korea/ Taiwan UL/CE/CCC	220 V/60 Hz, 380 V/60 Hz (Dual Voltage)	
					China UL/CE/CCC	220 V/50 Hz, 230 V/50 Hz, 380 V/50 Hz (Dual Voltage)	
					China/South Korea/Taiwan UL/CE/CCC	220 V/50 Hz, 220 V/60 Hz, 380 V/50 Hz, 380 V/60 Hz (Dual Voltage) (Note 1)	
					Europe/North America UL/cUL/CE/CCC	415 V/50 Hz, 440 V/50 Hz, 480 V/60 Hz	
					North America/ Europe UL/cUL/CE/CCC	230 V/60 Hz, 460 V/60 Hz, 400 V/50 Hz (Dual Voltage) (Note 2)	
					North America/ Europe UL/cUL/CE/CCC	208 V/60 Hz, 230 V/60 Hz, 460 V/60 Hz, 400 V/50 Hz (Note 3)	
					Canada UL/cUL	575 V/60 Hz	
	Insulation Class	Ins. B		Ins. F			
	Startup Method	Direct Power Input	Capacitor Run	Direct Power Input			
	Cooling Method	Totally Enclosed Non-Ventilated (TENV) (IC410)		Totally Enclosed Fan Cooled (TEFC) (IC411) (All of 0.1 kW and 0.2 kW models without brake are totally enclosed non-ventilated (TENV) (IC410))			
	Number of Motor Poles	4					
	Rating	Continuous		Power	Motor Efficiency	UL/CE Standard	CCC Standard
				0.1 kW	IE1	Continuous	Continuous
				0.2 kW, 0.4 kW (Note 4)	IE2	Continuous	Short Time (120 minutes)
				0.75 kW or above	IE3, GB3	Continuous	Continuous
Gearbox	Reduction Type	Hypoid Gear and Helical Gear					
	Lubrication Type	Grease Lubrication (Maintenance-free)					
	Output Shaft	JIS Key (JIS B 1301-1996 plain form) * The key is included.					
	Output Shaft Material	Stainless Steel		Stainless steel or carbon steel			
	Case Material	Aluminum		Aluminum (Frame Size 50: Cast Iron, 1.5 kW Frame Size 40: Aluminum Casting)			
Ambient Conditions	Ambient Temperature	-10 °C to 40 °C					
	Ambient Humidity	100 % max (No Condensation)					
	Altitude	1,000 m max					
	Installation Environment	A place free from corrosive gas, explosive gas, and/or vapor Not to be exposed to strong rain and wind. Not to be exposed to direct sunlight. Not to be used underwater, environments with exposure to high pressure water splashes, and exposure to cleansing chemicals.					
Paint	Paint Color	Gray					
Protective Structure		IP65					
Mounting Direction		No limitations to mounting angle					
Motor Characteristics Table		P.276		P.277			
Performance Table		P.278		P.280			
Drawings		P.283		P.285			

Note 1: Applicable motor power is 0.1 kW to 0.75 kW.
Note 2: Applicable motor power is 0.75 kW to 2.2 kW.
Note 3: Applicable motor power is 0.1 kW to 0.4 kW.
Note 4: For CCC Standard, Three-phase 0.2 kW and Three-phase 0.4 kW are certified under limited duty cycle. Please be cautious upon selecting this product.

H2 Type Gearmotors with Clutch/Brake

Series		MID
Motor Unit	Number of Phases	3-Phase
	Power	0.2 kW to 0.75 kW
	Power Supply	Standard Voltage 200 V/50 Hz, 200 V/60 Hz, 220 V/60 Hz High Voltage (400 V Class) 380 V/50 Hz, 400 V/50 Hz, 400 V/60 Hz, 440 V/60 Hz
	Insulation Class	Ins. F
	Startup Method	Direct Power Input
	Cooling Method	Totally Enclosed Fan Cooled (TEFC) (IC411) (0.2 kW model: totally enclosed non-ventilated (TENV) (IC410))
	Number of Motor Poles	4
	Rating	Continuous
Gearbox	Reduction Type	Hypoid Gear and Helical Gear
	Lubrication Type	Grease Lubrication (Maintenance-free)
	Output Shaft	JIS Key (JIS B 1301-1996 plain form) * The key is included.
	Output Shaft Material	Carbon Steel
	Case Material	Aluminum
Ambient Conditions	Ambient Temperature	-10 °C to 40 °C
	Ambient Humidity	85 % max (No Condensation)
	Altitude	1,000 m max
	Installation Environment	A place free from corrosive gas, explosive gas, and/or vapor. Well ventilated place with no dust.
	Installation Place	Indoors
Paint	Paint Color	Gray
Mounting Direction		No limitations to mounting angle
Motor Characteristics Table		P.294
Performance Table		P.295
Drawings		P.296

H Type Speed Control Gearmotors

Series		MINI
Motor Unit	Number of Phases	1-Phase
	Power	15 W to 90 W
	Power Supply	Standard Voltage 100 V/50 Hz, 100 V/60 Hz High Voltage (200 V Class) 200 V/50 Hz, 200 V/60 Hz
	Insulation Class	Ins. B
	Startup Method	Capacitor Run
	Cooling Method	Totally Enclosed Non-Ventilated (TENV) (IC410) (60 to 90 W: provided with a forced fan)
	Number of Motor Poles	4
	Rating	Continuous
Gearbox	Reduction Type	Hypoid Gear and Helical Gear
	Lubrication Type	Grease Lubrication (Maintenance-free)
	Output Shaft	JIS Key (JIS B 1301-1996 plain form) * The key is included.
	Output Shaft Material	Carbon Steel
	Case Material	Aluminum
Ambient Conditions	Ambient Temperature	-10 °C to 40 °C
	Ambient Humidity	85 % max (No Condensation)
	Altitude	1,000 m max
	Installation Environment	A place free from corrosive gas, explosive gas, and/or vapor. Well ventilated place with no dust.
	Installation Place	Indoors
Paint	Paint Color	Gray
Mounting Direction		No limitations to mounting angle
Motor Characteristics Table		P.300
Performance Table		P.302
Drawings		P.305

H2 Type Gearboxes (Double Shaft Type)

Series		MID
4 Poles Motor Power Class		0.2 kW Class to 2.2 kW Class
Gearbox	Reduction Type	Hypoid Gear and Helical Gear
	Lubrication Type	Grease Lubrication (Maintenance-free)
	Output Shaft	JIS Key (JIS B 1301-1996 plain form) * The key is included.
	Input Shaft	JIS Key (JIS B 1301-1996 plain form) * The key is included.
	Output Shaft Material	Carbon Steel
	Input Shaft Material	Carbon Steel
	Case Material	Aluminum (Frame Size 50: Cast Iron, 1.5 kW Frame Size 40: Aluminum Casting)
Ambient Conditions	Ambient Temperature	-10 °C to 40 °C
	Ambient Humidity	85 % max (No Condensation)
	Altitude	1,000 m max
	Installation Environment	A place free from corrosive gas, explosive gas, and/or vapor. Well ventilated place with no dust.
	Installation Place	Indoors
Paint	Paint Color	Gray
Mounting Direction		No limitations to mounting angle
Performance Table		P.314
Drawings		P.317

H2 Type S-Type Gearboxes

Series		MID
4 Poles Motor Power Class		0.2 kW Class to 2.2 kW Class
Gearbox	Reduction Type	Hypoid Gear and Helical Gear
	Lubrication Type	Grease Lubrication (Maintenance-free)
	Output Shaft	JIS Key (JIS B 1301-1996 plain form) * The key is included.
	Output Shaft Material	Carbon Steel
	Case Material	Aluminum (Frame Size 50: Cast Iron, 1.5 kW Frame Size 40: Aluminum Casting)
Ambient Conditions	Ambient Temperature	-10 °C to 40 °C
	Ambient Humidity	85 % max (No Condensation)
	Altitude	1,000 m max
	Installation Environment	A place free from corrosive gas, explosive gas, and/or vapor. Well ventilated place with no dust.
	Installation Place	Indoors
Paint	Paint Color	Gray
Mounting Direction		No limitations to mounting angle
Performance Table		P.322
Drawings		P.325

Model and Type Codes

Standard Specification Model and Type Codes

H Type Gearmotors/Gearmotors with Brake MINI Series

Mounting Type	Motor Type		Frame Size	Shaft Arrangement		Reduction Ratio		Motor Power	Supply Voltage	Terminal Box	Option	Option Code
HL	M	–	15	L	–	30	–	T25	W	K		
HF	MN	–	22	T	–	450	–	S40		C	X	T6
①	②		③	④		⑤		⑥	⑦	⑧	⑨	⑩

①Mounting Type	HL : Right Angle Shaft Foot Mount		
	HF : Right Angle Shaft Flange Mount (up to frame sizes 22)		
②Motor Type	M : With Motor		
	MN : With Brakemotor		
	MR : Motor with Simple Brake (Option)		
③Frame Size and Output Shaft Diameter	Output Shaft Diameter		
④Shaft Arrangement	Output shaft on the left side when viewed from the input shaft side 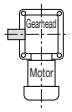	Output shaft on the right side when viewed from the input shaft side 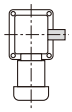	Output shaft on both sides when viewed from the input shaft side 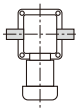
	L	R	T
⑤Reduction Ratio	10: 1/10 to 1800: 1/1800		
⑥Motor Power	T15 : 3-Phase 15 W		
	T25 : 3-Phase 25 W		
	T40 : 3-Phase 40 W		
	T60 : 3-Phase 60 W		
	T90 : 3-Phase 90 W		
	S15 : 1-Phase 15 W		
	S25 : 1-Phase 25 W		
	S40 : 1-Phase 40 W		
	S60 : 1-Phase 60 W		
	S90 : 1-Phase 90 W		
⑦Supply Voltage (High Voltage: Option)	Blank : Standard Voltage 3-Phase: 200 V/50 Hz, 200 V/60 Hz, 220 V/60 Hz 1-Phase: 100 V/50 Hz, 100 V/60 Hz		
	W : High Voltage 3-Phase: 380 V/50 Hz, 400 V/50 Hz, 400 V/60 Hz, 440 V/60 Hz 1-Phase: 200 V/50 Hz, 200 V/60 Hz		
⑧Terminal Box (Option) (Note 1)	Blank : Flying Leads (Standard Type)		
	T : T Type Terminal Box		
	K : K Type Terminal Box		
	C : Terminal Box with Built-in Rectifier for Gearmotor with Brake		
⑨Option	Blank : Standard Specification		
	X : Special Specification Code		
⑩Option Code (Note 2)	Lead Wires/Terminal Box Position Code Please refer to the list of option codes on page 581 for details.		

Note 1: When using an inverter for a C type terminal box, be sure to designate an AC switching (A) connection.
Please refer to page 591 for details.
Note 2: The option code will not be shown in the nomenclature on the nameplate. But it will be shown in the Option code row of the nameplate.

H2 Type Gearmotors/Gearmotors with Brake MID Series [3-Phase]

Gearhead Type					Motor Type							Brake Specifications	Option	
Mounting Type	Frame Size	Shaft Arrangement	Reduction Ratio		Motor Series	Motor Specifications	Motor Power	Number of Phases	Supply Voltage	Standards	Terminal Box	Brake	Option	Option Code
H2F	22	L	5	–	M	M	01	T	N	N	T	N		
H2L	32	R	15	–	M	R	08	T	W	N	T	B4	X	AA
H2L	50	T	120	–	M	R	15	T	K	N	T	B2	X	T9HZ
①	②	③	④		⑤	⑥	⑦	⑧	⑨	⑩	⑪	⑫	⑬	⑭

①Mounting Type	H2L : Right Angle Shaft Foot Mount		
	H2F : Right Angle Shaft Flange Mount		
②Frame Size and Output Shaft Diameter	Output Shaft Diameter		
③Shaft Arrangement	Viewing from the input Shaft (↑), the Output shaft would be on the left side 	Viewing from the input Shaft (↑), the Output shaft would be on the right side 	Viewing from the input Shaft(↑), the Output shaft would be on the both sides 
	L	R	T
④Reduction Ratio	5: 1/5 to 15X: 1/1500		
⑤Motor Type	M : Standard Induction Motor (IP40 or IP44)		
⑥Motor Specifications (Note 1)	M : IE1 Efficiency Ins. F (0.1 kW) IE2 Efficiency Ins. F (0.2 kW to 0.4 kW)		
	R : IE3 Efficiency Ins. F (0.75 kW to 2.2 kW)		
⑦Motor Power	01 : 0.1 kW		
	02 : 0.2 kW		
	04 : 0.4 kW		
	08 : 0.75 kW		
	15 : 1.5 kW		
	22 : 2.2 kW		
⑧Number of Phases	T : 3-Phase		

⑨Supply Voltage (Note 2)	⑫Brake Specifications (Note 3)				
	N	B2	B4	J2	J4
N : 200 V/50 Hz, 200 V/60 Hz, 220 V/60 Hz	○	○		○	
W : 380 V/50 Hz, 400 V/50 Hz, 400 V/60 Hz, 440 V/60 Hz	○		○		○
K : 220 V/60 Hz, 380 V/60 Hz	○	○	○	○	○
C : 220 V/50 Hz, 230 V/50 Hz, 380 V/50 Hz	○	○	○	○	○
D : 220 V/50 Hz, 220 V/60 Hz, 380 V/50 Hz, 380 V/60 Hz	○	○	○	○	○
E : 415 V/50 Hz, 440 V/50 Hz, 480 V/60 Hz	○		○		○
U : 230 V/60 Hz, 460 V/60 Hz, 400 V/50 Hz	○	○	○	○	○
A : 208 V/60 Hz, 230 V/60 Hz, 460 V/60 Hz, 400 V/50 Hz	○	○	○	○	○
M : 575 V/60 Hz	○	○		○	

⑩Standards	N : UL/CE/CCC	
	A : UL*Supply Voltage: M (575 V/60 Hz) only	
⑪Terminal Box (Note 4)	T : T Type Terminal Box (Steel Plate)	
	N : Flying Leads	
⑫Brake Specifications	N : No Brake	
	B2 : 200 V Class Brake	
	B4 : 400 V Class Brake	
	J2 : 200 V Class Brake with Manual Brake Release Lever (Optional)	
	J4 : 400 V Class Brake with Manual Brake Release Lever (Optional)	
⑬Option	Blank : Standard Specification	
	X : Special Specification Code	
⑭Option Code (Note 5)	Built-in Rectifier Connection Code For details, please refer to the list of option codes on page 561.	
	Terminal Box Position Code For details, please refer to the list of option codes on page 582.	
	For other option codes, please refer to the list of option codes on page 1012.	

Note 1: For CCC Standard, Three-phase 0.2 kW and Three-phase 0.4 kW are certified under limited duty cycle. Please be cautious upon selecting the product.
Note 2: Refer to the following for the corresponding motor powers for supply voltages.
Supply voltage D: 0.1 kW to 0.75 kW Supply voltage U: 0.75 kW to 2.2 kW Supply voltage A: 0.1 kW to 0.4 kW
Dual voltage is not available for gearmotors with brake and supply the voltage code “K”, “C”, “D”, “U” and “A”.
The motor voltage is limited by the brake specifications.
Note 3: ○ indicates a brake specification that can be manufactured.
Note 4: With regard to the types of flying leads, only supply voltage codes N are covered.
Note 5: The option code will not be shown in the nomenclature on the nameplate. But it will be shown in the Option code row of the nameplate.

H2 Type Gearmotors/Gearmotors with Brake MID Series [1-Phase]

Gearhead Type					Motor Type							Brake Specifications	Option	
Mounting Type	Frame Size	Shaft Arrangement	Reduction Ratio		Motor Type	Motor Specifications	Motor Power	Number of Phases	Supply Voltage	Standards	Terminal Box	Brake	Option	Option Code
H2F	22	L	50	–	M	M	01	S	N	J	A	N		
H2L	28	R	100	–	M	M	02	C	W	J	A	B2		
H2L	40	T	375	–	M	M	04	C	N	J	A	B2	X	T9HZ
①	②	③	④		⑤	⑥	⑦	⑧	⑨	⑩	⑪	⑫	⑬	⑭

①Mounting Type	H2L : Right Angle Shaft Foot Mount		
	H2F : Right Angle Shaft Flange Mount (only frame size 22)		
②Frame Size and Output Shaft Diameter	Output Shaft Diameter		
③Shaft Arrangement	Viewing from the input Shaft (↑), the Output shaft would be on the left side 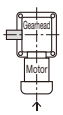	Viewing from the input Shaft (↑), the Output shaft would be on the right side 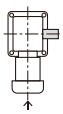	Viewing from the input Shaft(↑), the Output shaft would be on the both sides 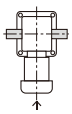
	L	R	T
④Reduction Ratio	5: 1/5 to 15X: 1/1500		
⑤Motor Type	M : Induction Standard (IP44 or IP40)		
⑥Motor Specifications	M : IE1 Efficiency Ins. B Standard Motor		
⑦Motor Power	01 : 0.1 kW		
	02 : 0.2 kW		
	04 : 0.4 kW		
⑧Number of Phases	S : 1-Phase Capacitor Run (Note 1)		
	C : 1-Phase Capacitor Start		
⑨Supply Voltage (Note 2)	N : 100 V/50 Hz, 100 V/60 Hz		
	W : 200 V/50 Hz, 200 V/60 Hz		
⑩Standards	J : No Standards		
⑪Terminal Box	A : A Type Terminal Box (Aluminum)		
⑫Brake Specifications	N : No Brake		
	B2 : 200 V Class Brake		
⑬Option	Blank : Standard Specification		
	X : Special Specification Code		
⑭Option Code (Note 3)	Terminal Box Position Code Please refer to page 584 for details.		

Note 1: 1-phase capacitor run type motors have built-in thermal protectors.
Refer to page 643 for the cautions for use.
Note 2: For voltages/frequencies not listed above, please contact your nearest Sales Office or the CS Center.
Note 3: The option code will not be shown in the nomenclature on the nameplate. But it will be shown in the Option code row of the nameplate.

H Type IP65 Gearmotors/IP65 Gearmotors with Brake MINI Series

Mounting Type	Motor Type		Frame Size	Shaft Arrangement		Reduction Ratio		Motor Power	Option	Option Code
HL	W	–	15	L	–	30	–	T25		
HF	V	–	18	T	–	50	–	S40	X	T6
①	②		③	④		⑤		⑥	⑦	⑧

①Mounting Type	HL : Right Angle Shaft Foot Mount		
	HF : Right Angle Shaft Flange Mount		
②Motor Type	W : With IP65 Motor (Output Shaft Material: Stainless Steel)		
	V : With IP65 Brakemotor (Output Shaft Material: Stainless Steel)		
③Frame Size and Output Shaft Diameter	Output Shaft Diameter		
④Shaft Arrangement	Output shaft on the left side when viewed from the input shaft side 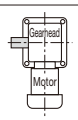	Output shaft on the right side when viewed from the input shaft side 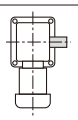	Output shaft on both sides when viewed from the input shaft side 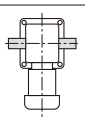
	L	R	T
⑤Reduction Ratio	10: 1/10 to 240: 1/240		
⑥Motor Power and Supply Voltage/ Frequency	T15 : 3-Phase 15 W		
	T25 : 3-Phase 25 W		
	T40 : 3-Phase 40 W		
	T60 : 3-Phase 60 W		
	T90 : 3-Phase 90 W		
	S15 : 1-Phase 15 W		
	S25 : 1-Phase 25 W		
	S40 : 1-Phase 40 W		
	3-Phase : 200 V/50 Hz, 200 V/60 Hz, 220 V/60 Hz 1-Phase : 100 V/50 Hz, 100 V/60 Hz		
⑦Option	Blank : Standard Voltage		
	X : Special Specification Code		
⑧Option Code (Note 1)	Cabtyre Cable Position Code Please refer to the list of option codes on page 581 for details.		

Note 1: The option code will not be shown in the nomenclature on the nameplate. But it will be shown in the Option code row of the nameplate.

H2 Type IP65 Gearmotors/IP65 Gearmotors with Brake MID Series

Gearhead Type					Motor Type							Brake Specifications	Option	
Mounting Type	Frame Size	Shaft Arrangement	Reduction Ratio		Motor Series	Motor Specifications	Motor Power	Number of Phases	Supply Voltage	Standards	Terminal Box	Brake	Option	Option Code
H2F	22	L	5	–	W	M	01	T	N	N	E	N		
H2L	32	M	15	–	W	R	08	T	W	N	E	V4	X	AA
H2L	50	T	120	–	W	R	15	T	K	N	E	V2	X	T9HZ
①	②	③	④		⑤	⑥	⑦	⑧	⑨	⑩	⑪	⑫	⑬	⑭

①Mounting Type	H2L : Right Angle Shaft Foot Mount H2F : Right Angle Shaft Flange Mount				
②Frame Size and Output Shaft Diameter	Output Shaft Diameter				
③Shaft Arrangement	Shaft Arrangement		Viewing from the input Shaft(↑), the Output shaft would be on the left side 	Viewing from the input Shaft(↑), the Output shaft would be on the right side 	Viewing from the input Shaft(↑), the Output shaft would be on the both sides 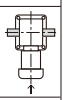
	Material	Carbon Steel	L	R	T
		Stainless Steel	H	M	B
④Reduction Ratio	5: 1/5 to 15X: 1/1500				
⑤Motor Type	W : IP65 Induction Motor				
⑥Motor Specifications (Note 1)	M : IE1 Efficiency Ins. F (0.1 kW) IE2 Efficiency Ins. F (0.2 kW to 0.4 kW)				
	R : IE3 Efficiency Ins. F (0.75 kW to 2.2 kW)				
⑦Motor Power	01 : 0.1 kW				
	02 : 0.2 kW				
	04 : 0.4 kW				
	08 : 0.75 kW				
	15 : 1.5 kW				
	22 : 2.2 kW				
⑧Number of Phases (Note 2)	T : 3-Phase				

⑨Supply Voltage (Note 3)	⑫Brake Specifications (Note 4)		
	N	V2	V4
N : 200 V/50 Hz, 200 V/60 Hz, 220 V/60 Hz	○	○	
W : 380 V/50 Hz, 400 V/50 Hz, 400 V/60 Hz, 440 V/60 Hz	○		○
K : 220 V/60 Hz, 380 V/60 Hz	○	○	○
C : 220 V/50 Hz, 230 V/50 Hz, 380 V/50 Hz	○	○	○
D : 220 V/50 Hz, 220 V/60 Hz, 380 V/50 Hz, 380 V/60 Hz	○	○	○
E : 415 V/50 Hz, 440 V/50 Hz, 480 V/60 Hz	○		○
U : 230 V/60 Hz, 460 V/60 Hz, 400 V/50 Hz	○	○	○
A : 208 V/60 Hz, 230 V/60 Hz, 460 V/60 Hz, 400 V/50 Hz	○	○	○
M : 575 V/60 Hz	○	○	

⑩Safety Standards	N : CE/UL/CCC	
	A : UL*Supply Voltage: M (575 V/60 Hz) only	
⑪Terminal Box	E : E Type Terminal Box (Aluminum)	
⑫Brake Specifications (Note 6)	N : No Brake	
	V2 : IP65 200 V Class Brake (Note 5)	
	V4 : IP65 400 V Class Brake (Note 5)	
⑬Option	Blank : Standard Specification	
	X : Special Specification Code	
⑭Option Code (Note 7)	Built-in Rectifier Connection Code For details, please refer to the list of option codes on page 561.	
	Terminal Box Position Code For details, please refer to the list of option codes on page 582.	
	For other option codes, please refer to the list of option codes on page 1012.	

Note 1: For CCC Standard, Three-phase 0.2 kW and Three-phase 0.4 kW are certified under limited duty cycle. Please be cautious upon selecting the product.
Note 2: Single-phase types are not available.
Note 3: Refer to the following for the corresponding motor powers for supply voltages.
Supply voltage D: 0.1 kW to 0.75 kW Supply voltage U: 0.75 kW to 2.2 kW Supply voltage A: 0.1 kW to 0.4 kW
Dual voltage is not available for gearmotors with brake and supply the voltage code “K”, “C”, “D”, “U” and “A”.
The motor voltage is limited by the brake specifications.
Note 4: ○ indicates a brake specification that can be manufactured.
Note 5: IP65 gearmotors with a brake are not available with motor powers of 1.5 kW and 2.2 kW.
Note 6: The rectifier is included with the product.
Note 7: The option code will not be shown in the nomenclature on the nameplate. But it will be shown in the Option code row of the nameplate.

H2 Type Gearmotors with Clutch/Brake MID Series

Gearhead Type					Motor Type							Brake Specifications	Option	
Mounting Type	Frame Size	Shaft Arrangement	Reduction Ratio		Motor Type	Motor Specifications	Motor Power	Number of Phases	Supply Voltage	Standards	Terminal Box	Brake	Option	Option Code
H2F	22	L	30	–	E	M	02	T	N	J	T	N		
H2L	32	R	100	–	E	M	04	T	W	J	T	N	X	T9HZ
H2L	40	T	160	–	E	R	08	T	W	J	T	N	X	T9HZ
①	②	③	④		⑤	⑥	⑦	⑧	⑨	⑩	⑪	⑫	⑬	⑭

①Mounting Type	H2L : Right Angle Shaft Foot Mount		
	H2F : Right Angle Shaft Flange Mount (only frame size 22)		
②Frame Size and Output Shaft Diameter	Output Shaft Diameter		
③Shaft Arrangement	Viewing from the input Shaft (↑), the Output shaft would be on the left side 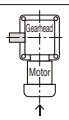	Viewing from the input Shaft (↑), the Output shaft would be on the right side 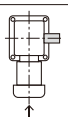	Viewing from the input Shaft(↑), the Output shaft would be on the both sides 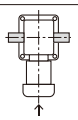
	L	R	T
④Reduction Ratio	5: 1/5 to 240: 1/240		
⑤Motor Type	E : Induction Motor With Clutch/Brake		
⑥Motor Specifications	M : IE2 Efficiency Ins. F (0.2 kW to 0.4 kW)		
	R : IE3 Efficiency Ins. F (0.75 kW)		
⑦Motor Power	02 : 3-Phase 0.2 kW		
	04 : 3-Phase 0.4 kW		
	08 : 3-Phase 0.75 kW		
⑧Number of Phases	T : 3-Phase		
⑨Supply Voltage (Note 1)	N : 200 V/50 Hz, 200 V/60 Hz, 220 V/60 Hz		
	W : 380 V/50 Hz, 400 V/50 Hz, 400 V/60 Hz, 440 V/60 Hz		
⑩Standards	J : No Standards		
⑪Terminal Box	T : T Type Terminal Box (Steel Plate)		
⑫Brake Specifications	N : No Brake (With Clutch/Brake)		
⑬Option	Blank : Standard Specification		
	X : Special Specification Code		
⑭Option Code (Note 2)	Terminal Box Position Code Please refer to page 584 for details.		

Note 1: For voltages/frequencies not listed above, please contact your nearest Sales Office or the CS Center.
Note 2: The option code will not be shown in the nomenclature on the nameplate. But it will be shown in the Option code row of the nameplate.
Note 3: Please avoid using gearmotors with clutch/brake in vertical operation (lifting). There is a danger of falling during a power outage.

H Type Speed Control Gearmotors MINI Series

Mounting Type	Motor Type		Frame Size	Shaft Arrangement		Reduction Ratio		Motor Power	Supply Voltage	Terminal Box	Option	Option Code
HL	U	–	15	L	–	30	–	S25				
HF	P	–	22	T	–	450	–	S40	W	C	X	T6
①	②		③	④		⑤		⑥	⑦	⑧	⑨	⑩

①Mounting Type	HL : Right Angle Shaft Foot Mount		
	HF : Right Angle Shaft Flange Mount (up to frame size 22)		
②Motor Type	U : U Type with Speed Control Motor (Controller Set)		
	P : P Type with Speed Control Motor (Controller: Sold Separately)		
③Frame Size and Output Shaft Diameter	Output Shaft Diameter		
④Shaft Arrangement	Output shaft on the left side when viewed from the input shaft side 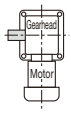	Output shaft on the right side when viewed from the input shaft side 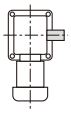	Output shaft on both sides when viewed from the input shaft side 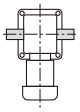
	L	R	T
⑤Reduction Ratio	10: 1/10 to 1800: 1/1800		
⑥Motor Power	S15 : 1-Phase 15 W		
	S25 : 1-Phase 25 W		
	S40 : 1-Phase 40 W		
	S60 : 1-Phase 60 W		
	S90 : 1-Phase 90 W		
⑦Supply Voltage (High Voltage (200 V Class): Option)	Blank : Standard Voltage 1-Phase 100 V/50 Hz, 100 V/60 Hz		
	W : High Voltage (200 V Class) 1-Phase 200 V/50 Hz, 200 V/60 Hz		
⑧Terminal Box (Option) (Note 1)	Blank : Flying Leads (Standard Type)		
	C : Terminal Box for P Type		
⑨Option	Blank : Standard Specification		
	X : Special Specification Code		
⑩Option Code (Note 2)	Lead Wires/Terminal Box Position Code Please refer to the list of option codes on page 581 for details.		

Note 1: Please refer to page 639 for the specifications of terminal boxes.
Note 2: The option code will not be shown in the nomenclature on the nameplate. But it will be shown in the Option code row of the nameplate.

Controller

■ Type Code

Part Number			Supply Voltage		Function	Part Number
SC	P	–	10		1	L

- L: **Blank**: U Type / L : P Type
- Function: 0: Only Variable Speed (Only U Type) / 1: Variable Speed + Instant Stop / 2: Variable Speed + Instant Stop + Slow Start/Slow Down / 3: Variable Speed + Instant Stop + Slow Start/Slow Down + Parallel Operation
- Voltage: 10: 1-Phase 100 V / 20: 1-Phase 200 V
- P: U: U Type (sold in set with gearmotor) / P: P Type (sold separately from gearmotor)
- SC: SC: Generic name for Speed Controller

H2 Type Gearboxes (Double Shaft Type) MID Series

Mounting Type	Motor Type		Frame Size	Shaft Arrangement		Reduction Ratio		Motor Power Class	Option	Terminal Box	Option	Option Code
H2L		–	32	L	–	200	–	040				
H2F		–	22	T	–	50	–	020			X	
①	②		③	④		⑤		⑥	⑦	⑧	⑨	⑩

①Mounting Type	H2L : Right Angle Shaft Foot Mount		
	H2F : Right Angle Shaft Flange Mount (only frame size 22)		
②Motor Type	Blank : Without Motor (Double Shaft Type)		
③Frame Size and Output Shaft Diameter	Output Shaft Diameter		
④Shaft Arrangement	Viewing from the input Shaft (↑), the Output shaft would be on the left side 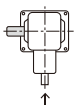	Viewing from the input Shaft (↑), the Output shaft would be on the right side 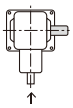	Viewing from the input Shaft(↑), the Output shaft would be on the both sides 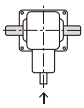
	L	R	T
⑤Reduction Ratio	5: 1/5 to 1500: 1/1500		
⑥Motor Designation and Power	020 : 0.2 kW Class		
	040 : 0.4 kW Class		
	075 : 0.75 kW Class		
	150 : 1.5 kW Class		
	220 : 2.2 kW Class		
⑦ ⑧Options	Blank : Standard Specification There is no applicable option.		
⑨Option	Blank : Standard Specification		
	X : Special Specification Code		
⑩Option Code (Note 1)	Blank : Standard Specification		

Note 1: The option code will not be shown in the nomenclature on the nameplate. But it will be shown in the Option code row of the nameplate.

H2 Type S-Type Gearboxes MID Series

Mounting Type	Motor Type		Frame Size	Shaft Arrangement		Reduction Ratio		Motor Power Class	Option	Terminal Box	Option
H2L	S	–	32	L	–	200	–	040			
H2F	S	–	22	T	–	50	–	020			X
①	②		③	④		⑤		⑥	⑦	⑧	⑨

①Mounting Type	H2L : Right Angle Shaft Foot Mount		
	H2F : Right Angle Shaft Flange Mount (only frame size 22)		
②Motor Type	S : Type That Can be Equipped with Designated Motor (S-Type)		
③Frame Size and Output Shaft Diameter	Output Shaft Diameter		
④Shaft Arrangement	Viewing from the input Shaft (↑), the Output shaft would be on the left side 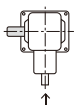	Viewing from the input Shaft (↑), the Output shaft would be on the right side 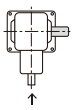	Viewing from the input Shaft(↑), the Output shaft would be on the both sides 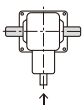
	L	R	T
⑤Reduction Ratio	5: 1/5 to 1500: 1/1500		
⑥Motor Designation and Power	020 : 0.2 kW Class		
	040 : 0.4 kW Class		
	075 : 0.75 kW Class		
	150 : 1.5 kW Class		
	220 : 2.2 kW Class		
⑦ ⑧Options	Blank : Standard Specification		
⑨Option	Blank : Standard Specification		
	X : Special Specification Code		

Standard Model Lineup

H Type Gearmotors/Gearmotors with Brake MINI Series

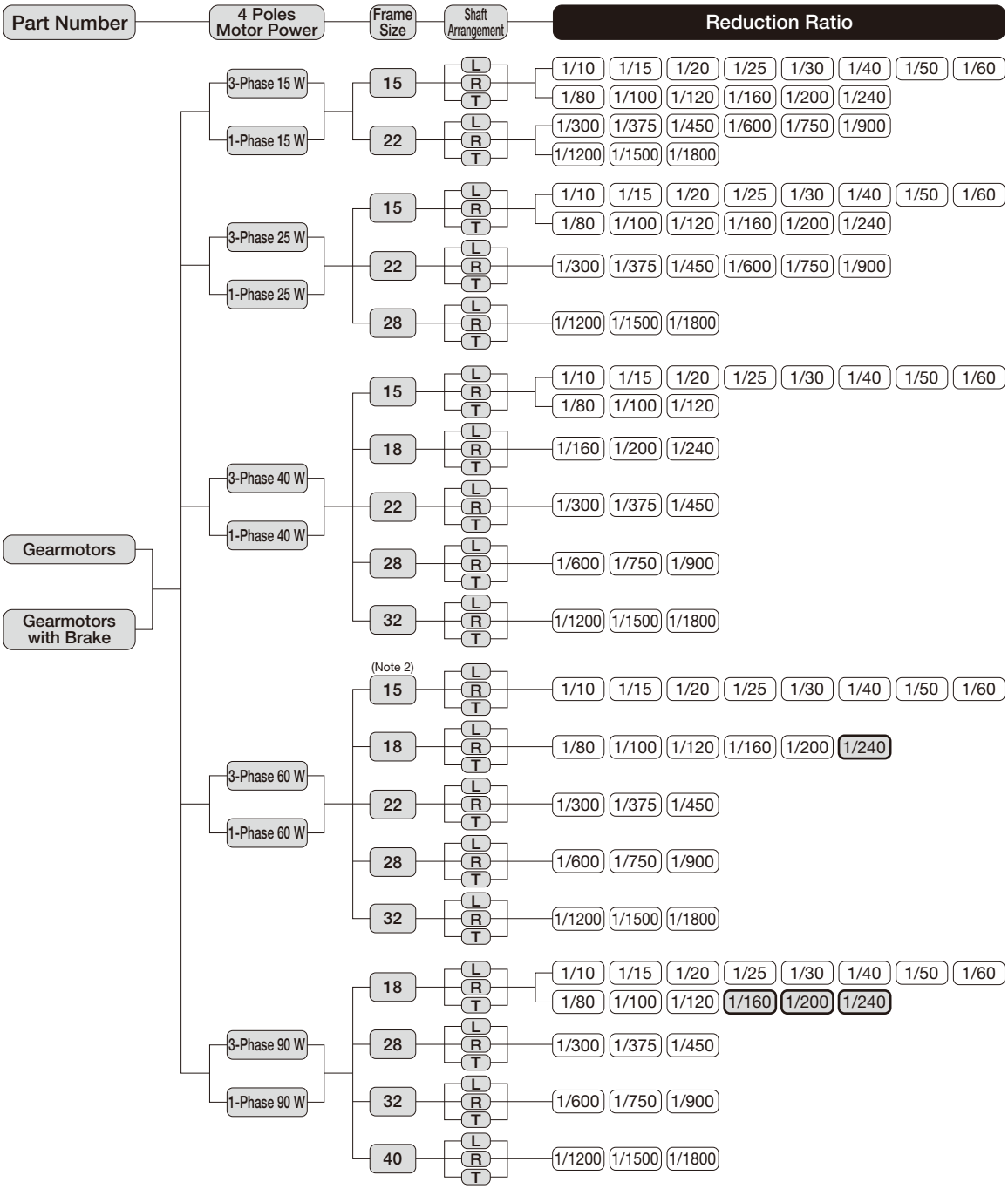

Note 1: Please note that mounting type HF is available only for frame sizes 15 to 22.
Note 2: The frame size for types other than three-phase standard voltage types is 18. The frame size for all single-phase types is 18.
Note 3: ⬭ indicates a limited torque type. Please make sure to check the allowable output shaft torque in the performance table.

H2 Type Gearmotors/Gearmotors with Brake MID Series

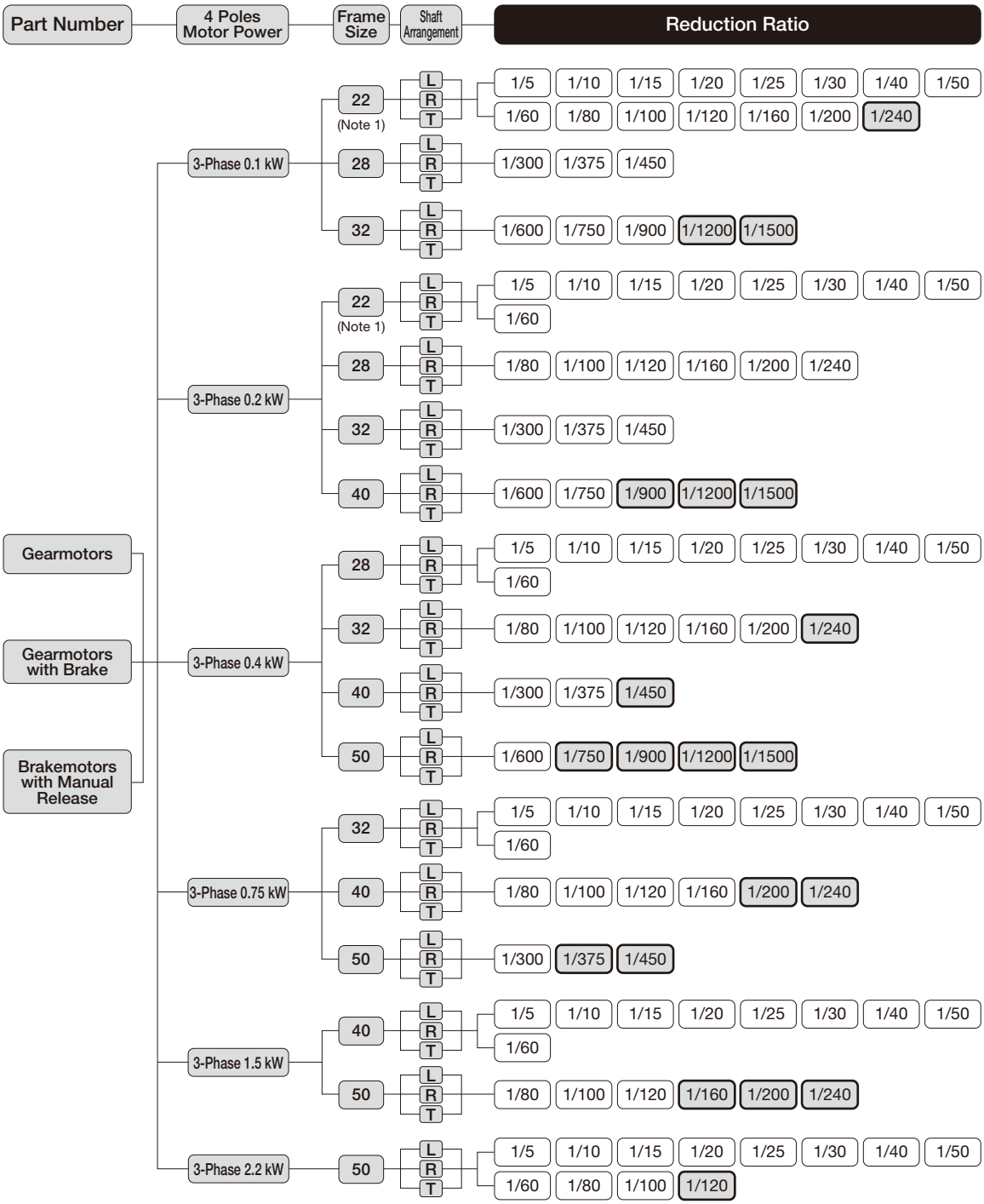

Note 1: The flange mount type (H2F) is also available for frame size 22 only.
Note 2: ▭ indicates a limited torque type. Please make sure to check the allowable output shaft torque in the performance table.

H2 Type Gearmotors/Gearmotors with Brake MID Series

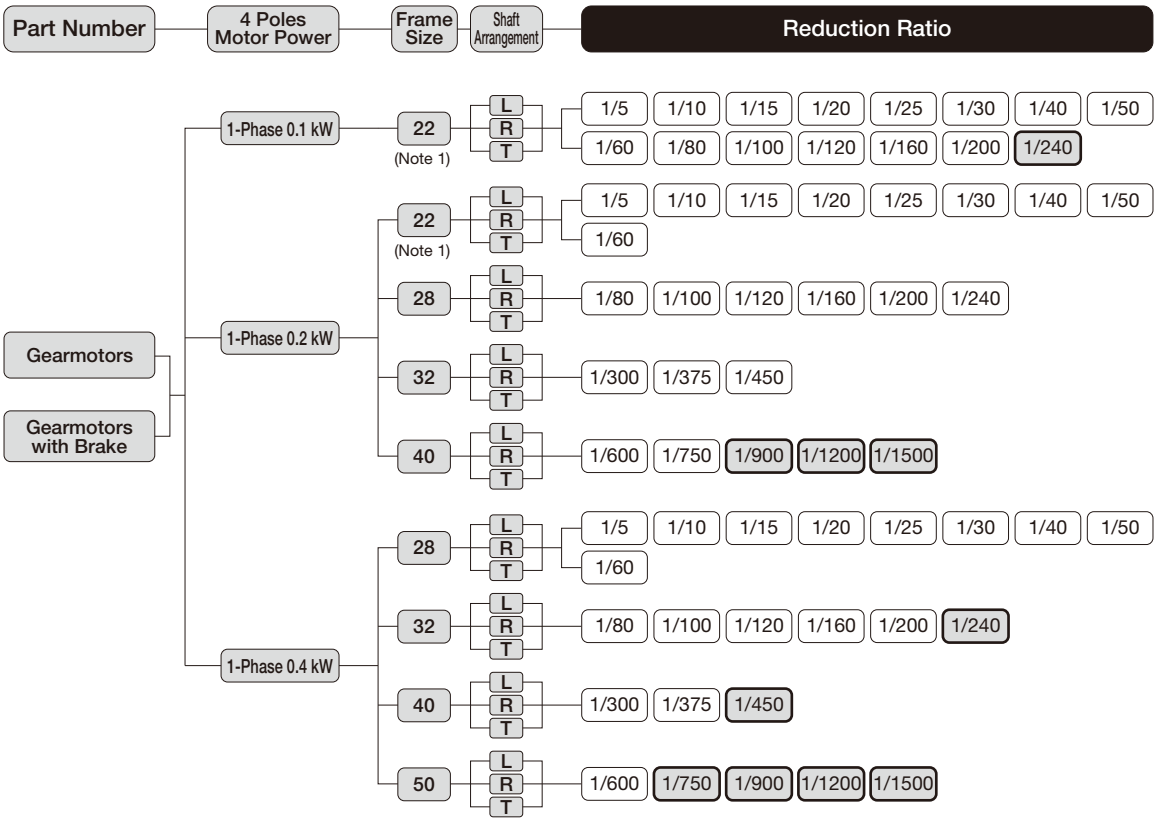

Note 1: The flange mount type (H2F) is also available for frame size 22 only.
Note 2: ▭ indicates a limited torque type. Please make sure to check the allowable output shaft torque in the performance table.

H Type IP65 Gearmotors/IP65 Gearmotors with Brake MINI Series

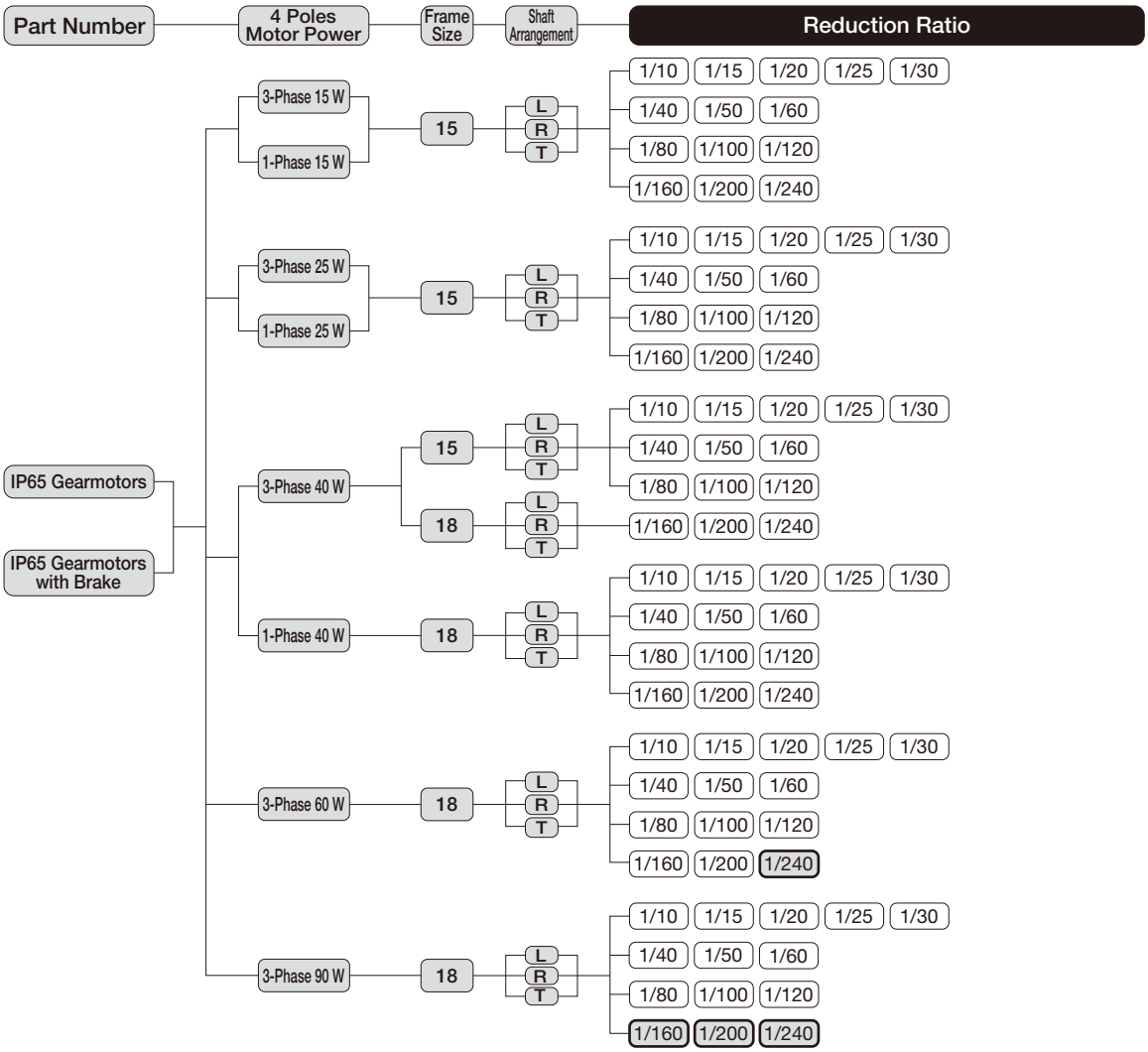

Note 1: Single-phase types are not available for 60 W and 90 W.
Note 2: ⬭ indicates a limited torque type. Please make sure to check the allowable output shaft torque in the performance table.

H2 Type IP65 Gearmotors/IP65 Gearmotors with Brake MID Series

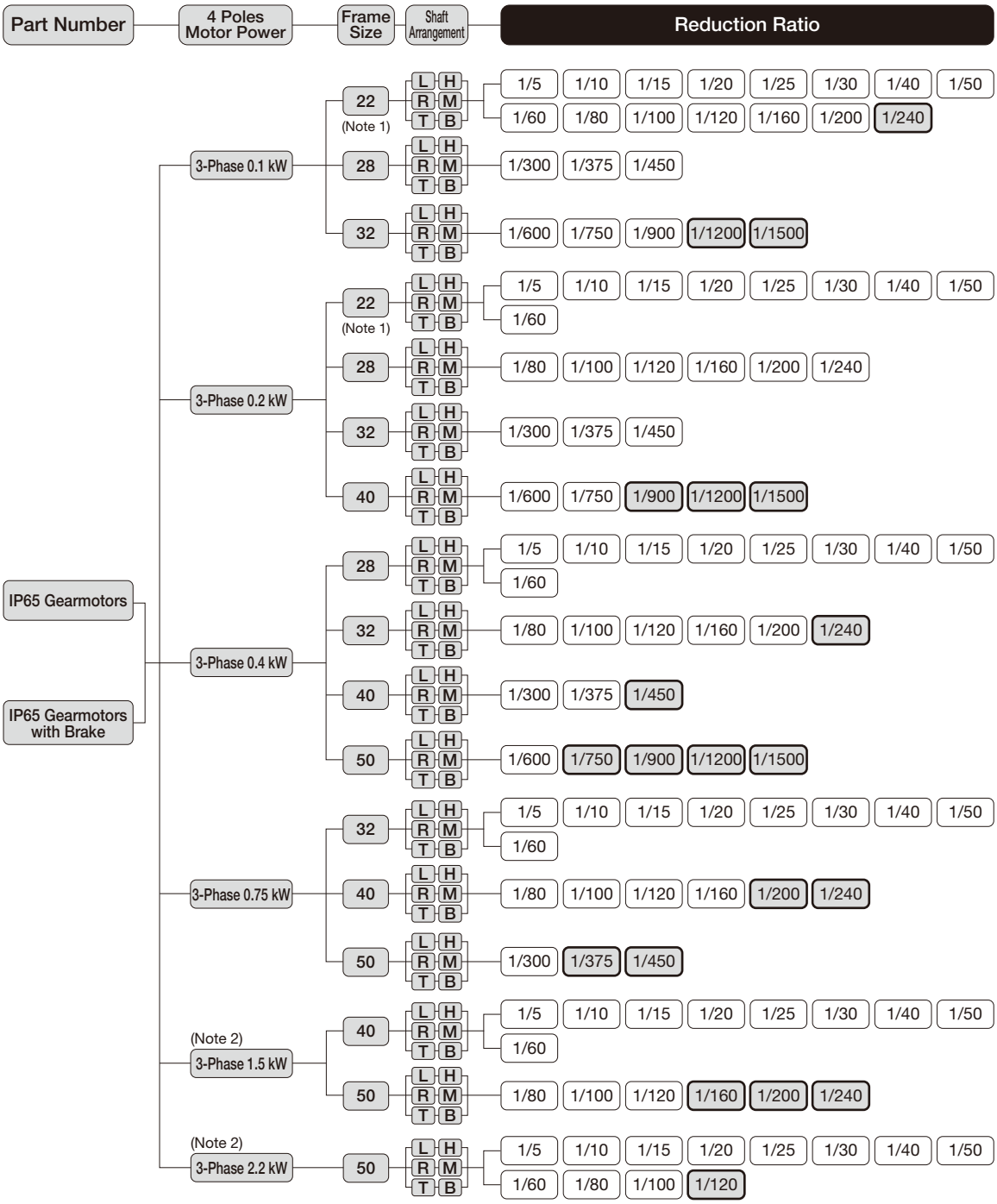

Note 1: The flange mount type (H2F) is also available for frame size 22 only.
Note 2: IP65 gearmotors with a brake are not available with motor powers of 1.5 kW and 2.2 kW.
Note 3: ▭ indicates a limited torque type. Please make sure to check the allowable output shaft torque in the performance table.

H2 Type Gearmotors with Clutch/Brake MID Series

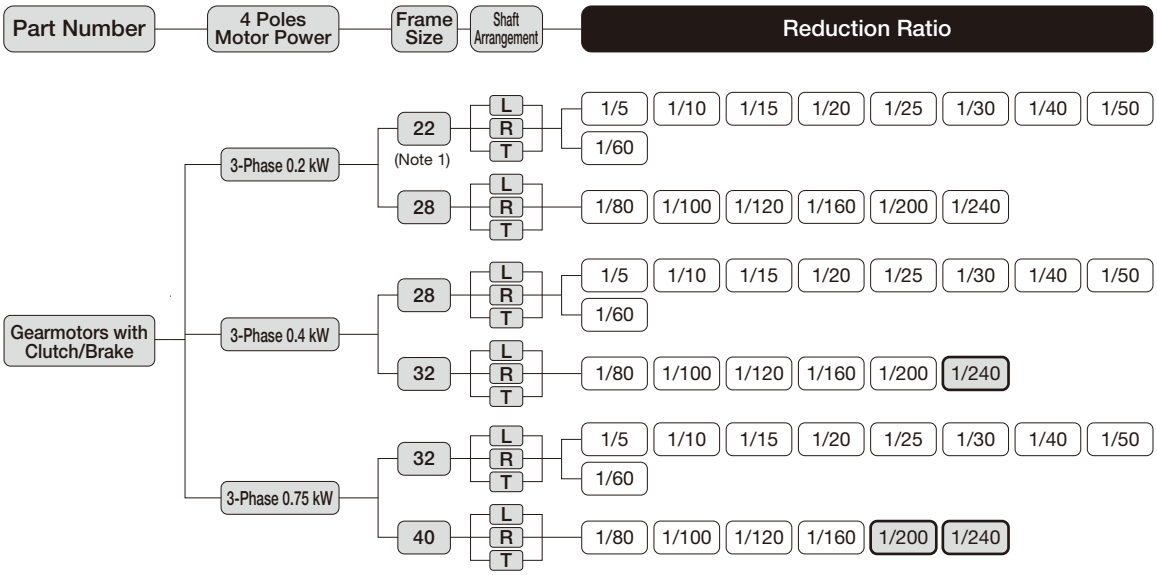

Note 1: The flange mount type (H2F) is also available for frame size 22 only.
Note 2: ▭ indicates a limited torque type. Please make sure to check the allowable output shaft torque in the performance table.
Note 3: Single-phase motors with a clutch/brake are not available.

H Type Speed Control Gearmotors MINI Series

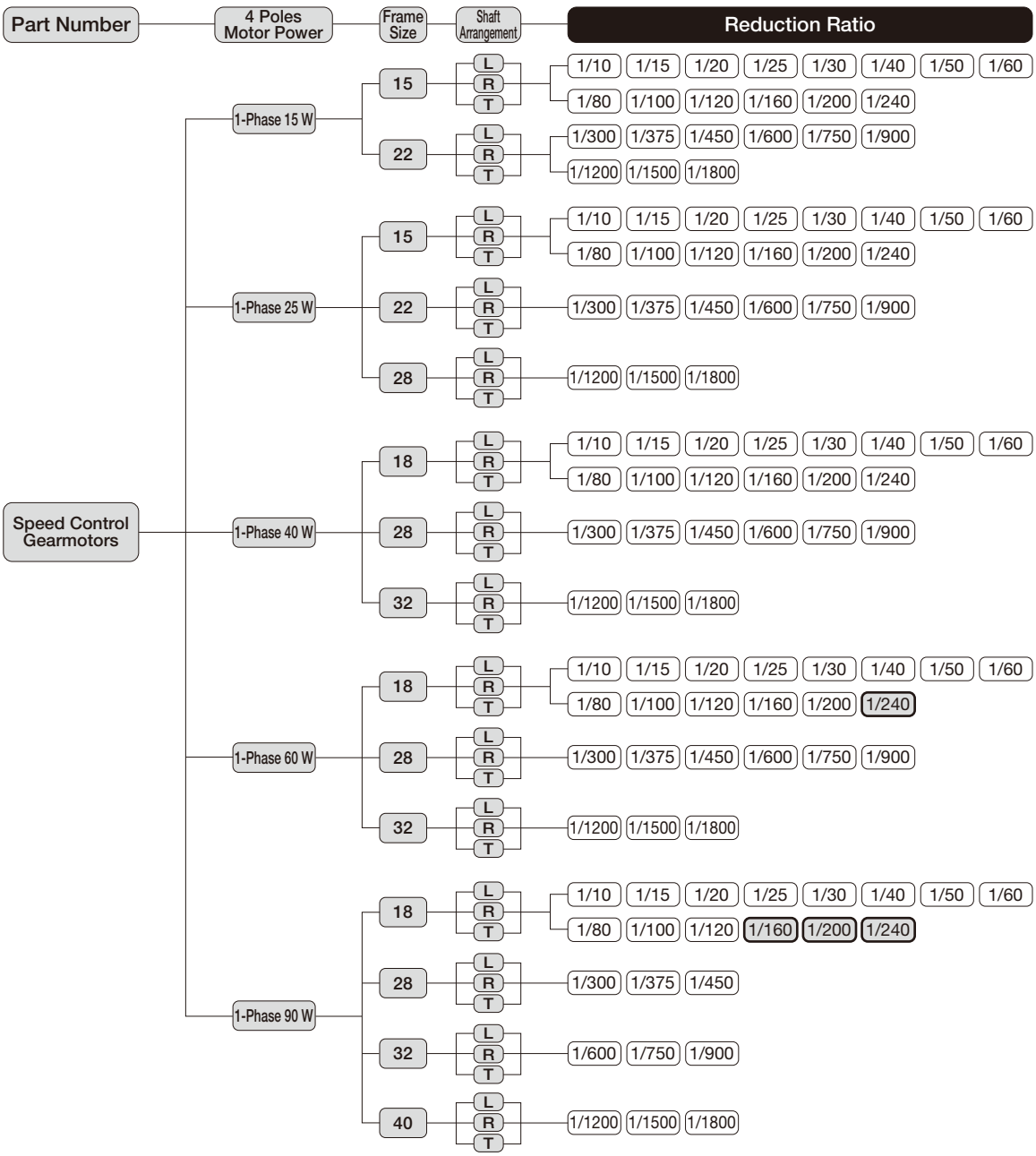

Note 1: Please note that mounting type HF is available only for frame sizes 15 to 22.
Note 2: ▭ indicates a limited torque type. Please make sure to check the allowable output shaft torque in the performance table.

H2 Type Gearboxes (Double Shaft Type) MID Series

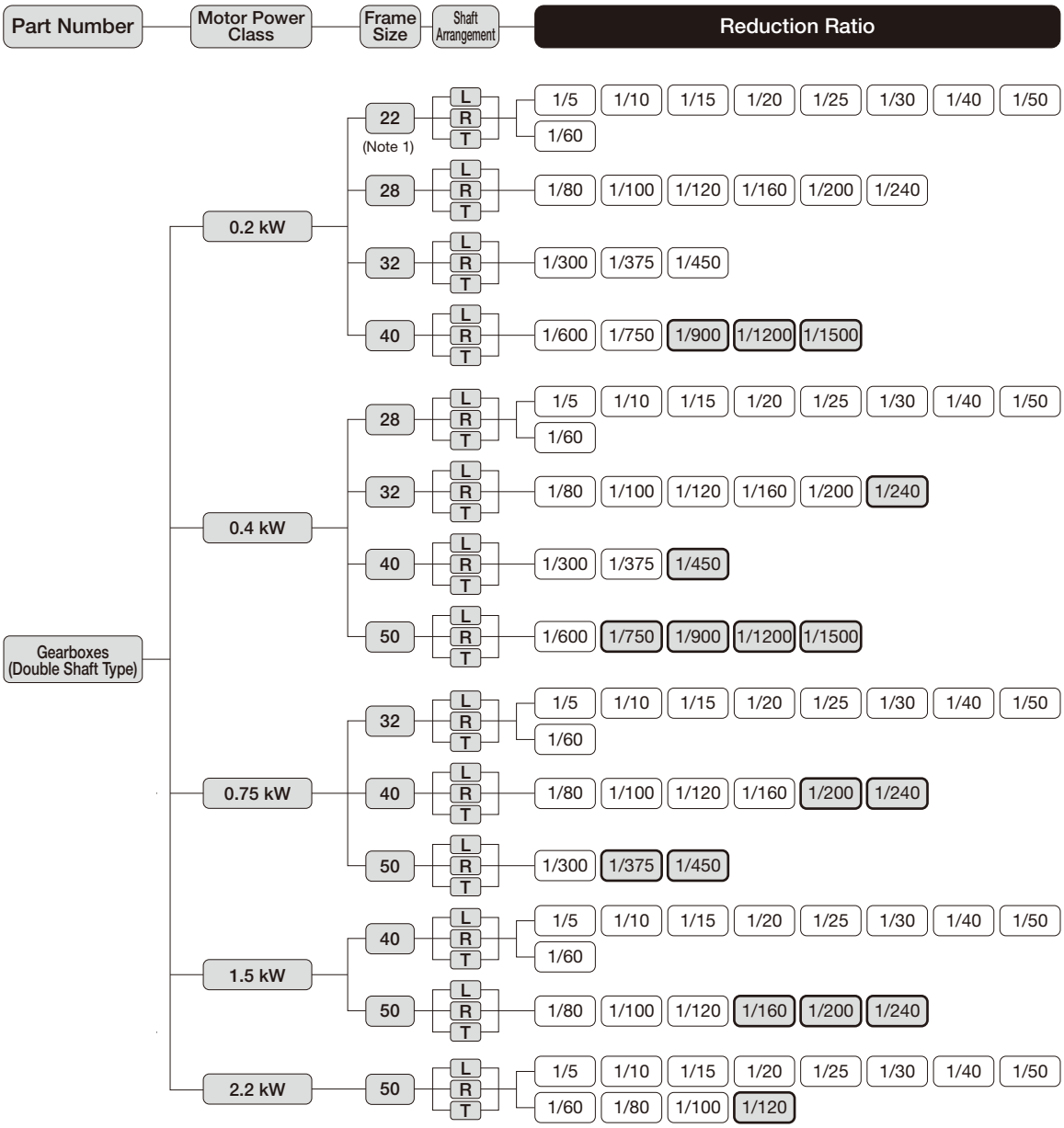

Note 1: The flange mount type (H2F) is also available for frame size 22 only.
Note 2: ▭ indicates a limited torque type. Please make sure to check the allowable output shaft torque in the performance table.

H2 Type S-Type Gearboxes MID Series

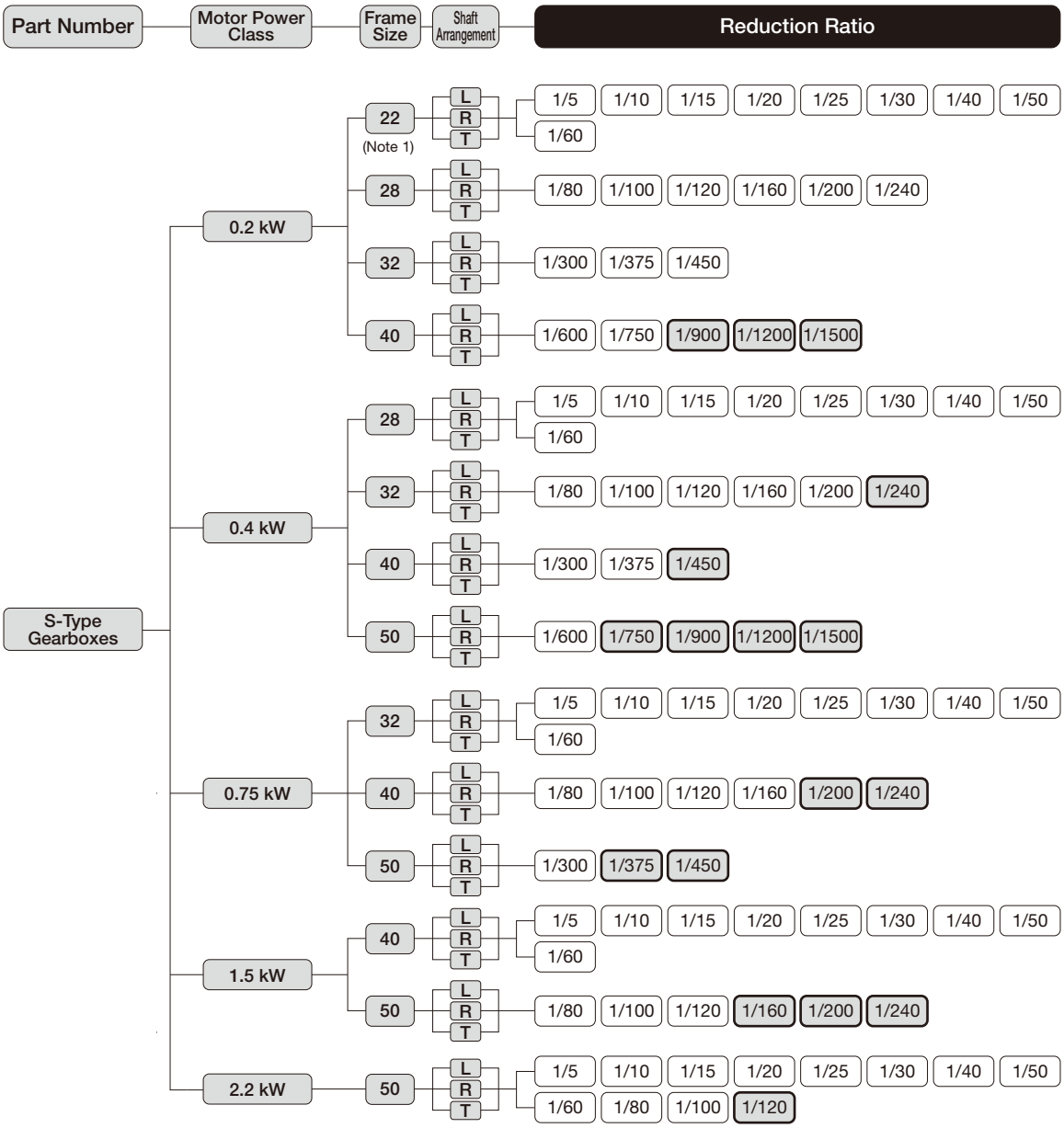

Note 1: The flange mount type (H2F) is also available for frame size 22 only.
Note 2: ▭ indicates a limited torque type. Please make sure to check the allowable output shaft torque in the performance table.

MEMO

1. Gearmotors
Gearmotors with Brake

1-1. Motor Characteristics Table

H Type 3-Phase Standard Voltage

Series	Power (W)	Voltage (V)	Frequency (Hz)	Frame Size	Rated Current (A)	Rated Speed (r/min)	Startup Current (A)
MINI	15	200/200/220	50/60/60	15	0.14/0.13/0.13	1350/1550/1600	0.30/0.28/0.31
				22	0.14/0.13/0.13	1350/1550/1600	0.30/0.28/0.31
	25	200/200/220	50/60/60	15	0.21/0.19/0.19	1350/1550/1600	0.44/0.42/0.46
				22	0.21/0.19/0.19	1350/1550/1600	0.44/0.42/0.46
				28	0.18/0.17/0.17	1350/1550/1600	0.43/0.41/0.46
	40	200/200/220	50/60/60	15	0.29/0.27/0.27	1350/1550/1600	0.67/0.62/0.68
				18	0.27/0.26/0.26	1350/1550/1550	0.73/0.69/0.76
				22	0.29/0.27/0.27	1350/1550/1600	0.67/0.62/0.68
				28	0.27/0.26/0.26	1350/1550/1550	0.73/0.69/0.76
				32	0.27/0.26/0.26	1350/1550/1550	0.73/0.69/0.76
	60	200/200/220	50/60/60	15	0.42/0.39/0.39	1350/1550/1550	0.94/0.86/1.00
				18	0.40/0.36/0.36	1350/1550/1600	1.04/0.97/1.07
				22	0.42/0.39/0.39	1350/1550/1550	0.94/0.86/1.00
				28	0.40/0.36/0.36	1350/1550/1600	1.04/0.97/1.07
				32	0.40/0.36/0.36	1350/1550/1600	1.04/0.97/1.07
	90	200/200/220	50/60/60	18	0.51/0.48/0.48	1350/1550/1550	1.42/1.36/1.49
				28	0.51/0.48/0.48	1350/1550/1550	1.42/1.36/1.49
				32	0.51/0.48/0.48	1350/1550/1550	1.42/1.36/1.49
				40	0.47/0.47/0.47	1350/1550/1600	1.59/1.51/1.66

The rated current in the motor characteristics table and performance table is the current data for the motor operating without a gearbox.
With regard to gearmotors with a brake, it is necessary to consider the current value flowing through the brake as needed.
For more details, please contact your nearest Sales Office or the CS Center.

H Type 3-Phase High Voltage (400 V Class)

Series	Power (W)	Voltage (V)	Frequency (Hz)	Frame Size	Rated Current (A)	Rated Speed (r/min)	Startup Current (A)
MINI	15	380/400/400/440	50/50/60/60	15	0.11/0.12/0.10/0.11	1400/1400/1700/1700	0.26/0.28/0.26/0.29
				22	0.11/0.12/0.10/0.11	1400/1400/1700/1700	0.26/0.28/0.26/0.29
	25	380/400/400/440	50/50/60/60	15	0.11/0.12/0.11/0.12	1350/1400/1600/1650	0.26/0.28/0.26/0.29
				22	0.11/0.12/0.11/0.12	1350/1400/1600/1650	0.26/0.28/0.26/0.29
				28	0.09/0.09/0.09/0.09	1300/1350/1550/1600	0.20/0.21/0.20/0.22
	40	380/400/400/440	50/50/60/60	15	0.14/0.14/0.14/0.14	1300/1350/1550/1600	0.30/0.32/0.30/0.33
				18	0.13/0.14/0.13/0.14	1300/1350/1550/1600	0.33/0.35/0.33/0.37
				22	0.14/0.14/0.14/0.14	1300/1350/1550/1600	0.30/0.32/0.30/0.33
				28	0.13/0.14/0.13/0.14	1300/1350/1550/1600	0.33/0.35/0.33/0.37
				32	0.13/0.14/0.13/0.14	1300/1350/1550/1600	0.33/0.35/0.33/0.37
	60	380/400/400/440	50/50/60/60	18	0.17/0.17/0.17/0.17	1300/1350/1550/1600	0.43/0.45/0.43/0.47
				22	0.20/0.20/0.20/0.20	1250/1300/1500/1550	0.38/0.40/0.38/0.41
				28	0.17/0.17/0.17/0.17	1300/1350/1550/1600	0.43/0.45/0.43/0.47
				32	0.17/0.17/0.17/0.17	1300/1350/1550/1600	0.43/0.45/0.43/0.47
	90	380/400/400/440	50/50/60/60	18	0.26/0.26/0.26/0.26	1300/1350/1550/1600	0.70/0.74/0.69/0.77
				28	0.26/0.26/0.26/0.26	1300/1350/1550/1600	0.70/0.74/0.69/0.77
				32	0.26/0.26/0.26/0.26	1300/1350/1550/1600	0.70/0.74/0.69/0.77
				40	0.23/0.23/0.24/0.24	1350/1350/1600/1650	0.73/0.78/0.74/0.81

The rated current in the motor characteristics table and performance table is the current data for the motor operating without a gearbox.
With regard to gearmotors with a brake, it is necessary to consider the current value flowing through the brake as needed.
For more details, please contact your nearest Sales Office or the CS Center.

H Type 1-Phase Standard Voltage

Series	Power (W)	Voltage (V)	Frequency (Hz)	Frame Size	Rated Current (A)	Rated Speed (r/min)	Startup Current (A)	Capacitor (μF)
MINI	15	100/100	50/60	15	0.39/0.35	1350/1650	0.72/0.67	5
				22	0.39/0.35	1350/1650	0.72/0.67	5
	25	100/100	50/60	15	0.48/0.48	1350/1600	0.86/0.80	7
				22	0.48/0.48	1350/1600	0.86/0.80	7
				28	0.44/0.45	1350/1650	1.00/0.92	7
	40	100/100	50/60	15	0.67/0.80	1400/1650	1.26/1.23	12
				18	0.61/0.66	1350/1650	1.43/1.36	10
				22	0.67/0.80	1400/1650	1.26/1.23	12
				28	0.61/0.66	1350/1650	1.43/1.36	10
				32	0.61/0.66	1350/1650	1.43/1.36	10
	60	100/100	50/60	18	0.90/1.00	1350/1600	2.11/1.98	15
				22	0.90/1.10	1300/1500	1.33/1.34	15
				28	0.90/1.00	1350/1600	2.11/1.98	15
				32	0.90/1.00	1350/1600	2.11/1.98	15
	90	100/100	50/60	18	1.30/1.40	1350/1600	2.89/2.68	20
				28	1.30/1.40	1350/1600	2.89/2.68	20
				32	1.30/1.40	1350/1600	2.89/2.68	20
				40	1.20/1.40	1350/1600	3.27/3.04	20

The rated current in the motor characteristics table and performance table is the current data for the motor operating without a gearbox.
With regard to gearmotors with a brake, it is necessary to consider the current value flowing through the brake as needed.
For more details, please contact your nearest Sales Office or the CS Center.

H Type 1-Phase High Voltage (200 V Class)

Series	Power (W)	Voltage (V)	Frequency (Hz)	Frame Size	Rated Current (A)	Rated Speed (r/min)	Startup Current (A)	Capacitor (μF)
MINI	15	200/200	50/60	15	0.21/0.19	1350/1650	0.35/0.33	1.2
				22	0.21/0.19	1350/1650	0.35/0.33	1.2
	25	200/200	50/60	15	0.26/0.25	1350/1600	0.47/0.44	1.7
				22	0.26/0.25	1350/1600	0.47/0.44	1.7
				28	0.23/0.24	1350/1650	0.46/0.45	1.7
	40	200/200	50/60	15	0.34/0.33	1350/1600	0.66/0.60	2.5
				18	0.29/0.34	1350/1600	0.64/0.61	2.5
				22	0.34/0.33	1350/1600	0.66/0.60	2.5
				28	0.29/0.34	1350/1600	0.64/0.61	2.5
				32	0.29/0.34	1350/1600	0.64/0.61	2.5
	60	200/200	50/60	18	0.45/0.48	1350/1600	1.06/1.00	3.5
				22	0.43/0.50	1300/1500	0.67/0.64	3.5
				28	0.45/0.48	1350/1600	1.06/1.00	3.5
				32	0.45/0.48	1350/1600	1.06/1.00	3.5
	90	200/200	50/60	18	0.65/0.66	1350/1600	1.44/1.35	5
				28	0.65/0.66	1350/1600	1.44/1.35	5
				32	0.65/0.66	1350/1600	1.44/1.35	5
				40	0.59/0.65	1400/1650	1.67/1.58	5

The rated current in the motor characteristics table and performance table is the current data for the motor operating without a gearbox.
With regard to gearmotors with a brake, it is necessary to consider the current value flowing through the brake as needed.
For more details, please contact your nearest Sales Office or the CS Center.

H2 Type 3-Phase Standard Voltage/High Voltage (400 V Class)/Special Voltage

Series	Power	Power Supply/ Certification Codes	Voltage (V)	Frequency (Hz)	Rated Current (A)	Startup Current (A)	Rated Speed (r/min)
MID	0.1 kW	NN	200/200/220	50/60/60	0.61/0.54/0.54	2.39/2.27/2.52	1410/1690/1710
		WN	380/400/400/440	50/50/60/60	0.31/0.31/0.28/0.28	1.12/1.18/1.12/1.22	1400/1410/1690/1720
		KN	220/380	60/60	0.52/0.30	1.90/1.10	1680/1680
		CN	220/230/380	50/50/50	0.55/0.54/0.31	1.94/2.03/1.12	1400/1410/1400
		DN	220/220/380/380	50/60/50/60	0.55/0.52/0.31/0.30	1.94/1.90/1.12/1.10	1400/1680/1400/1680
		EN	415/440/480	50/50/60	0.30/0.29/0.26	1.06/1.12/1.17	1390/1420/1720
		AN	208/230/460/400	60/60/60/50	0.54/0.57/0.29/0.31	2.35/2.62/1.26/1.21	1690/1730/1730/1410
		MA	575	60	0.20	0.87	1700
	0.2 kW IE2	NN	200/200/220	50/60/60	1.1/1.0/1.0	4.70/4.35/4.85	1400/1680/1700
		WN	380/400/400/440	50/50/60/60	0.56/0.56/0.50/0.50	2.29/2.38/2.29/2.48	1390/1400/1680/1710
		KN	220/380	60/60	0.93/0.52	3.70/2.20	1680/1680
		CN	220/230/380	50/50/50	0.99/0.98/0.56	3.97/4.15/2.29	1400/1410/1390
		DN	220/220/380/380	50/60/50/60	0.99/0.93/0.56/0.52	3.97/3.70/2.29/2.20	1400/1680/1390/1680
		EN	415/440/480	50/50/60	0.50/0.50/0.45	1.75/1.86/2.00	1370/1400/1700
		AN	208/230/460/400	60/60/60/50	1.0/1.0/0.50/0.56	4.78/5.16/2.56/2.44	1680/1720/1720/1400
		MA	575	60	0.40	1.78	1710
	0.4 kW IE2	NN	200/200/220	50/60/60	2.1/1.8/1.8	9.60/8.54/9.21	1400/1680/1700
		WN	380/400/400/440	50/50/60/60	1.0/1.0/0.9/0.9	4.43/4.64/4.24/4.85	1390/1400/1680/1710
		KN	220/380	60/60	1.7/1.0	7.10/4.09	1670/1670
		CN	220/230/380	50/50/50	1.8/1.8/1.0	7.63/8.04/4.43	1390/1400/1390
		DN	220/220/380/380	50/60/50/60	1.8/1.7/1.0/1.0	7.63/7.10/4.43/4.09	1390/1670/1390/1670
		EN	415/440/480	50/50/60	0.96/0.95/0.82	4.45/4.56/4.52	1390/1410/1680
		AN	208/230/460/400	60/60/60/50	1.8/1.8/0.9/1.0	9.21/9.82/5.06/4.62	1680/1720/1720/1400
		MA	575	60	0.68	3.94	1700
	0.75 kW IE3	NN	200/200/220	50/60/60	3.5/3.2/3.1	21.8/19.0/21.1	1450/1740/1750
		WN	380/400/400/440	50/50/60/60	1.73/1.72/1.58/1.54	10.2/10.8/9.8/10.7	1440/1450/1740/1750
		KN	220/380	60/60	2.9/1.7	16.9/9.8	1740/1740
		CN	220/230/380	50/50/50	3.0/3.0/1.7	17.8/18.7/10.3	1450/1450/1440
		DN	220/220/380/380	50/60/50/60	3.1/2.9/1.8/1.7	19.3/16.9/11.2/9.8	1450/1740/1450/1740
		EN	415/440/480	50/50/60	1.54/1.52/1.36	8.6/9.3/9.0	1440/1450/1750
		UN	230/460/400	60/60/50	3.1/1.5/1.7	22.3/11.2/10.8	1760/1760/1450
		MA	575	60	1.16	7.2	1750
	1.5 kW IE3	NN	200/200/220	50/60/60	6.7/6.1/5.9	45.6/40.3/45.1	1450/1740/1760
		WN	380/400/400/440	50/50/60/60	3.4/3.4/3.1/3.0	21.9/23.2/20.4/22.8	1450/1450/1750/1760
		KN	220/380	60/60	5.9/3.4	45.1/25.8	1760/1760
		CN	220/230/380	50/50/50	5.9/5.9/3.4	38.5/40.4/22.1	1450/1450/1450
		EN	415/440/480	50/50/60	3.1/3.1/2.8	20.8/22.2/21.2	1450/1460/1760
		UN	230/460/400	60/60/50	5.9/2.9/3.3	44.9/22.6/23.2	1760/1760/1450
		MA	575	60	2.2	17.0	1760
	2.2 kW IE3	NN	200/200/220	50/60/60	9.3/8.6/8.2	70.3/56.9/63.7	1470/1760/1770
		WN	380/400/400/440	50/50/60/60	4.5/4.4/4.2/3.9	30.0/32.0/25.0/28.0	1440/1450/1740/1750
		KN	220/380	60/60	8.3/4.8	65.0/38.0	1770/1770
		CN	220/230/380	50/50/50	7.9/7.7/4.5	52.0/54.3/30.0	1460/1470/1440
		EN	415/440/480	50/50/60	4.3/4.3/3.8	33.1/35.5/29.8	1460/1470/1770
		UN	230/460/400	60/60/50	7.9/4.0/4.5	65.2/34.8/36.3	1770/1770/1470
		MA	575	60	3.3	24.4	1760

The rated current in the motor characteristics table and performance table is the current data for the motor operating without a gearbox.
With regard to gearmotors with a brake, it is necessary to consider the current value flowing through the brake as needed.
For more details, please contact your nearest Sales Office or the CS Center.

H2 Type 1-Phase Standard Voltage

Series	Power	Startup Method	Voltage (V)	Frequency (Hz)	Rated Current (A)	Startup Current (A)	Rated Speed (r/min)	Startup Torque (%)	Breakdown Torque (%)
MID	0.1 kW	Capacitor Run	100/100	50/60	1.7/1.9	4.40/4.07	1400/1700	60/70	165/172
	0.2 kW	Capacitor Start	100/100	50/60	5.1/4.5	20.0/20.0	1420/1700	276/294	194/187
	0.4 kW	Capacitor Start	100/100	50/60	8.7/7.9	32.0/32.0	1440/1730	210/205	189/178

The rated current in the motor characteristics table and performance table is the current data for the motor operating without a gearbox.
With regard to gearmotors with a brake, it is necessary to consider the current value flowing through the brake as needed.
For more details, please contact your nearest Sales Office or the CS Center.

H2 Type 1-Phase High Voltage (200 V Class)

Series	Power	Startup Method	Voltage (V)	Frequency (Hz)	Rated Current (A)	Startup Current (A)	Rated Speed (r/min)	Startup Torque (%)	Breakdown Torque (%)
MID	0.1 kW	Capacitor Run	200/200	50/60	0.82/0.96	2.10/2.00	1410/1700	65/81	163/178
	0.2 kW	Capacitor Start	200/200	50/60	2.5/2.2	10.0/10.0	1420/1700	254/250	203/205
	0.4 kW	Capacitor Start	200/200	50/60	4.3/3.9	19.0/18.0	1440/1730	181/190	240/217

The rated current in the motor characteristics table and performance table is the current data for the motor operating without a gearbox.
With regard to gearmotors with a brake, it is necessary to consider the current value flowing through the brake as needed.
For more details, please contact your nearest Sales Office or the CS Center.

1-2. Performance Table

H Type Gearmotors/Gearmotors with Brake

[Notes]
- The output shaft speed is the value relative to the synchronous speed of the motor and the reduction ratio.
- Three output shaft types, L, R, and T, are available for the H Type.
- Allowable output shaft O.H.L. is the value at the middle of the output shaft.
- The "*" mark indicates a limited torque type. Please make sure to check the allowable output shaft torque in the performance table.
- The reduction ratio in ▭ in the performance table indicates that the output shaft rotates in the directions shown below when the connection is made as shown on page 546 (CW). (Refer to the figure on the right)
  3-phase: L shaft in the CW direction and R and T shafts in the CCW direction when viewed from the output shaft side
  1-phase: L shaft in the CCW direction and R and T shafts in the CW direction when viewed from the output shaft side

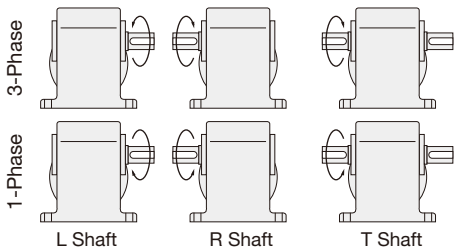

Series	Motor Power	Frame Size	Reduction Ratio	Actual Reduction Ratio	Output Shaft Speed r/min 50 Hz	Output Shaft Speed r/min 60 Hz	Allowable Output Shaft Torque N·m	Allowable Output Shaft O.H.L. N	Drawings Foot Mount	Drawings Flange Mount
MINI	15 W	15	1/10	1/10	150	180	0.69	343	P.254	P.270
			1/15	1/15	100	120	0.98	441		
			1/20	1/20	75	90	1.27	539		
			1/25	1/25	60	72	1.67	588		
			1/30	1/30	50	60	1.96	686		
			1/40	1/40	37.5	45	2.65	784		
			1/50	1/50	30	36	3.33	882		
			1/60	1/60	25	30	3.92	882		
			1/80	1/80	18.8	22.5	5.00	980		
			1/100	1/100	15	18	6.27	980		
			1/120	1/120	12.5	15	7.45	1080		
			1/160	1/160	9.4	11.2	9.80	1080		
			1/200	1/200	7.5	9	12.7	1080		
			1/240	1/240	6.3	7.5	14.7	1080		
		22	1/300	1/300	5	6	16.7	1760	P.256	P.272
			1/375	1/375	4	4.8	20.6	1760		
			1/450	2/885	3.3	4	25.5	1760		
			1/600	1/600	2.5	3	33.3	1760		
			1/750	1/750	2	2.4	42.1	1760		
			1/900	1/885	1.7	2	50.0	1760		
			1/1200	1/1160	1.3	1.5	66.6	1760		
			1/1500	1/1450	1	1.2	83.3	1760		
			1/1800	1/1711	0.8	1	98.0	1760		
	25 W	15	1/10	4/41	150	180	1.08	343	P.254	P.270
			1/15	8/123	100	120	1.67	441		
			1/20	2/41	75	90	2.25	539		
			1/25	8/205	60	72	2.74	588		
			1/30	4/123	50	60	3.33	686		
			1/40	1/41	37.5	45	4.41	784		
			1/50	4/205	30	36	5.49	882		
			1/60	20/1189	25	30	6.66	882		
			1/80	1/82	18.8	22.5	8.43	980		
			1/100	2/205	15	18	10.8	980		
			1/120	1/123	12.5	15	12.7	1080		
			1/160	1/164	9.4	11.2	16.7	1080		
			1/200	1/205	7.5	9	20.6	1080		
			1/240	5/1189	6.3	7.5	25.5	1080		
		22	1/300	1/300	5	6	28.4	1760	P.256	P.272
			1/375	1/375	4	4.8	35.3	1760		
			1/450	2/885	3.3	4	42.1	1760		
			1/600	1/600	2.5	3	55.9	1760		
			1/750	1/750	2	2.4	69.6	1760		
			1/900	1/885	1.7	2	84.3	1760		
		28	1/1200	1/1160	1.3	1.5	108	2740	P.259	-
			1/1500	1/1450	1	1.2	137	2740		
			1/1800	1/1711	0.8	1	167	2740		

Series	Motor Power	Frame Size	Reduction Ratio	Actual Reduction Ratio	Output Shaft Speed r/min		Allowable Output Shaft Torque	Allowable Output Shaft O.H.L.	Drawings	
					50 Hz	60 Hz	N·m	N	Foot Mount	Flange Mount
MINI	40 W	15	1/10	4/41	150	180	1.76	343	P.254	P.270
			1/15	8/123	100	120	2.65	441		
			1/20	2/41	75	90	3.53	539		
			1/25	8/205	60	72	4.41	588		
			1/30	4/123	50	60	5.29	686		
			1/40	1/41	37.5	45	7.06	784		
			1/50	4/205	30	36	8.82	882		
			1/60	20/1189	25	30	10.8	882		
			1/80	1/82	18.8	22.5	13.7	980		
			1/100	2/205	15	18	16.7	980		
			1/120	1/123	12.5	15	20.6	1080		
		18	1/160	1/164	9.4	11.2	26.5	1370	P.255	P.271
			1/200	1/205	7.5	9	33.3	1370		
			1/240	1/246	6.3	7.5	40.2	1370		
		22	1/300	1/300	5	6	45.1	1760	P.256	P.272
			1/375	1/375	4	4.8	55.9	1760		
			1/450	2/885	3.3	4	67.6	1760		
		28	1/600	1/600	2.5	3	90.2	1760	P.259	-
			1/750	1/750	2	2.4	118	2740		
			1/900	1/885	1.7	2	137	2740		
		32	1/1200	1/1200	1.3	1.5	176	5100	P.262	-
			1/1500	1/1500	1	1.2	225	5100		
			1/1800	1/1800	0.8	1	274	5100		
	60 W	15 (Note 1)	1/10	4/41	150	180	2.74	343	P.254	P.270
			1/15	8/123	100	120	4.12	441		
			1/20	2/41	75	90	5.49	539		
			1/25	8/205	60	72	6.96	588		
			1/30	4/123	50	60	8.33	686		
			1/40	1/41	37.5	45	10.8	784		
			1/50	4/205	30	36	13.7	882		
			1/60	20/1189	50	30	16.7	882		
		18 (Note 1)	1/10	4/41	150	180	2.74	343	P.255	P.271
			1/15	8/123	100	120	4.12	441		
			1/20	2/41	75	90	5.49	539		
			1/25	8/205	60	72	6.96	588		
			1/30	4/123	50	60	8.33	686		
			1/40	1/41	37.5	45	10.8	784		
			1/50	4/205	30	36	13.7	882		
			1/60	2/123	25	30	16.7	882		
		18	1/80	1/82	18.8	22.5	20.6	1270	P.255	P.271
			1/100	2/205	15	18	26.5	1270		
			1/120	1/123	12.5	15	31.4	1370		
			1/160	1/164	9.4	11.2	42.1	1370		
			1/200	1/205	7.5	9	52.9	1370		
			* 1/240	1/246	6.3	7.5	53.9	1370		
		22	1/300	1/300	5	6	70.6	1760	P.256	P.272
			1/375	1/375	4	4.8	88.2	1760		
			1/450	2/885	3.3	4	108	1760		
		28	1/600	1/600	2.5	3	137	2740	P.259	-
			1/750	1/750	2	2.4	176	2740		
			1/900	1/885	1.7	2	216	2740		
		32	1/1200	1/1200	1.3	1.5	284	5100	P.262	-
			1/1500	1/1500	1	1.2	353	5100		
			1/1800	1/1800	0.8	1	421	5100		

Note 1: Please note that with regard to reduction ratios of 1/10 to 1/30 of 60 W gearmotors, the frame size for Three-phase standard voltages (200 V class) is 15, but the frame size for Three-phase high voltage (400 V class) and Single-phase voltages is 18.

Series	Motor Power	Frame Size	Reduction Ratio	Actual Reduction Ratio	Output Shaft Speed r/min		Allowable Output Shaft Torque	Allowable Output Shaft O.H.L.	Drawings	
					50 Hz	60 Hz	N·m	N	Foot Mount	Flange Mount
MINI	90 W	18	1/10	4/41	150	180	4.12	441	P.255	P.271
			1/15	8/123	100	120	6.17	588		
			1/20	2/41	75	90	8.33	735		
			1/25	8/205	60	72	10.8	882		
			1/30	4/123	50	60	12.7	980		
			1/40	1/41	37.5	45	16.7	1080		
			1/50	4/205	30	36	20.6	1180		
			1/60	2/123	25	30	24.5	1180		
			1/80	1/82	18.8	22.5	31.4	1270		
			1/100	2/205	15	18	39.2	1270		
			1/120	1/123	12.5	15	47.0	1370		
			* 1/160	1/164	9.4	11.2	53.9	1370		
			* 1/200	1/205	7.5	9	53.9	1370		
			* 1/240	1/246	6.3	7.5	53.9	1370		
		28	1/300	1/300	5	6	108	2740	P.259	-
			1/375	1/375	4	4.8	137	2740		
			1/450	2/885	3.3	4	157	2740		
		32	1/600	1/600	2.5	3	216	5100	P.262	-
			1/750	1/750	2	2.4	265	5100		
			1/900	1/900	1.7	2	314	5100		
		40	1/1200	1/1200	1.3	1.5	421	7060	P.265	-
			1/1500	1/1500	1	1.2	529	7060		
			1/1800	1/1800	0.8	1	637	7060		

Note 1: Please be sure to read the notes on page 246.

H2 Type Gearmotors/Gearmotors with Brake

[Notes]
- The values in parentheses ( ) in the drawings are the indications for gearmotors with brake.
- The output shaft speed is the value relative to the synchronous speed of the motor and the reduction ratio.
- In the performance table, ▭ indicates that the L shaft rotates clockwise and the R and T shafts rotate counterclockwise when viewed from the output shaft direction when the connection is made as shown on page 547 (CW). (Refer to the figure on the right)
- Allowable output shaft O.H.L. is the value at the middle of the output shaft.
- The "*" mark indicates a limited torque type. Please make sure to check the allowable output shaft torque in the performance table.

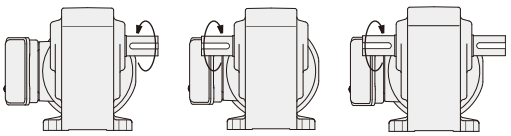

L Shaft R Shaft T Shaft

Series	Motor Power	Frame Size	Reduction Ratio	Actual Reduction Ratio	Output Shaft Speed r/min		Allowable Output Shaft Torque N·m		Allowable Output Shaft O.H.L.	Drawings	
					50 Hz	60 Hz	50 Hz	60 Hz	N	Foot Mount	Flange Mount
MID	3-Phase 0.1 kW	22	1/5	1/5	300	360	2.8	2.4	588	P.257	P.273
			1/10	1/10	150	180	5.7	4.8	931		
			1/15	1/15	100	120	8.6	7.2	1030		
			1/20	1/20	75	90	12	9.5	1180		
			1/25	1/25	60	72	15	12	1270		
			1/30	1/30	50	60	18	15	1370		
			1/40	1/40	37.5	45	23	19	1570		
			1/50	1/50	30	36	28	24	1720		
			1/60	1/59	25	30	34	28	1760		
			1/80	1/80	18.8	22.5	44	37	1760		
			1/100	1/100	15	18	55	46	1760		
			1/120	1/120	12.5	15	67	55	1760		
			1/160	1/160	9.4	11.2	88	74	1760		
			1/200	1/200	7.5	9	111	92	1760		
			* 1/240	1/236	6.3	7.5	118	111	1760		
		28	1/300	7/2120	5	6	145	121	2840	P.260	-
			1/375	7/2650	4	4.8	181	151	2840		
			1/450	7/3127	3.3	4	218	181	2840		
		32	1/600	7/4240	2.5	3	286	238	4120	P.263	-
			1/750	7/5300	2	2.4	358	298	4120		
			1/900	7/6360	1.7	2	429	358	4120		
			* 1/1200	7/8480	1.3	1.5	431	431	4120		
			* 1/1500	7/10600	1	1.2	431	431	4120		
	3-Phase 0.2 kW	22	1/5	1/5	300	360	5.7	4.8	588	P.257	P.273
			1/10	1/10	150	180	12	9.5	931		
			1/15	1/15	100	120	18	15	1030		
			1/20	1/20	75	90	23	19	1180		
			1/25	1/25	60	72	28	24	1270		
			1/30	1/30	50	60	34	28	1370		
			1/40	1/40	37.5	45	46	38	1570		
			1/50	1/50	30	36	57	48	1720		
			1/60	1/59	25	30	69	57	1810		
		28	1/80	1/80	18.8	22.5	88	74	2450	P.260	-
			1/100	1/100	15	18	111	92	2650		
			1/120	1/120	12.5	15	133	111	2740		
			1/160	1/160	9.4	11.2	177	148	2840		
			1/200	1/200	7.5	9	221	184	2840		
			1/240	1/236	6.3	7.5	245	221	2840		
		32	1/300	7/2120	5	6	294	245	3820	P.263	-
			1/375	7/2650	4	4.8	368	306	4120		
			1/450	7/3127	3.3	4	431	368	4120		
		40	1/600	7/4240	2.5	3	588	490	6760	P.266	-
			1/750	7/5300	2	2.4	735	613	6760		
			* 1/900	7/6360	1.7	2	764	735	6760		
			* 1/1200	7/8480	1.3	1.5	764	764	6760		
			* 1/1500	7/10600	1	1.2	764	764	6760		

Series	Motor Power	Frame Size	Reduction Ratio	Actual Reduction Ratio	Output Shaft Speed r/min		Allowable Output Shaft Torque N·m		Allowable Output Shaft O.H.L.	Drawings
					50 Hz	60 Hz	50 Hz	60 Hz	N	Foot Mount
MID	3-Phase 0.4 kW	28	1/5	1/5	300	360	12	9.5	931	P.260
			1/10	1/10	150	180	23	19	1470	
			1/15	1/15	100	120	34	28	1670	
			1/20	1/20	75	90	46	38	1860	
			1/25	1/25	60	72	57	48	2010	
			1/30	1/30	50	60	69	57	2210	
			1/40	1/40	37.5	45	92	76	2450	
			1/50	1/50	30	36	115	95	2650	
			1/60	1/59	25	30	137	115	2740	
		32	1/80	1/80	18.8	22.5	177	148	3430	P.263
			1/100	1/100	15	18	221	184	3820	
			1/120	1/120	12.5	15	266	221	4120	
			1/160	1/160	9.4	11.2	355	295	4120	
			1/200	1/200	7.5	9	431	369	4120	
			* 1/240	1/236	6.3	7.5	431	431	4120	
		40	1/300	7/2080	5	6	572	477	6760	P.266
			1/375	7/2600	4	4.8	715	597	6760	
			* 1/450	7/3120	3.3	4	764	715	6760	
		50	1/600	21/12220	2.5	3	1150	955	9510	P.268
			* 1/750	1/728	2	2.4	1230	1190	9510	
			* 1/900	7/6240	1.7	2	1230	1230	9510	
			* 1/1200	21/24440	1.3	1.5	1230	1230	9510	
			* 1/1500	1/1456	1	1.2	1230	1230	9510	
	3-Phase 0.75 kW	32	1/5	1/5	300	360	22	18	1520	P.263
			1/10	1/10	150	180	43	36	2010	
			1/15	1/15	100	120	65	54	2210	
			1/20	1/20	75	90	86	72	2450	
			1/25	1/25	60	72	108	89	2740	
			1/30	1/30	50	60	128	107	2940	
			1/40	1/40	37.5	45	172	143	3430	
			1/50	1/50	30	36	215	179	3820	
			1/60	1/59	25	30	258	215	4120	
		40	1/80	1/80	18.8	22.5	332	277	5780	P.266
			1/100	1/100	15	18	416	346	6080	
			1/120	1/120	12.5	15	498	415	6270	
			1/160	1/160	9.4	11.2	664	554	6470	
			* 1/200	1/200	7.5	9	764	692	6660	
			* 1/240	1/240	6.3	7.5	764	764	6660	
		50	1/300	7/2120	5	6	1070	895	7740	P.268
			* 1/375	7/2650	4	4.8	1230	1120	8040	
			* 1/450	7/3180	3.3	4	1230	1230	8530	

Note 1: Please be sure to read the notes on page 249.

Series	Motor Power	Frame Size	Reduction Ratio	Actual Reduction Ratio	Output Shaft Speed r/min		Allowable Output Shaft Torque N·m		Allowable Output Shaft O.H.L.	Drawings
					50 Hz	60 Hz	50 Hz	60 Hz	N	Foot Mount
MID	3-Phase 1.5 kW	40	1/ 5	1/5	300	360	43	36	2650	P.266
			1/ 10	1/10	150	180	86	72	3530	
			1/ 15	1/15	100	120	128	107	4410	
			1/ 20	1/20	75	90	172	143	4700	
			1/ 25	1/25	60	72	215	179	5100	
			1/ 30	1/30	50	60	258	215	5290	
			1/ 40	1/40	37.5	45	344	277	5590	
			1/ 50	1/50	30	36	429	346	5880	
			1/ 60	1/60	25	30	515	415	6080	
		50	1/ 80	3/235	18.8	22.5	664	554	8530	P.268
			1/100	1/98	15	18	830	692	8820	
			1/120	1/120	12.5	15	1000	830	9020	
			* 1/160	3/470	9.4	11.2	1230	1110	9310	
			* 1/200	1/196	7.5	9	1230	1230	9510	
			* 1/240	1/240	6.3	7.5	1230	1230	9510	
	3-Phase 2.2 kW	50	1/5	1/5	300	360	63	53	3920	P.268
			1/10	1/10	150	180	126	105	4410	
			1/15	1/15	100	120	189	157	4900	
			1/20	12/235	75	90	252	210	5490	
			1/25	2/49	60	72	315	263	6080	
			1/30	1/30	50	60	378	315	6570	
			1/40	1/40	37.5	45	487	406	7060	
			1/50	1/50	30	36	609	507	7550	
			1/60	1/60	25	30	731	609	8130	
			1/80	3/235	18.8	22.5	974	812	8430	
			1/100	1/98	15	18	1220	1010	8820	
			* 1/120	1/120	12.5	15	1230	1220	8820	

Note 1: Please be sure to read the notes on page 249.

H2 Type Gearmotors/Gearmotors with Brake

[Notes]
- The values in parentheses ( ) in the drawings are the indications for gearmotors with brake.
- The output shaft speed is the value relative to the synchronous speed of the motor and the reduction ratio.
- In the performance table, ▭ indicates that the L shaft rotates clockwise and the R and T shafts rotate counterclockwise when viewed from the output shaft side when the connection is made as shown on page 548 (CW). (Refer to the figure on the right)
- The startup torque of the single-phase 0.1 kW motor is 60 to 80 % because a capacitor run motor is adopted.
- Allowable output shaft O.H.L. is the value at the middle of the output shaft.
- The "*" mark indicates a limited torque type. Please make sure to check the allowable output shaft torque in the performance table.

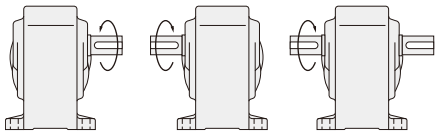

L Shaft R Shaft T Shaft

Series	Motor Power	Frame Size	Reduction Ratio	Actual Reduction Ratio	Output Shaft Speed r/min		Allowable Output Shaft Torque N·m		Allowable Output Shaft O.H.L. N	Drawings	
					50 Hz	60 Hz	50 Hz	60 Hz		Foot Mount	Flange Mount
MID	1-Phase 0.1 kW	22	1/5	1/5	300	360	2.8	2.4	588	P.258	P.274
			1/10	1/10	150	180	5.7	4.8	931		
			1/15	1/15	100	120	8.6	7.2	1030		
			1/20	1/20	75	90	12	9.5	1180		
			1/25	1/25	60	72	15	12	1270		
			1/30	1/30	50	60	18	15	1370		
			1/40	1/40	37.5	45	23	19	1570		
			1/50	1/50	30	36	28	24	1720		
			1/60	1/59	25	30	34	28	1760		
			1/80	1/80	18.8	22.5	44	37	1760		
			1/100	1/100	15	18	55	46	1760		
			1/120	1/120	12.5	15	67	55	1760		
			1/160	1/160	9.4	11.2	88	74	1760		
			1/200	1/200	7.5	9	111	92	1760		
			* 1/240	1/236	6.3	7.5	118	111	1760		
	1-Phase 0.2 kW	22	1/5	1/5	300	360	5.7	4.8	588	P.258	P.274
			1/10	1/10	150	180	12	9.5	931		
			1/15	1/15	100	120	18	15	1030		
			1/20	1/20	75	90	23	19	1180		
			1/25	1/25	60	72	28	24	1270		
			1/30	1/30	50	60	34	28	1370		
			1/40	1/40	37.5	45	46	38	1570		
			1/50	1/50	30	36	57	48	1720		
			1/60	1/59	25	30	69	57	1810		
		28	1/80	1/80	18.8	22.5	88	74	2450	P.261	-
			1/100	1/100	15	18	111	92	2650		
			1/120	1/120	12.5	15	133	111	2740		
			1/160	1/160	9.4	11.2	177	148	2840		
			1/200	1/200	7.5	9	221	184	2840		
			1/240	1/236	6.3	7.5	245	221	2840		
		32	1/300	7/2120	5	6	294	245	3820	P.264	-
			1/375	7/2650	4	4.8	368	306	4120		
			1/450	7/3127	3.3	4	431	368	4120		
		40	1/600	7/4240	2.5	3	588	490	6760	P.267	-
			1/750	7/5300	2	2.4	735	613	6760		
			* 1/900	7/6360	1.7	2	764	735	6760		
			* 1/1200	7/8480	1.3	1.5	764	764	6760		
			* 1/1500	7/10600	1	1.2	764	764	6760		

Series	Motor Power	Frame Size	Reduction Ratio	Actual Reduction Ratio	Output Shaft Speed		Allowable Output Shaft Torque		Allowable Output Shaft O.H.L.	Drawings	
					r/min		N·m		N	Foot Mount	Flange Mount
					50 Hz	60 Hz	50 Hz	60 Hz			
MID	1-Phase 0.4 kW	28	1/5	1/5	300	360	12	9.5	931	P.261	-
			1/10	1/10	150	180	23	19	1470		
			1/15	1/15	100	120	34	28	1670		
			1/20	1/20	75	90	46	38	1860		
			1/25	1/25	60	72	57	48	2010		
			1/30	1/30	50	60	69	57	2210		
			1/40	1/40	37.5	45	92	76	2450		
			1/50	1/50	30	36	115	95	2650		
			1/60	1/59	25	30	137	115	2740		
		32	1/80	1/80	18.8	22.5	177	148	3430	P.264	-
			1/100	1/100	15	18	221	184	3820		
			1/120	1/120	12.5	15	266	221	4120		
			1/160	1/160	9.4	11.2	355	295	4120		
			1/200	1/200	7.5	9	431	369	4120		
			* 1/240	1/236	6.3	7.5	431	431	4120		
		40	1/300	7/2080	5	6	572	477	6760	P.267	-
			1/375	7/2600	4	4.8	715	597	6760		
			* 1/450	7/3120	3.3	4	764	715	6760		
		50	1/600	21/12220	2.5	3	1150	955	9510	P.269	-
			* 1/750	1/728	2	2.4	1230	1190	9510		
			* 1/900	7/6240	1.7	2	1230	1230	9510		
			* 1/1200	21/24440	1.3	1.5	1230	1230	9510		
			* 1/1500	1/1456	1	1.2	1230	1230	9510		

1-3. Drawings

H Type Right Angle Shaft | Shaft Diameter **15** | **Foot** Mounting

The values in parentheses ( ) are the indications for gearmotors with brake.

<Figure 1>

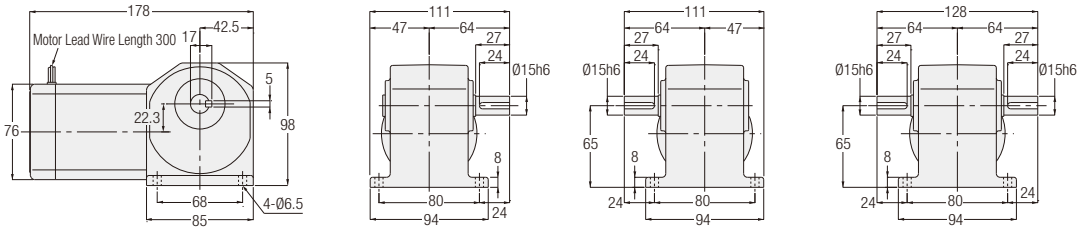

<Figure 2>

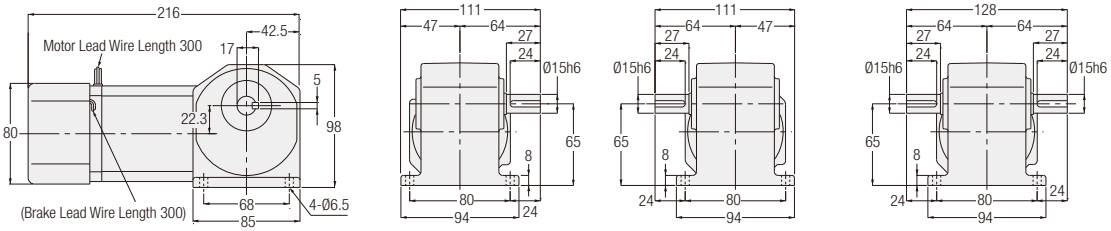

L Shaft R Shaft T Shaft

Number of Phases	Power	Part Number	Reduction Ratio	Figure Number	Brake	Approx. Weight (kg)
3-Phase	15 W	HLM-15#-***-T15	10, 15, 20, 25, 30, 40, 50, 60, 80, 100, 120, 160, 200, 240	1	No	3
		HLM-15#-***-T15W				
		HLMN-15#-***-T15	10, 15, 20, 25, 30, 40, 50, 60, 80, 100, 120, 160, 200, 240	2	Yes	3
		HLMN-15#-***-T15W				
	25 W	HLM-15#-***-T25	10, 15, 20, 25, 30, 40, 50, 60, 80, 100, 120, 160, 200, 240	1	No	3
		HLM-15#-***-T25W				
		HLMN-15#-***-T25	10, 15, 20, 25, 30, 40, 50, 60, 80, 100, 120, 160, 200, 240	2	Yes	3
		HLMN-15#-***-T25W				
	40 W	HLM-15#-***-T40	10, 15, 20, 25, 30, 40, 50, 60, 80, 100, 120	1	No	3
		HLM-15#-***-T40W		2		
		HLMN-15#-***-T40	10, 15, 20, 25, 30, 40, 50, 60, 80, 100, 120	2	Yes	3
		HLMN-15#-***-T40W				
	60 W	HLM-15#-***-T60	10, 15, 20, 25, 30, 40, 50, 60	2	No	3
		HLMN-15#-***-T60		2	Yes	
1-Phase	15 W	HLM-15#-***-S15	10, 15, 20, 25, 30, 40, 50, 60, 80, 100, 120, 160, 200, 240	1	No	3
		HLM-15#-***-S15W				
		HLMN-15#-***-S15	10, 15, 20, 25, 30, 40, 50, 60, 80, 100, 120, 160, 200, 240	2	Yes	3
		HLMN-15#-***-S15W				
	25 W	HLM-15#-***-S25	10, 15, 20, 25, 30, 40, 50, 60, 80, 100, 120, 160, 200, 240	1	No	3
		HLM-15#-***-S25W				
		HLMN-15#-***-S25	10, 15, 20, 25, 30, 40, 50, 60, 80, 100, 120, 160, 200, 240	2	Yes	3
		HLMN-15#-***-S25W				
	40 W	HLM-15#-***-S40	10, 15, 20, 25, 30, 40, 50, 60, 80, 100, 120	2	No	3
		HLM-15#-***-S40W				
		HLMN-15#-***-S40	10, 15, 20, 25, 30, 40, 50, 60, 80, 100, 120	2	Yes	3
		HLMN-15#-***-S40W				

Note: A shaft arrangement (L, R, T) will be indicated as # in the nomenclature. In addition, a reduction ratio will be indicated as ***.
Note: Please refer to page 246 for the performance table.

H Type Right Angle Shaft | Shaft Diameter **18** | **Foot** Mounting

The values in parentheses ( ) are the indications for gearmotors with brake.

<Figure 1>

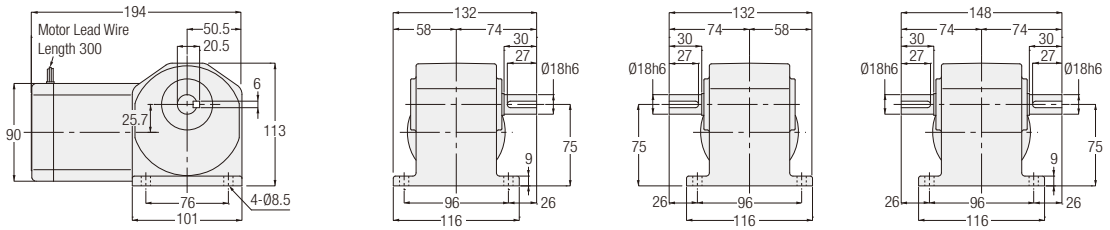

<Figure 2>

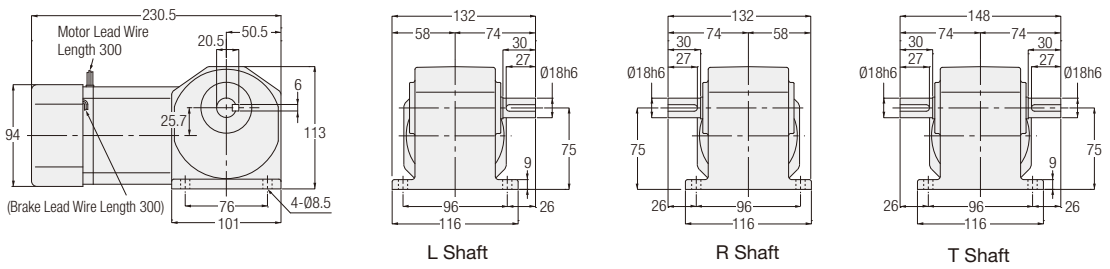

Number of Phases	Power	Part Number	Reduction Ratio	Figure Number	Brake	Approx. Weight (kg)
3-Phase	40 W	HLM-18#-***-T40	160, 200, 240	1	No	4
		HLM-18#-***-T40W				
		HLMN-18#-***-T40	160, 200, 240	2	Yes	4
		HLMN-18#-***-T40W				
	60 W	HLM-18#-***-T60	80, 100, 120, 160, 200, 240	1	No	4
		HLM-18#-***-T60W				
		HLMN-18#-***-T60	80, 100, 120, 160, 200, 240	2	Yes	4
		HLMN-18#-***-T60W				
	90 W	HLM-18#-***-T90	10, 15, 20, 25, 30, 40, 50, 60, 80, 100, 120, 160, 200, 240	1	No	4
		HLM-18#-***-T90W		2		
		HLMN-18#-***-T90	10, 15, 20, 25, 30, 40, 50, 60, 80, 100, 120, 160, 200, 240	2	Yes	4
		HLMN-18#-***-T90W				
1-Phase	40 W	HLM-18#-***-S40	160, 200, 240	1	No	4
		HLM-18#-***-S40W				
		HLMN-18#-***-S40	160, 200, 240	2	Yes	4
		HLMN-18#-***-S40W				
	60 W	HLM-18#-***-S60	10, 15, 20, 25, 30, 40, 50, 60, 80, 100, 120, 160, 200, 240	2	No	4
		HLM-18#-***-S60W				
		HLMN-18#-***-S60	80, 100, 120, 160, 200, 240	2	Yes	4
		HLMN-18#-***-S60W				
	90 W	HLM-18#-***-S90	10, 15, 20, 25, 30, 40, 50, 60, 80, 100, 120, 160, 200, 240	2	No	4
		HLM-18#-***-S90W				
		HLMN-18#-***-S90	10, 15, 20, 25, 30, 40, 50, 60, 80, 100, 120, 160, 200, 240	2	Yes	4
		HLMN-18#-***-S90W				

Note: A shaft arrangement (L, R, T) will be indicated as # in the nomenclature. In addition, a reduction ratio will be indicated as ***.
Note: Please refer to page 247 for the performance table.

H Type Right Angle Shaft | Shaft Diameter 22 | Foot Mounting

The values in parentheses ( ) are the indications for gearmotors with brake.

<Figure 1>

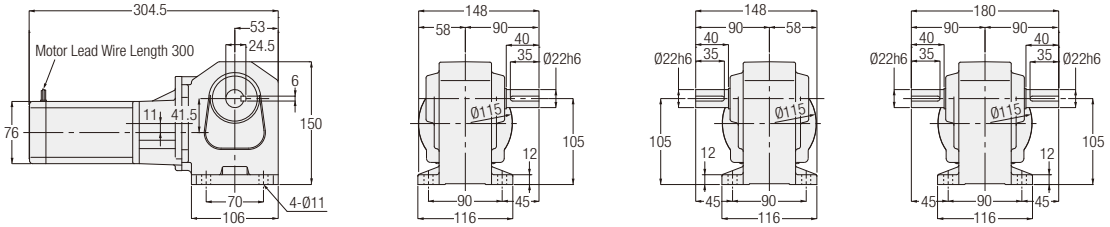

<Figure 2>

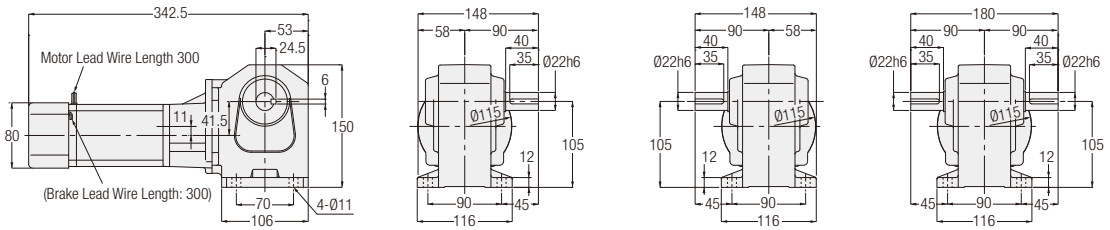

L Shaft R Shaft T Shaft

Number of Phases	Power	Part Number	Reduction Ratio	Figure Number	Brake	Approx. Weight (kg)
3-Phase	15 W	HLM-22#-***-T15	300, 375, 450, 600, 750, 900, 1200, 1500, 1800	1	No	6
		HLM-22#-***-T15W				
		HLMN-22#-***-T15	300, 375, 450, 600, 750, 900, 1200, 1500, 1800	2	Yes	6
		HLMN-22#-***-T15W				
	25 W	HLM-22#-***-T25	300, 375, 450, 600, 750, 900	1	No	6
		HLM-22#-***-T25W				
		HLMN-22#-***-T25	300, 375, 450, 600, 750, 900	2	Yes	6
		HLMN-22#-***-T25W				
	40 W	HLM-22#-***-T40	300, 375, 450	1	No	6
		HLM-22#-***-T40W		2		
		HLMN-22#-***-T40	300, 375, 450	2	Yes	6
		HLMN-22#-***-T40W				
	60 W	HLM-22#-***-T60	300, 375, 450	2	No	6
		HLM-22#-***-T60W				
		HLMN-22#-***-T60	300, 375, 450	2	Yes	6
		HLMN-22#-***-T60W				
1-Phase	15 W	HLM-22#-***-S15	300, 375, 450, 600, 750, 900, 1200, 1500, 1800	1	No	6
		HLM-22#-***-S15W				
		HLMN-22#-***-S15	300, 375, 450, 600, 750, 900, 1200, 1500, 1800	2	Yes	6
		HLMN-22#-***-S15W				
	25 W	HLM-22#-***-S25	300, 375, 450, 600, 750, 900	1	No	6
		HLM-22#-***-S25W				
		HLMN-22#-***-S25	300, 375, 450, 600, 750, 900	2	Yes	6
		HLMN-22#-***-S25W				
	40 W	HLM-22#-***-S40	300, 375, 450	2	No	6
		HLM-22#-***-S40W				
		HLMN-22#-***-S40	300, 375, 450	2	Yes	6
		HLMN-22#-***-S40W				
	60 W	HLM-22#-***-S60	300, 375, 450	2	No	6
		HLM-22#-***-S60W				
		HLMN-22#-***-S60	300, 375, 450	2	Yes	6
		HLMN-22#-***-S60W				

Note: A shaft arrangement (L, R, T) will be indicated as # in the nomenclature. In addition, a reduction ratio will be indicated as ***.
Note: Please refer to page 246 for the performance table.

H2 Type Right Angle Shaft | Shaft Diameter **22** | **Foot** Mounting

The values in parentheses ( ) are the indications for gearmotors with brake.

<Figure 1>

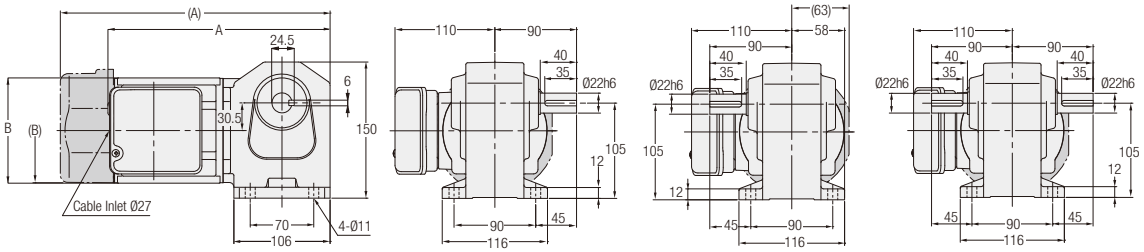

Number of Phases	Power	Part Number	Reduction Ratio	Figure Number	Brake	Approx. Weight (kg)	A	B
3-Phase	0.1 kW	H2L22####-MM01T◇◇TN	5, 10, 15, 20, 25, 30, 40, 50, 60, 80, 100, 120, 160, 200, 240	1	No	6.5	232	116
		H2L22####-MM01T◇◇TB◆			Yes	8	272	□126
	0.2 kW	H2L22####-MM02T◇◇TN	5, 10, 15, 20, 25, 30, 40, 50, 60	1	No	7.5	247	116
		H2L22####-MM02T◇◇TB◆			Yes	9	297.5	□126

Note: A shaft arrangement (L, R, T) will be indicated as # in the nomenclature. In addition, a reduction ratio will be indicated as ∗∗∗, a supply voltage/certification code will be indicated as ◇◇, and a brake specification will be indicated as ◆.

Note: Please refer to page 249 for the performance table.

H2 Type Right Angle Shaft | Shaft Diameter 22 | Foot Mounting

The values in parentheses ( ) are the indications for gearmotors with brake.

<Figure 1>

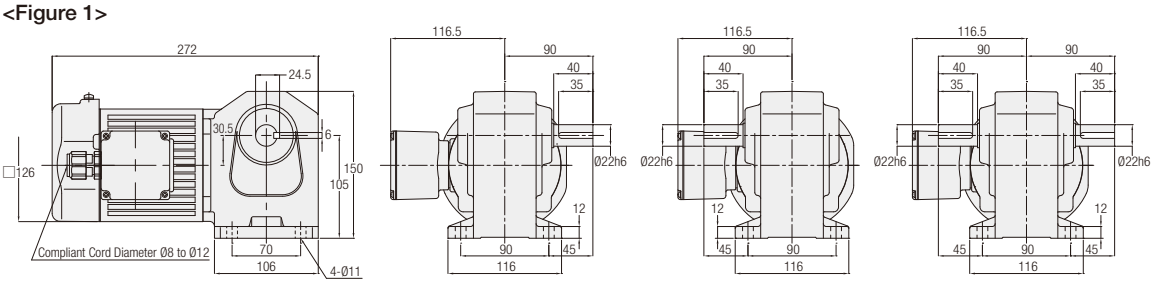

<Figure 2>

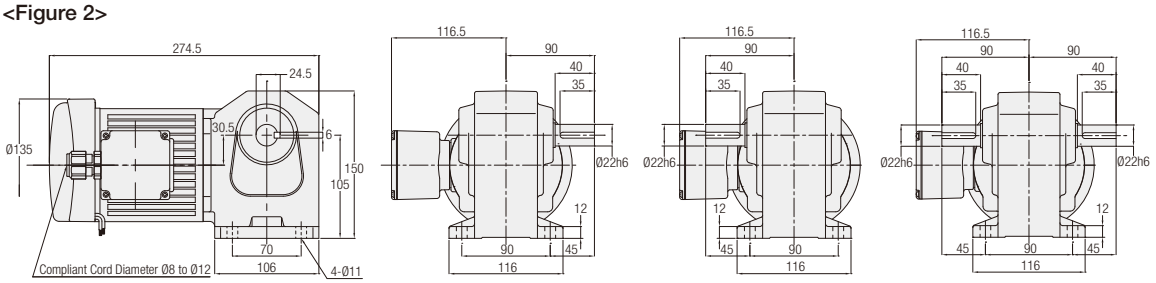

<Figure 3>

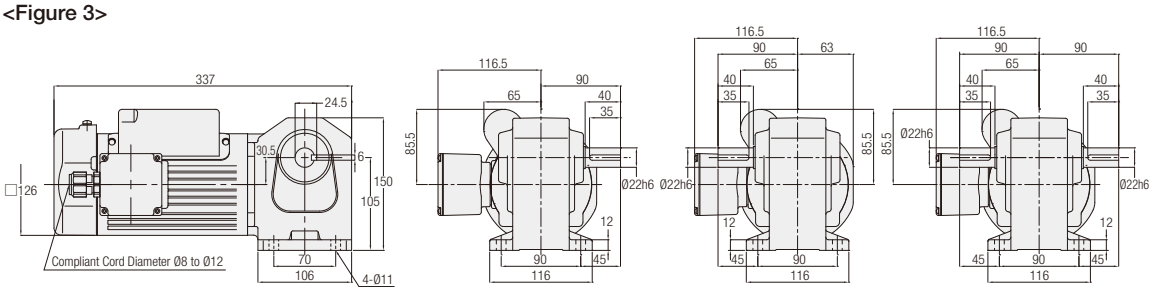

<Figure 4>

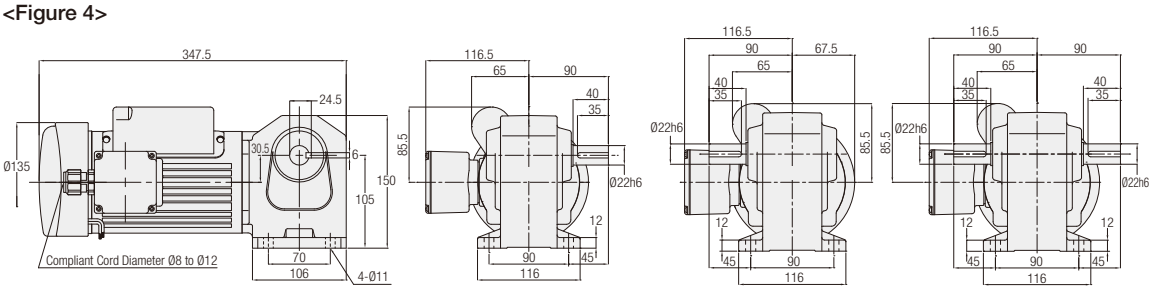

L Shaft R Shaft T Shaft

Number of Phases	Power	Part Number	Reduction Ratio	Figure Number	Brake	Approx. Weight (kg)
1-Phase	0.1 kW	H2L22####-MM01S◇JAN	5, 10, 15, 20, 25, 30, 40, 50, 60, 80, 100, 120, 160, 200, 240	1	No	7
		H2L22####-MM01S◇JAB2		2	Yes	8
	0.2 kW	H2L22####-MM02C◇JAN	5, 10, 15, 20, 25, 30, 40, 50, 60	3	No	9.5
		H2L22####-MM02C◇JAB2		4	Yes	11

Note: A shaft arrangement (L, R, T) will be indicated as # in the nomenclature. In addition, a reduction ratio will be indicated as *** and a supply voltage code will be indicated as ◇.

Note: Please refer to page 252 for the performance table.

H Type Right Angle Shaft | Shaft Diameter **28** | **Foot** Mounting

The values in parentheses ( ) are the indications for gearmotors with brake.

<Figure 1>

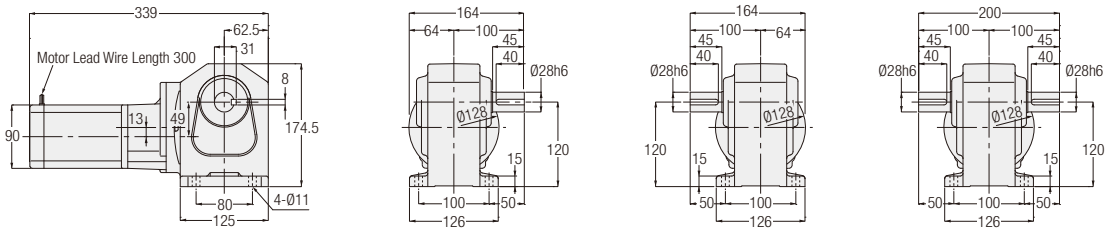

<Figure 2>

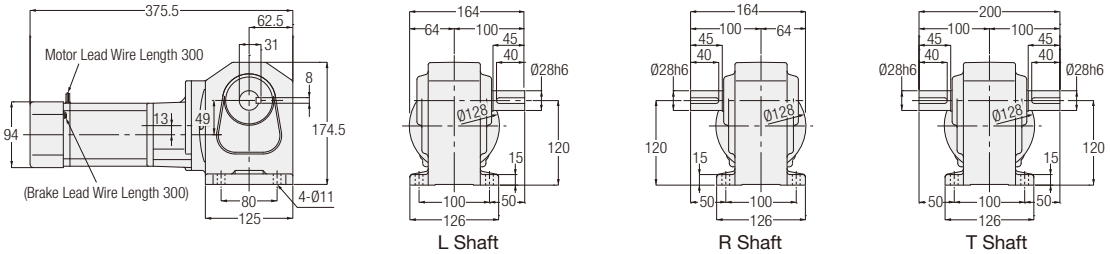

Number of Phases	Power	Part Number	Reduction Ratio	Figure Number	Brake	Approx. Weight (kg)
3-Phase	25 W	HLM-28#-***-T25	1200, 1500, 1800	1	No	9
		HLM-28#-***-T25W				
		HLMN-28#-***-T25	1200, 1500, 1800	2	Yes	9
		HLMN-28#-***-T25W				
	40 W	HLM-28#-***-T40	600, 750, 900	1	No	9
		HLM-28#-***-T40W				
		HLMN-28#-***-T40	600, 750, 900	2	Yes	9
		HLMN-28#-***-T40W				
	60 W	HLM-28#-***-T60	600, 750, 900	1	No	9
		HLM-28#-***-T60W				
		HLMN-28#-***-T60	600, 750, 900	2	Yes	9
		HLMN-28#-***-T60W				
	90 W	HLM-28#-***-T90	300, 375, 450	1	No	9
		HLM-28#-***-T90W		2		
		HLMN-28#-***-T90	300, 375, 450	2	Yes	9
		HLMN-28#-***-T90W				
1-Phase	25 W	HLM-28#-***-S25	1200, 1500, 1800	1	No	9
		HLM-28#-***-S25W				
		HLMN-28#-***-S25	1200, 1500, 1800	2	Yes	9
		HLMN-28#-***-S25W				
	40 W	HLM-28#-***-S40	600, 750, 900	1	No	9
		HLM-28#-***-S40W				
		HLMN-28#-***-S40	600, 750, 900	2	Yes	9
		HLMN-28#-***-S40W				
	60 W	HLM-28#-***-S60	600, 750, 900	2	No	9
		HLM-28#-***-S60W				
		HLMN-28#-***-S60	600, 750, 900	2	Yes	9
		HLMN-28#-***-S60W				
	90 W	HLM-28#-***-S90	300, 375, 450	2	No	9
		HLM-28#-***-S90W				
		HLMN-28#-***-S90	300, 375, 450	2	Yes	9
		HLMN-28#-***-S90W				

Note: A shaft arrangement (L, R, T) will be indicated as # in the nomenclature. In addition, a reduction ratio will be indicated as ***.
Note: Please refer to page 246 for the performance table.

H2 Type Right Angle Shaft | Shaft Diameter 28 | Foot Mounting

The values in parentheses ( ) are the indications for gearmotors with brake.

<Figure 1>

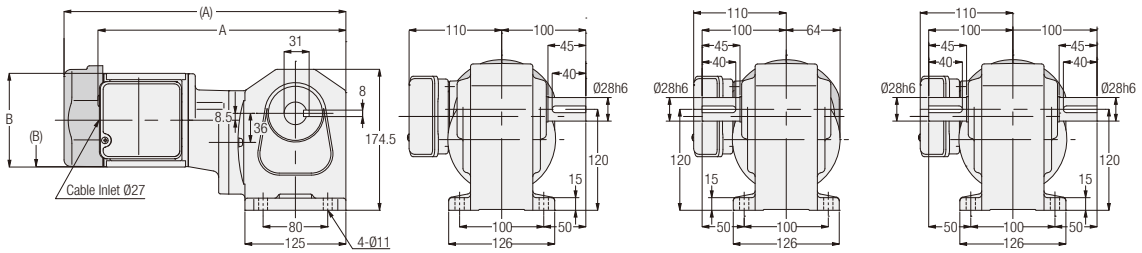

<Figure 2>

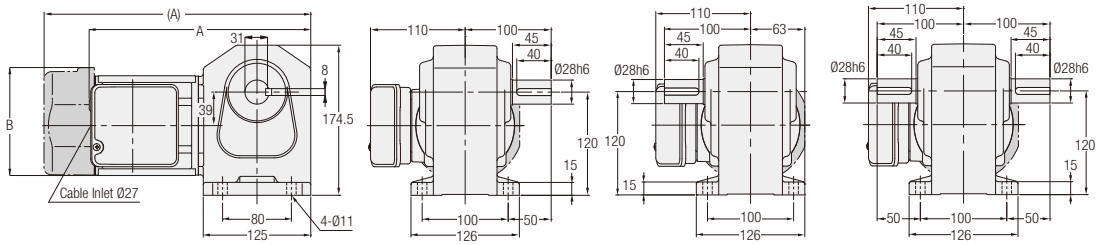

<Figure 3>

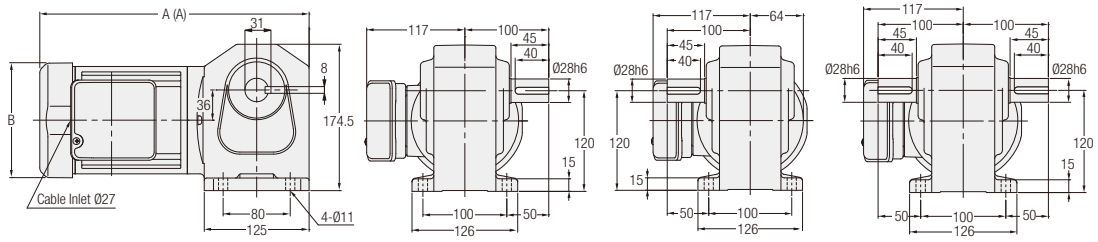

L Shaft R Shaft T Shaft

Number of Phases	Power	Part Number	Reduction Ratio	Figure Number	Brake	Approx. Weight (kg)	A	B
3-Phase	0.1 kW	H2L28####-MM01T◇◇TN	300, 375, 450	1	No	10	309	Ø115
		H2L28####-MM01T◇◇TB◆			Yes	11.5	349	□126
	0.2 kW	H2L28####-MM02T◇◇TN	80, 100, 120, 160, 200, 240	2	No	9.5	259.5	Ø115
		H2L28####-MM02T◇◇TB◆			Yes	11	310	□126
	0.4 kW	H2L28####-MM04T◇◇TN	5, 10, 15, 20, 25, 30, 40, 50, 60	3	No	11	321	□137
		H2L28####-MM04T◇◇TB◆			Yes	12.5	341	□137

Note: A shaft arrangement (L, R, T) will be indicated as # in the nomenclature. In addition, a reduction ratio will be indicated as ***, a supply voltage/certification code will be indicated as ◇◇, and a brake specification will be indicated as ◆.

Note: Please refer to page 249 for the performance table.

H2 Type Right Angle Shaft | Shaft Diameter **28** | **Foot** Mounting

The values in parentheses ( ) are the indications for gearmotors with brake.

<Figure 1>

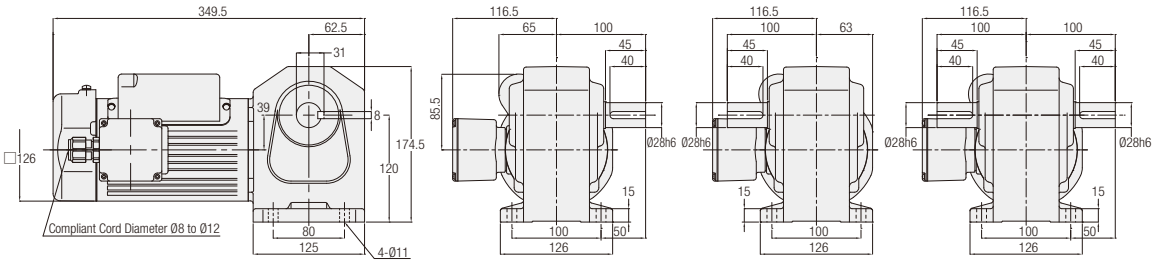

<Figure 2>

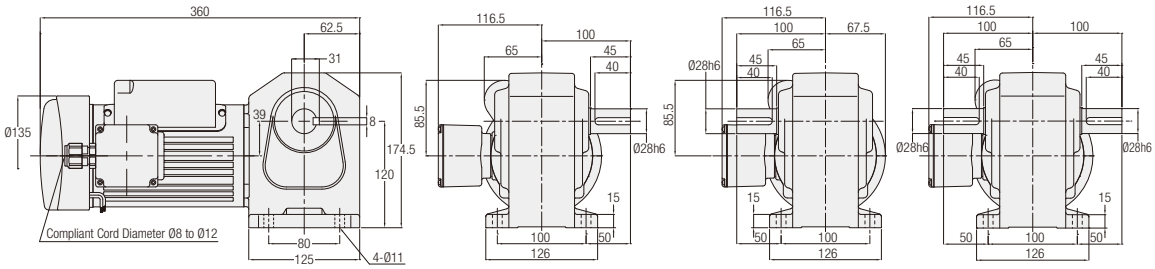

<Figure 3>

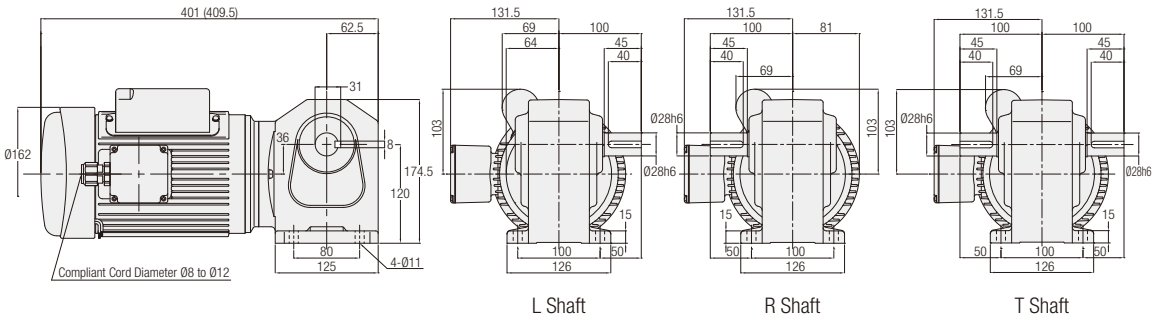

L Shaft R Shaft T Shaft

Number of Phases	Power	Part Number	Reduction Ratio	Figure Number	Brake	Approx. Weight (kg)
1-Phase	0.2 kW	H2L28####-MM02C◇JAN	80, 100, 120, 160, 200, 240	1	No	11.5
		H2L28####-MM02C◇JAB2	80, 100, 120, 160, 200, 240	2	Yes	13
	0.4 kW	H2L28####-MM04C◇JAN	5, 10, 15, 20, 25, 30, 40, 50, 60	3	No	16.5
		H2L28####-MM04C◇JAB2			Yes	19

Note: A shaft arrangement (L, R, T) will be indicated as # in the nomenclature. In addition, a reduction ratio will be indicated as *** and a supply voltage code will be indicated as ◇.

Note: Please refer to page 252 for the performance table.

H Type Right Angle Shaft | Shaft Diameter **32** | **Foot** Mounting

The values in parentheses ( ) are the indications for gearmotors with brake.

<Figure 1>

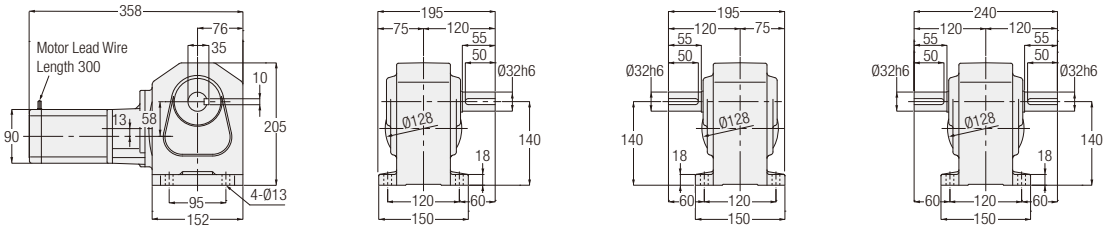

<Figure 2>

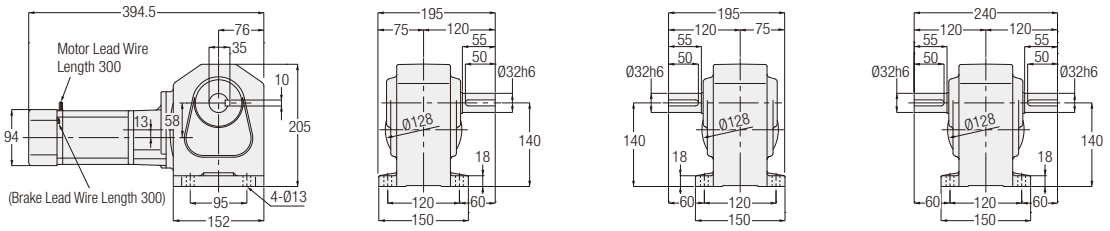

L Shaft R Shaft T Shaft

Number of Phases	Power	Part Number	Reduction Ratio	Figure Number	Brake	Approx. Weight (kg)
3-Phase	40 W	HLM-32#-***-T40	1200, 1500, 1800	1	No	15
		HLM-32#-***-T40W				
		HLMN-32#-***-T40	1200, 1500, 1800	2	Yes	15
		HLMN-32#-***-T40W				
	60 W	HLM-32#-***-T60	1200, 1500, 1800	1	No	15
		HLM-32#-***-T60W				
		HLMN-32#-***-T60	1200, 1500, 1800	2	Yes	15
		HLMN-32#-***-T60W				
	90 W	HLM-32#-***-T90	600, 750, 900	1	No	15
		HLM-32#-***-T90W		2		
		HLMN-32#-***-T90	600, 750, 900	2	Yes	15
		HLMN-32#-***-T90W				
1-Phase	40 W	HLM-32#-***-S40	1200, 1500, 1800	1	No	15
		HLM-32#-***-S40W				
		HLMN-32#-***-S40	1200, 1500, 1800	2	Yes	15
		HLMN-32#-***-S40W				
	60 W	HLM-32#-***-S60	1200, 1500, 1800	2	No	15
		HLM-32#-***-S60W				
		HLMN-32#-***-S60	1200, 1500, 1800	2	Yes	15
		HLMN-32#-***-S60W				
	90 W	HLM-32#-***-S90	600, 750, 900	2	No	15
		HLM-32#-***-S90W				
		HLMN-32#-***-S90	600, 750, 900	2	Yes	15
		HLMN-32#-***-S90W				

Note: A shaft arrangement (L, R, T) will be indicated as # in the nomenclature. In addition, a reduction ratio will be indicated as ***.
Note: Please refer to page 247 for the performance table.

H2 Type Right Angle Shaft | Shaft Diameter **32** | **Foot** Mounting

The values in parentheses ( ) are the indications for gearmotors with brake.

<Figure 1>

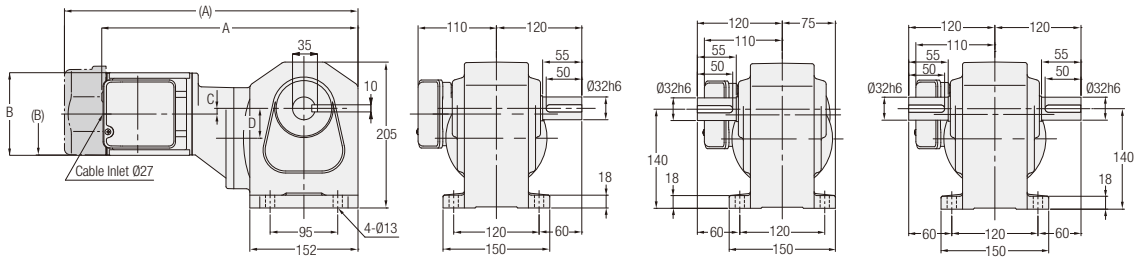

<Figure 2>

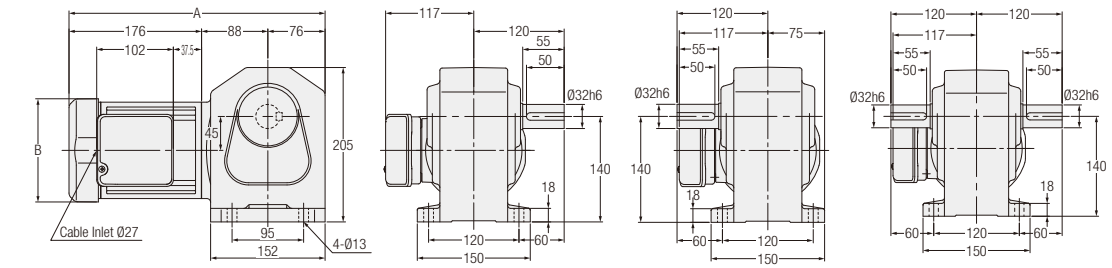

<Figure 3>

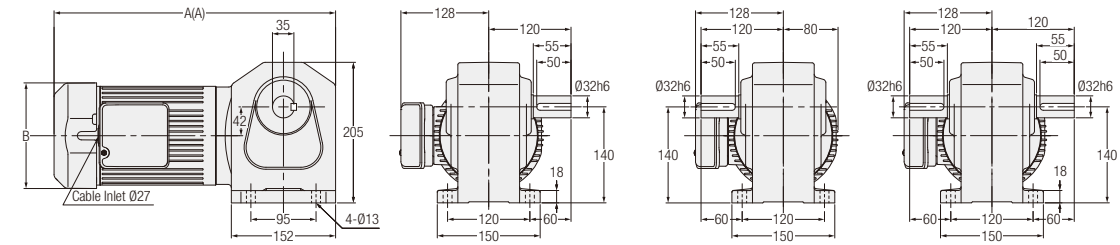

Number of Phases	Power	Part Number	Reduction Ratio	Figure Number	Brake	Approx. Weight (kg)	A	B	C	D
3-Phase	0.1 kW	H2L32####-MM01T◇◇TN	600, 750, 900, 1200, 1500	1	No	13	328	Ø115	17.5	45
		H2L32####-MM01T◇◇TB◆			Yes	14.5	368	□126	17.5	45
	0.2 kW	H2L32####-MM02T◇◇TN	300, 375, 450	1	No	13.5	362	Ø115	8	42
		H2L32####-MM02T◇◇TB◆			Yes	15	412.5	□126	8	42
	0.4 kW	H2L32####-MM04T◇◇TN	80, 100, 120, 160, 200, 240	2	No	14	340	□137	-	-
		H2L32####-MM04T◇◇TB◆			Yes	15.5	360	□137	-	-
	0.75 kW	H2L32####-MR08T◇◇TN	5, 10, 15, 20, 25, 30, 40, 50, 60	3	No	21	391.5	□154	-	-
		H2L32####-MR08T◇◇TB◆			Yes	23.5	410.5	□154	-	-

Note: A shaft arrangement (L, R, T) will be indicated as # in the nomenclature. In addition, a reduction ratio will be indicated as ***, a supply voltage/certification code will be indicated as ◇◇, and a brake specification will be indicated as ◆.

Note: Please refer to page 249 for the performance table.

H2 Type Right Angle Shaft | Shaft Diameter 32 | Foot Mounting

The values in parentheses ( ) are the indications for gearmotors with brake.

<Figure 1>

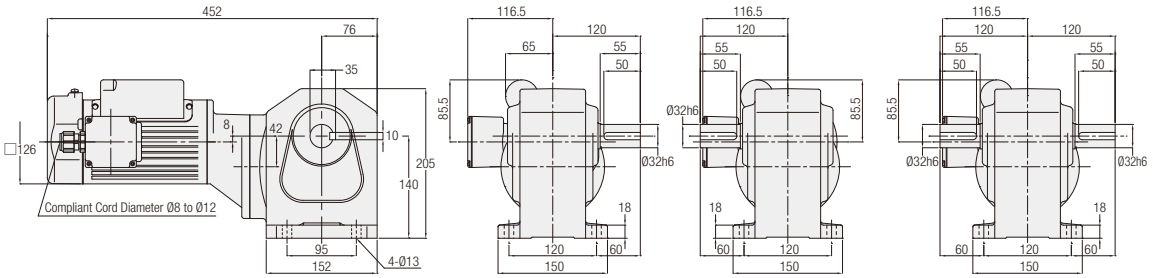

<Figure 2>

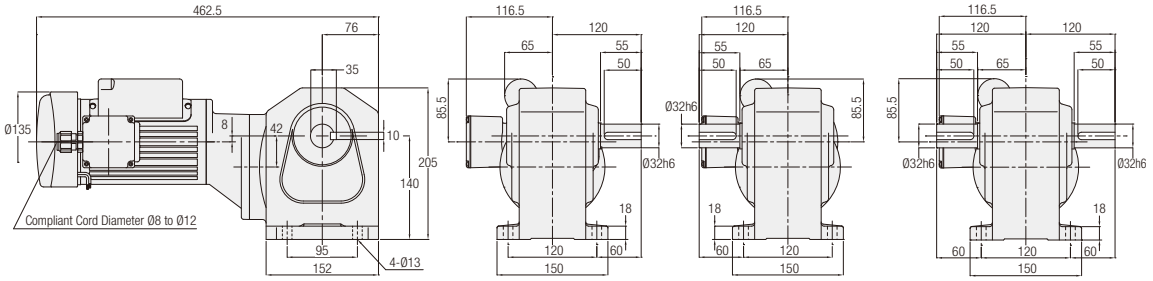

<Figure 3>

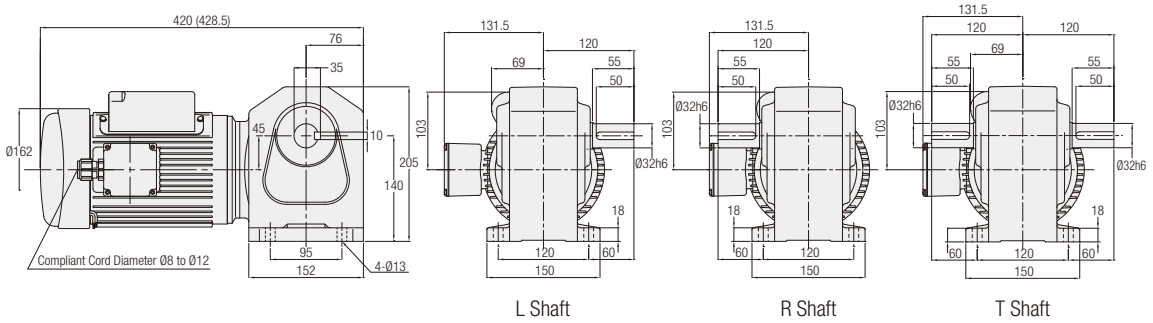

Number of Phases	Power	Part Number	Reduction Ratio	Figure Number	Brake	Approx. Weight (kg)
1-Phase	0.2 kW	H2L32#***-MM02C◇JAN	300, 375, 450	1	No	15.5
		H2L32#***-MM02C◇JAB2	300, 375, 450	2	Yes	17
	0.4 kW	H2L32#***-MM04C◇JAN	80, 100, 120, 160, 200, 240	3	No	19.5
		H2L32#***-MM04C◇JAB2			Yes	22

Note: A shaft arrangement (L, R, T) will be indicated as # in the nomenclature. In addition, a reduction ratio will be indicated as *** and a supply voltage code will be indicated as ◇.

Note: Please refer to page 252 for the performance table.

H Type Right Angle Shaft | Shaft Diameter **40** | **Foot** Mounting

The values in parentheses ( ) are the indications for gearmotors with brake.

<Figure 1>

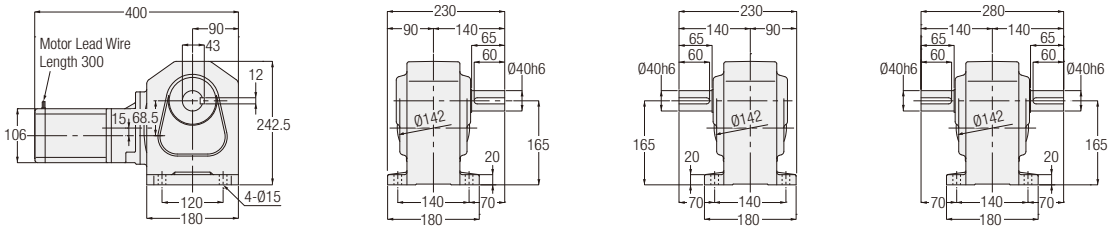

<Figure 2>

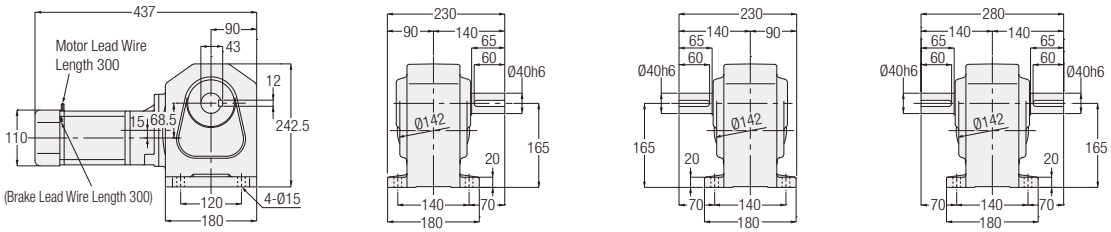

L Shaft R Shaft T Shaft

Number of Phases	Power	Part Number	Reduction Ratio	Figure Number	Brake	Approx. Weight (kg)
3-Phase	90 W	HLM-40#-***-T90	1200, 1500, 1800	1	No	22
		HLM-40#-***-T90W				
		HLMN-40#-***-T90	1200, 1500, 1800	2	Yes	22
		HLMN-40#-***-T90W				
1-Phase	90 W	HLM-40#-***-S90	1200, 1500, 1800	2	No	22
		HLM-40#-***-S90W				
		HLMN-40#-***-S90			Yes	22
		HLMN-40#-***-S90W				

Note: A shaft arrangement (L, R, T) will be indicated as # in the nomenclature. In addition, a reduction ratio will be indicated as ***.
Note: Please refer to page 248 for the performance table.

H2 Type Right Angle Shaft | Shaft Diameter **40** | **Foot** Mounting

The values in parentheses ( ) are the indications for gearmotors with brake.

<Figure 1>

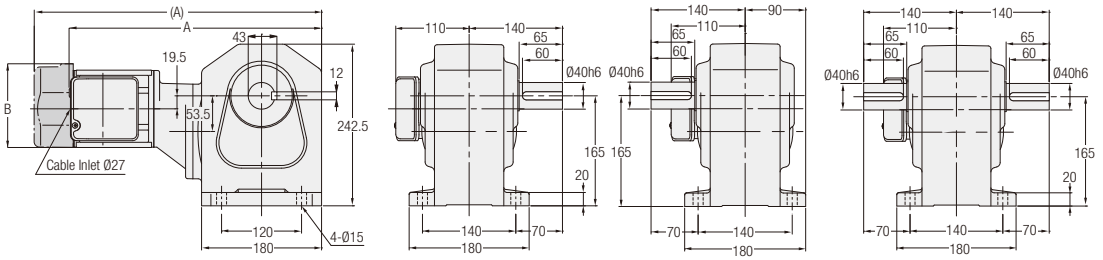

<Figure 2>

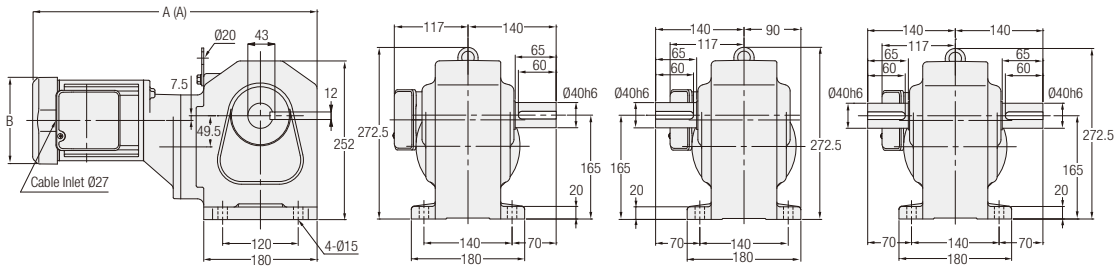

<Figure 3>

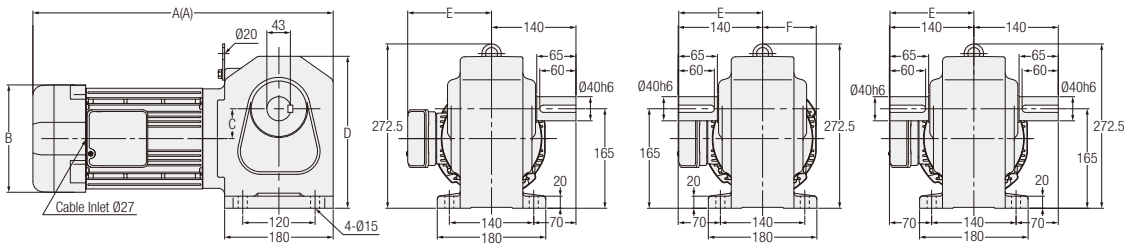

L Shaft R Shaft T Shaft

Note: Gearmotors with a motor power of 0.75 kW does not include the hanging plate.

Number of Phases	Power	Part Number	Reduction Ratio	Figure Number	Brake	Approx. Weight (kg)	A	B	C	D	E	F
3-Phase	0.2 kW	H2L40#***-MM02T◇◇TN	600, 750, 900, 1200, 1500	1	No	22	380.5	Ø115	-	-	-	-
		H2L40#***-MM02T◇◇TB◆			Yes	23.5	431	□126	-	-	-	-
	0.4 kW	H2L40#***-MM04T◇◇TN	300, 375, 450	2	No	24.5	451.5	□137	-	-	-	-
		H2L40#***-MM04T◇◇TB◆			Yes	26	471.5	□137	-	-	-	-
	0.75 kW	H2L40#***-MR08T◇◇TN	80, 100, 120, 160, 200, 240	3	No	29.5	410	□154	53.5	242.5	128	80
		H2L40#***-MR08T◇◇TB◆			Yes	32	429	□154	53.5	242.5	128	80
	1.5 kW	H2L40#***-MR15T◇◇TN	5, 10, 15, 20, 25, 30, 40, 50, 60	3	No	36.5	469	□178	49.5	252	139	89
		H2L40#***-MR15T◇◇TB◆			Yes	40	498	□178	49.5	252	139	89

Note: A shaft arrangement (L, R, T) will be indicated as # in the nomenclature. In addition, a reduction ratio will be indicated as ***, a supply voltage/certification code will be indicated as ◇◇, and a brake specification will be indicated as ◆.

Note: Please refer to page 249 for the performance table.

H2 Type Right Angle Shaft | Shaft Diameter **40** | **Foot** Mounting

The values in parentheses ( ) are the indications for gearmotors with brake.

<Figure 1>

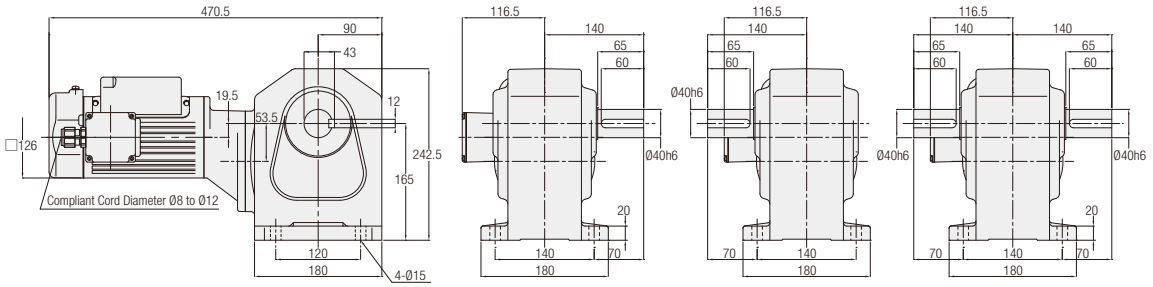

<Figure 2>

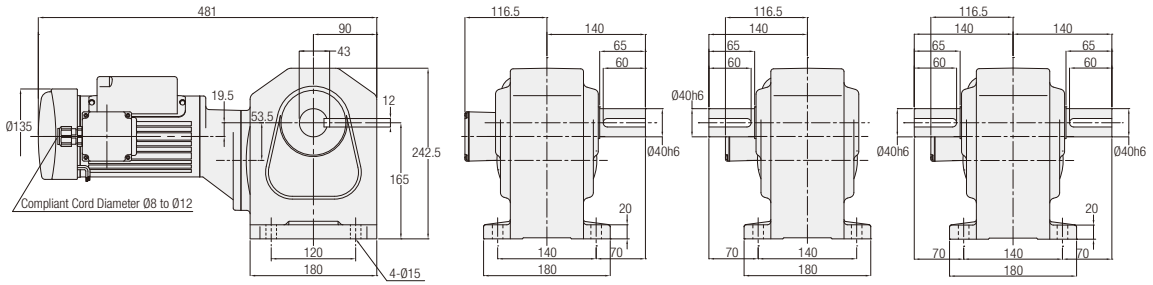

<Figure 3>

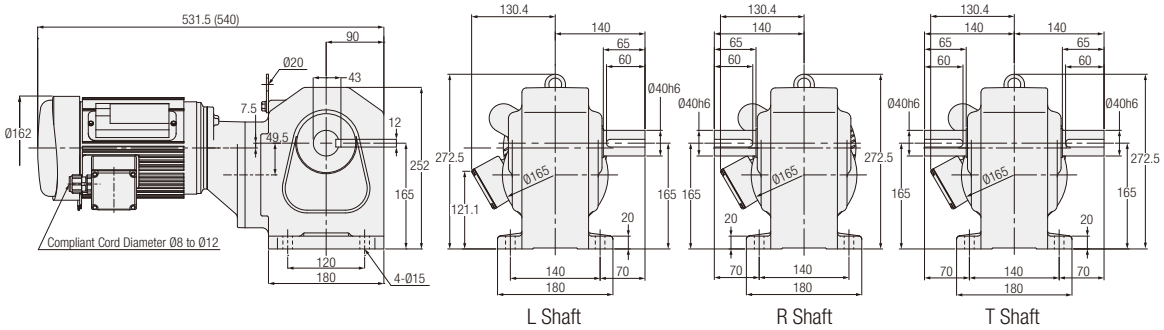

Number of Phases	Power	Part Number	Reduction Ratio	Figure Number	Brake	Approx. Weight (kg)
1-Phase	0.2 kW	H2L40#✱✱✱-MM02C◇JAN	600, 750, 900, 1200, 1500	1	No	24
		H2L40#✱✱✱-MM02C◇JAB2	600, 750, 900, 1200, 1500	2	Yes	24.5
	0.4 kW	H2L40#✱✱✱-MM04C◇JAN	300, 375, 450	3	No	30
		H2L40#✱✱✱-MM04C◇JAB2			Yes	32.5

Note: A shaft arrangement (L, R, T) will be indicated as # in the nomenclature. In addition, a reduction ratio will be indicated as ✱✱✱ and a supply voltage code will be indicated as ◇.

Note: Please refer to page 252 for the performance table.

H2 Type Right Angle Shaft | Shaft Diameter **50** | **Foot** Mounting

The values in parentheses ( ) are the indications for gearmotors with brake.

<Figure 1>

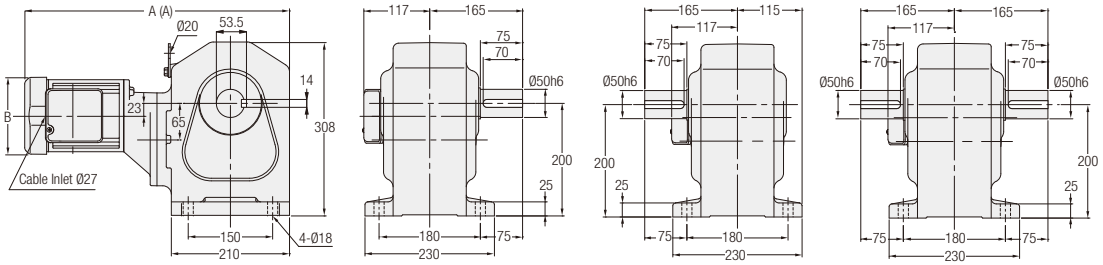

<Figure 2>

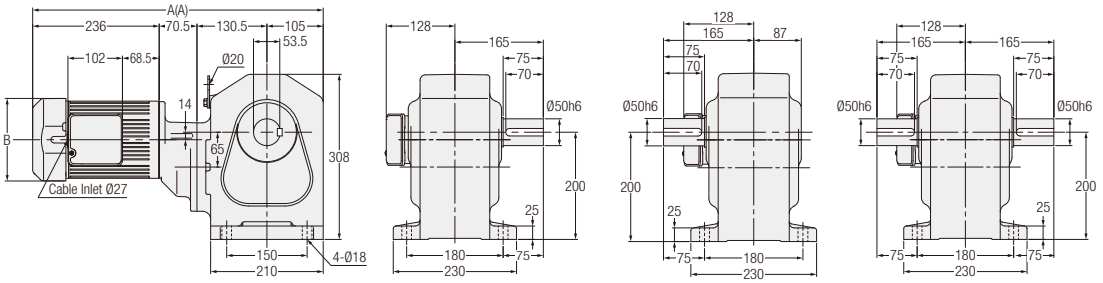

<Figure 3>

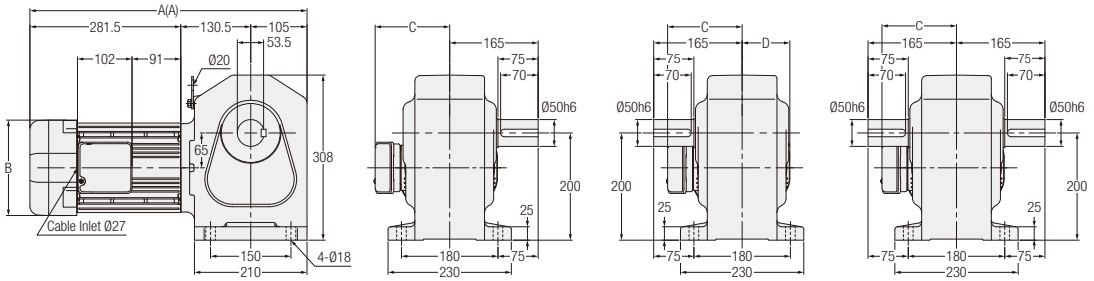

L Shaft R Shaft T Shaft

Number of Phases	Power	Part Number	Reduction Ratio	Figure Number	Brake	Approx. Weight (kg)	A	B	C	D
3-Phase	0.4 kW	H2L50####-MM04T◇◇TN	600, 750, 900, 1200, 1500	1	No	54.5	470.5	□137	-	-
		H2L50####-MM04T◇◇TB◆			Yes	56	490.5	□137	-	-
	0.75 kW	H2L50####-MR08T◇◇TN	300, 375, 450	2	No	62	523	□154	-	-
		H2L50####-MR08T◇◇TB◆			Yes	64.5	542	□154	-	-
	1.5 kW	H2L50####-MR15T◇◇TN	80, 100, 120, 160, 200, 240	3	No	65.5	488	□178	139	89
		H2L50####-MR15T◇◇TB◆			Yes	69	517	□178	139	89
	2.2 kW	H2L50####-MR22T◇◇TN	5, 10, 15, 20, 25, 30, 40, 50, 60, 80, 100, 120	3	No	72.5	537.5	□192	149	96
		H2L50####-MR22T◇◇TB◆			Yes	76	566.5	□192	149	96

Note: A shaft arrangement (L, R, T) will be indicated as # in the nomenclature. In addition, a reduction ratio will be indicated as ***, a supply voltage/certification code will be indicated as ◇◇, and a brake specification will be indicated as ◆.

Note: Please refer to page 250 for the performance table.

H2 Type Right Angle Shaft | Shaft Diameter **50** | **Foot** Mounting

The values in parentheses ( ) are the indications for gearmotors with brake.

<Figure 1>

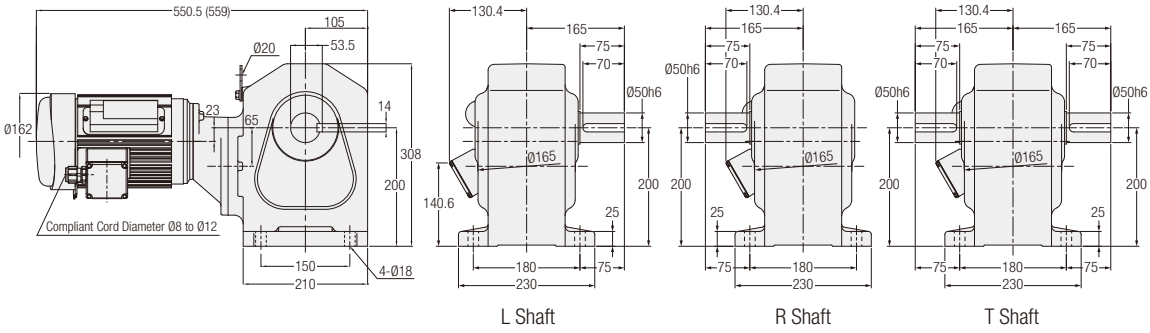

Number of Phases	Power	Part Number	Reduction Ratio	Figure Number	Brake	Approx. Weight (kg)
1-Phase	0.4 kW	H2L50#✱✱✱-MM04C◇JAN	600, 750, 900, 1200, 1500	1	No	60
		H2L50#✱✱✱-MM04C◇JAB2			Yes	62.5

Note: A shaft arrangement (L, R, T) will be indicated as # in the nomenclature. In addition, a reduction ratio will be indicated as ✱✱✱ and a supply voltage code will be indicated as ◇.

Note: Please refer to page 253 for the performance table.

H Type Right Angle Shaft | Shaft Diameter **15** | **Flange** Mounting

The values in parentheses ( ) are the indications for gearmotors with brake.

<Figure 1>

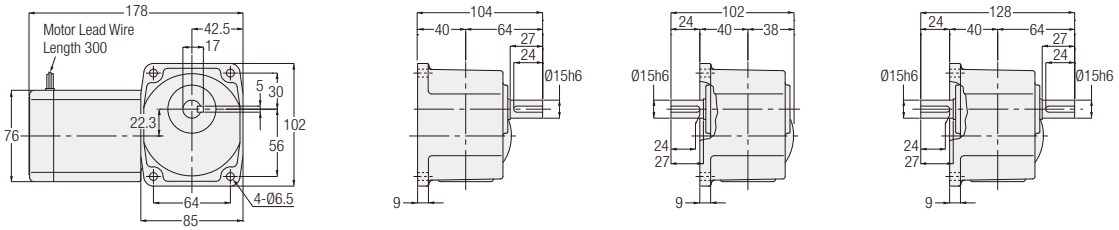

<Figure 2>

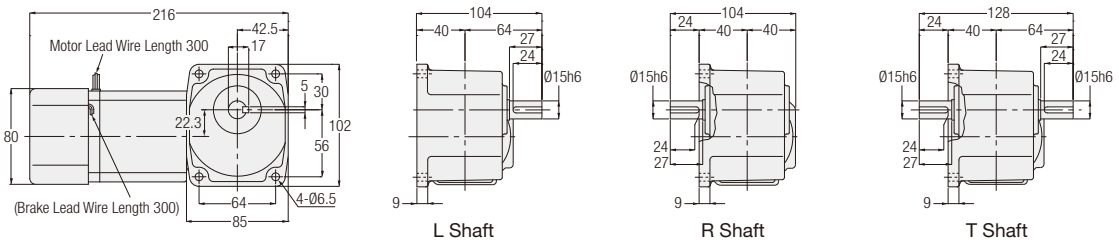

Number of Phases	Power	Part Number	Reduction Ratio	Figure Number	Brake	Approx. Weight (kg)
3-Phase	15 W	HFM-15#-***-T15	10, 15, 20, 25, 30, 40, 50, 60, 80, 100, 120, 160, 200, 240	1	No	3
		HFM-15#-***-T15W				
		HFMN-15#-***-T15	10, 15, 20, 25, 30, 40, 50, 60, 80, 100, 120, 160, 200, 240	2	Yes	3
		HFMN-15#-***-T15W				
	25 W	HFM-15#-***-T25	10, 15, 20, 25, 30, 40, 50, 60, 80, 100, 120, 160, 200, 240	1	No	3
		HFM-15#-***-T25W				
		HFMN-15#-***-T25	10, 15, 20, 25, 30, 40, 50, 60, 80, 100, 120, 160, 200, 240	2	Yes	3
		HFMN-15#-***-T25W				
	40 W	HFM-15#-***-T40	10, 15, 20, 25, 30, 40, 50, 60, 80, 100, 120	1	No	3
		HFM-15#-***-T40W		2		
		HFMN-15#-***-T40	10, 15, 20, 25, 30, 40, 50, 60, 80, 100, 120	2	Yes	3
		HFMN-15#-***-T40W				
	60 W	HFM-15#-***-T60	10, 15, 20, 25, 30, 40, 50, 60	2	No	3
		HFMN-15#-***-T60		2	Yes	
1-Phase	15 W	HFM-15#-***-S15	10, 15, 20, 25, 30, 40, 50, 60, 80, 100, 120, 160, 200, 240	1	No	3
		HFM-15#-***-S15W				
		HFMN-15#-***-S15	10, 15, 20, 25, 30, 40, 50, 60, 80, 100, 120, 160, 200, 240	2	Yes	3
		HFMN-15#-***-S15W				
	25 W	HFM-15#-***-S25	10, 15, 20, 25, 30, 40, 50, 60, 80, 100, 120, 160, 200, 240	1	No	3
		HFM-15#-***-S25W				
		HFMN-15#-***-S25	10, 15, 20, 25, 30, 40, 50, 60, 80, 100, 120, 160, 200, 240	2	Yes	3
		HFMN-15#-***-S25W				
	40 W	HFM-15#-***-S40	10, 15, 20, 25, 30, 40, 50, 60, 80, 100, 120	2	No	3
		HFM-15#-***-S40W				
		HFMN-15#-***-S40	10, 15, 20, 25, 30, 40, 50, 60, 80, 100, 120	2	Yes	3
		HFMN-15#-***-S40W				

Note: A shaft arrangement (L, R, T) will be indicated as # in the nomenclature. In addition, a reduction ratio will be indicated as ***.
Note: Please refer to page 246 for the performance table.

H Type Right Angle Shaft | Shaft Diameter **18** | **Flange** Mounting

The values in parentheses ( ) are the indications for gearmotors with brake.

<Figure 1>

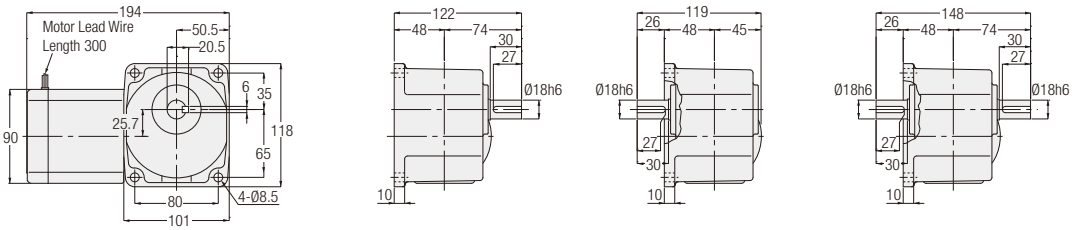

<Figure 2>

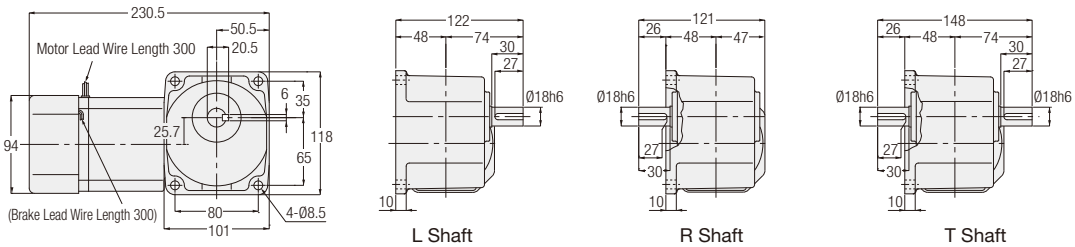

Number of Phases	Power	Part Number	Reduction Ratio	Figure Number	Brake	Approx. Weight (kg)
3-Phase	40 W	HFM-18#-***-T40	160, 200, 240	1	No	4
		HFM-18#-***-T40W				
		HFMN-18#-***-T40	160, 200, 240	2	Yes	4
		HFMN-18#-***-T40W				
	60 W	HFM-18#-***-T60	80, 100, 120, 160, 200, 240	1	No	4
		HFM-18#-***-T60W				
		HFMN-18#-***-T60	80, 100, 120, 160, 200, 240	2	Yes	4
		HFMN-18#-***-T60W				
	90 W	HFM-18#-***-T90	10, 15, 20, 25, 30, 40, 50, 60, 80, 100, 120, 160, 200, 240	1	No	4
		HFM-18#-***-T90W		2		
		HFMN-18#-***-T90	10, 15, 20, 25, 30, 40, 50, 60, 80, 100, 120, 160, 200, 240	2	Yes	4
		HFMN-18#-***-T90W				
1-Phase	40 W	HFM-18#-***-S40	160, 200, 240	1	No	4
		HFM-18#-***-S40W				
		HFMN-18#-***-S40	160, 200, 240	2	Yes	4
		HFMN-18#-***-S40W				
	60 W	HFM-18#-***-S60	10, 15, 20, 25, 30, 40, 50, 60, 80, 100, 120, 160, 200, 240	2	No	4
		HFM-18#-***-S60W				
		HFMN-18#-***-S60	80, 100, 120, 160, 200, 240	2	Yes	4
		HFMN-18#-***-S60W				
	90 W	HFM-18#-***-S90	10, 15, 20, 25, 30, 40, 50, 60, 80, 100, 120, 160, 200, 240	2	No	4
		HFM-18#-***-S90W				
		HFMN-18#-***-S90	10, 15, 20, 25, 30, 40, 50, 60, 80, 100, 120, 160, 200, 240	2	Yes	4
		HFMN-18#-***-S90W				

Note: A shaft arrangement (L, R, T) will be indicated as # in the nomenclature. In addition, a reduction ratio will be indicated as ***.
Note: Please refer to page 247 for the performance table.

H Type Right Angle Shaft | Shaft Diameter 22 | **Flange** Mounting

The values in parentheses ( ) are the indications for gearmotors with brake.

<Figure 1>

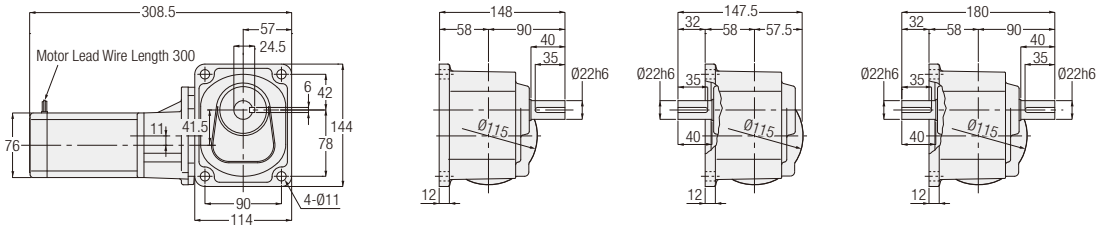

<Figure 2>

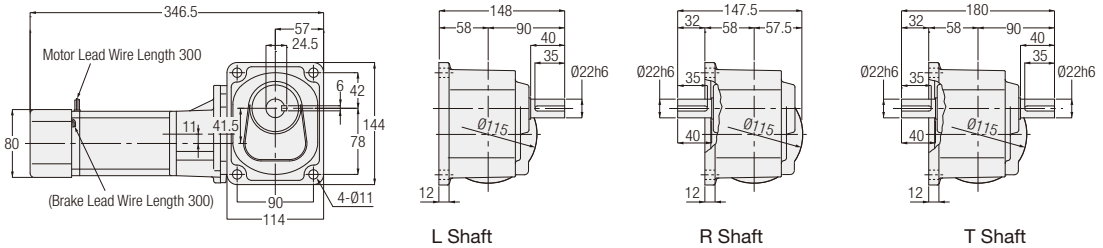

L Shaft R Shaft T Shaft

Number of Phases	Power	Part Number	Reduction Ratio	Figure Number	Brake	Approx. Weight (kg)
3-Phase	15 W	HFM-22#-***-T15	300, 375, 450, 600, 750, 900, 1200, 1500, 1800	1	No	6
		HFM-22#-***-T15W				
		HFMN-22#-***-T15	300, 375, 450, 600, 750, 900, 1200, 1500, 1800	2	Yes	6
		HFMN-22#-***-T15W				
	25 W	HFM-22#-***-T25	300, 375, 450, 600, 750, 900	1	No	6
		HFM-22#-***-T25W				
		HFMN-22#-***-T25	300, 375, 450, 600, 750, 900	2	Yes	6
		HFMN-22#-***-T25W				
	40 W	HFM-22#-***-T40	300, 375, 450	1	No	6
		HFM-22#-***-T40W		2		
		HFMN-22#-***-T40	300, 375, 450	2	Yes	6
		HFMN-22#-***-T40W				
	60 W	HFM-22#-***-T60	300, 375, 450	2	No	6
		HFM-22#-***-T60W				
		HFMN-22#-***-T60	300, 375, 450	2	Yes	6
		HFMN-22#-***-T60W				
1-Phase	15 W	HFM-22#-***-S15	300, 375, 450, 600, 750, 900, 1200, 1500, 1800	1	No	6
		HFM-22#-***-S15W				
		HFMN-22#-***-S15	300, 375, 450, 600, 750, 900, 1200, 1500, 1800	2	Yes	6
		HFMN-22#-***-S15W				
	25 W	HFM-22#-***-S25	300, 375, 450, 600, 750, 900	1	No	6
		HFM-22#-***-S25W				
		HFMN-22#-***-S25	300, 375, 450, 600, 750, 900	2	Yes	6
		HFMN-22#-***-S25W				
	40 W	HFM-22#-***-S40	300, 375, 450	2	No	6
		HFM-22#-***-S40W				
		HFMN-22#-***-S40	300, 375, 450	2	Yes	6
		HFMN-22#-***-S40W				
	60 W	HFM-22#-***-S60	300, 375, 450	2	No	6
		HFM-22#-***-S60W				
		HFMN-22#-***-S60	300, 375, 450	2	Yes	6
		HFMN-22#-***-S60W				

Note: A shaft arrangement (L, R, T) will be indicated as # in the nomenclature. In addition, a reduction ratio will be indicated as ***.
Note: Please refer to page 246 for the performance table.

H2 Type Right Angle Shaft | Shaft Diameter **22** | **Flange** Mounting

The values in parentheses ( ) are the indications for gearmotors with brake.

<Figure 1>

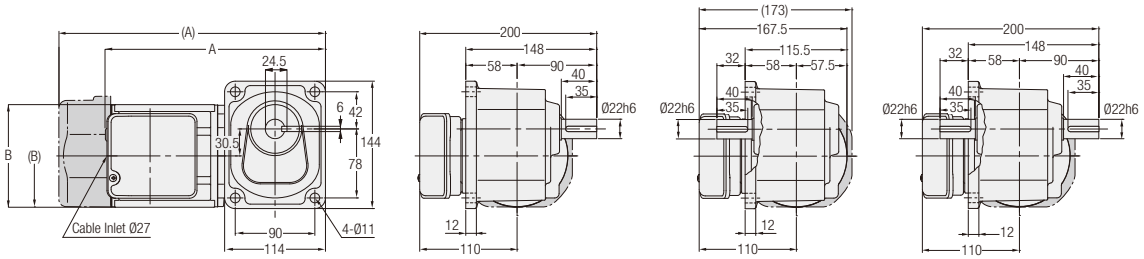

L Shaft R Shaft T Shaft

Number of Phases	Power	Part Number	Reduction Ratio	Figure Number	Brake	Approx. Weight (kg)	A	B
3-Phase	0.1 kW	H2F22#✱✱✱-MM01T◇◇TN	5, 10, 15, 20, 25, 30, 40, 50, 60, 80, 100, 120, 160, 200, 240	1	No	6.5	236	Ø115
		H2F22#✱✱✱-MM01T◇◇TB◆			Yes	8	276	□126
	0.2 kW	H2F22#✱✱✱-MM02T◇◇TN	5, 10, 15, 20, 25, 30, 40, 50, 60	1	No	7.5	251	Ø115
		H2F22#✱✱✱-MM02T◇◇TB◆			Yes	9	301.5	□126

Note: A shaft arrangement (L, R, T) will be indicated as # in the nomenclature. In addition, a reduction ratio will be indicated as ✱✱✱, a supply voltage/certification code will be indicated as ◇◇, and a brake specification will be indicated as ◆.

Note: Please refer to page 249 for the performance table.

H2 Type Right Angle Shaft | Shaft Diameter 22 | **Flange** Mounting

The values in parentheses ( ) are the indications for gearmotors with brake.

<Figure 1>

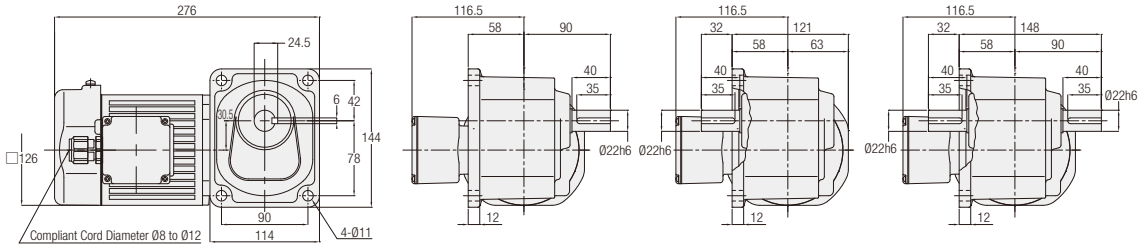

<Figure 2>

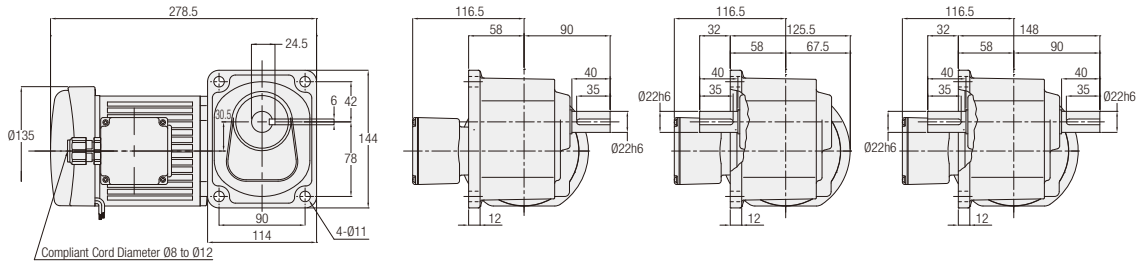

<Figure 3>

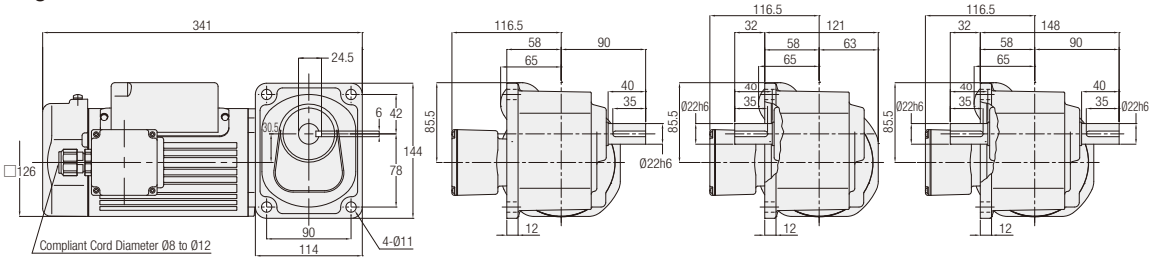

<Figure 4>

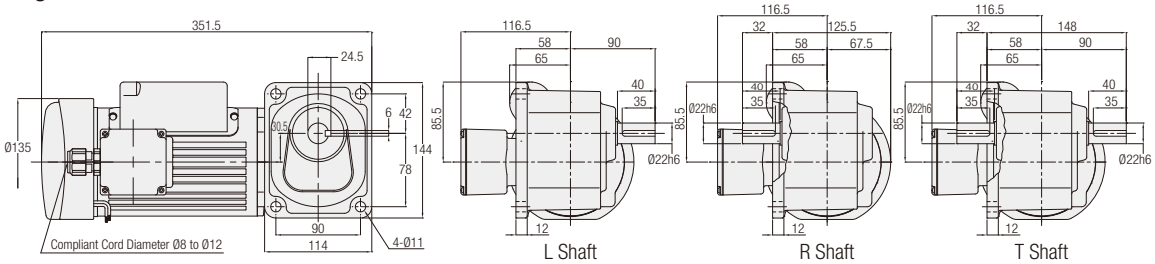

Number of Phases	Power	Part Number	Reduction Ratio	Figure Number	Brake	Approx. Weight (kg)
1-Phase	0.1 kW	H2F22#✱✱✱-MM01S◇JAN	5, 10, 15, 20, 25, 30, 40, 50, 60, 80, 100, 120, 160, 200, 240	1	No	7
		H2F22#✱✱✱-MM01S◇JAB2	5, 10, 15, 20, 25, 30, 40, 50, 60, 80, 100, 120, 160, 200, 240	2	Yes	9.5
	0.2 kW	H2F22#✱✱✱-MM02C◇JAN	5, 10, 15, 20, 25, 30, 40, 50, 60	3	No	8
		H2F22#✱✱✱-MM02C◇JAB2	5, 10, 15, 20, 25, 30, 40, 50, 60	4	Yes	11

Note: A shaft arrangement (L, R, T) will be indicated as # in the nomenclature. In addition, a reduction ratio will be indicated as ✱✱✱ and a supply voltage code will be indicated as ◇.

Note: Please refer to page 252 for the performance table.

MEMO

2. IP65 Gearmotors
IP65 Gearmotors with Brake

2-1. Motor Characteristics Table

H Type 3-Phase Standard Voltage

Series	Power (W)	Voltage (V)	Frequency (Hz)	Frame Size	Rated Current (A)	Rated Speed (r/min)	Startup Current (A)
MINI	15	200/200/220	50/60/60	15	0.14/0.13/0.13	1350/1550/1600	0.30/0.28/0.31
	25	200/200/220	50/60/60	15	0.21/0.19/0.19	1350/1550/1600	0.44/0.42/0.46
	40	200/200/220	50/60/60	15	0.29/0.27/0.27	1350/1550/1600	0.67/0.62/0.68
				18	0.27/0.26/0.26	1350/1550/1550	0.73/0.69/0.76
	60	200/200/220	50/60/60	18	0.40/0.36/0.36	1350/1550/1600	1.04/0.97/1.07
	90	200/200/220	50/60/60	18	0.51/0.48/0.48	1350/1550/1550	1.42/1.36/1.49

The rated current in the motor characteristics table and performance table is the current data for the motor operating without a gearbox.
With regard to gearmotors with a brake, it is necessary to consider the current value flowing through the brake as needed.
For more details, please contact your nearest Sales Office or the CS Center.

H Type 1-Phase Standard Voltage

Series	Power (W)	Voltage (V)	Frequency (Hz)	Frame Size	Rated Current (A)	Rated Speed (r/min)	Startup Current (A)	Capacitor (μF)
MINI	15	100/100	50/60	15	0.39/0.35	1350/1650	0.72/0.67	5
	25	100/100	50/60	15	0.48/0.48	1350/1600	0.86/0.80	7
	40	100/100	50/60	18	0.61/0.66	1350/1650	1.43/1.36	10

The rated current in the motor characteristics table and performance table is the current data for the motor operating without a gearbox.
With regard to gearmotors with a brake, it is necessary to consider the current value flowing through the brake as needed.
For more details, please contact your nearest Sales Office or the CS Center.

H2 Type 3-Phase Standard Voltage/High Voltage (400 V Class)/Special Voltage

Series	Power	Power Supply/ Certification Codes	Voltage (V)	Frequency (Hz)	Rated Current (A)	Startup Current (A)	Rated Speed (r/min)
MID	0.1 kW	NN	200/200/220	50/60/60	0.61/0.54/0.54	2.39/2.27/2.52	1410/1690/1710
		WN	380/400/400/440	50/50/60/60	0.31/0.31/0.28/0.28	1.12/1.18/1.12/1.22	1400/1410/1690/1720
		KN	220/380	60/60	0.52/0.30	1.90/1.10	1680/1680
		CN	220/230/380	50/50/50	0.55/0.54/0.31	1.94/2.03/1.12	1400/1410/1400
		DN	220/220/380/380	50/60/50/60	0.55/0.52/0.31/0.30	1.94/1.90/1.12/1.10	1400/1680/1400/1680
		EN	415/440/480	50/50/60	0.30/0.29/0.26	1.06/1.12/1.17	1390/1420/1720
		AN	208/230/460/400	60/60/60/50	0.54/0.57/0.29/0.31	2.35/2.62/1.26/1.21	1690/1730/1730/1410
		MA	575	60	0.20	0.87	1700
	0.2 kW IE2	NN	200/200/220	50/60/60	1.1/1.0/1.0	4.70/4.35/4.85	1400/1680/1700
		WN	380/400/400/440	50/50/60/60	0.56/0.56/0.50/0.50	2.29/2.38/2.29/2.48	1390/1400/1680/1710
		KN	220/380	60/60	0.93/0.52	3.70/2.20	1680/1680
		CN	220/230/380	50/50/50	0.99/0.98/0.56	3.97/4.15/2.29	1400/1410/1390
		DN	220/220/380/380	50/60/50/60	0.99/0.93/0.56/0.52	3.97/3.70/2.29/2.20	1400/1680/1390/1680
		EN	415/440/480	50/50/60	0.50/0.50/0.45	1.75/1.86/2.00	1370/1400/1700
		AN	208/230/460/400	60/60/60/50	1.0/1.0/0.50/0.56	4.78/5.16/2.56/2.44	1680/1720/1720/1400
		MA	575	60	0.40	1.78	1710
	0.4 kW IE2	NN	200/200/220	50/60/60	2.1/1.8/1.8	9.60/8.54/9.21	1400/1680/1700
		WN	380/400/400/440	50/50/60/60	1.0/1.0/0.9/0.9	4.43/4.64/4.24/4.85	1390/1400/1680/1710
		KN	220/380	60/60	1.7/1.0	7.10/4.09	1670/1670
		CN	220/230/380	50/50/50	1.8/1.8/1.0	7.63/8.04/4.43	1390/1400/1390
		DN	220/220/380/380	50/60/50/60	1.8/1.7/1.0/1.0	7.63/7.10/4.43/4.09	1390/1670/1390/1670
		EN	415/440/480	50/50/60	0.96/0.95/0.82	4.45/4.56/4.52	1390/1410/1680
		AN	208/230/460/400	60/60/60/50	1.8/1.8/0.9/1.0	9.21/9.82/5.06/4.62	1680/1720/1720/1400
		MA	575	60	0.68	3.94	1700
	0.75 kW IE3	NN	200/200/220	50/60/60	3.5/3.2/3.1	21.8/19.0/21.1	1450/1740/1750
		WN	380/400/400/440	50/50/60/60	1.73/1.72/1.58/1.54	10.2/10.8/9.8/10.7	1440/1450/1740/1750
		KN	220/380	60/60	2.9/1.7	16.9/9.8	1740/1740
		CN	220/230/380	50/50/50	3.0/3.0/1.7	17.8/18.7/10.3	1450/1450/1440
		DN	220/220/380/380	50/60/50/60	3.1/2.9/1.8/1.7	19.3/16.9/11.2/9.8	1450/1740/1450/1740
		EN	415/440/480	50/50/60	1.54/1.52/1.36	8.6/9.3/9.0	1440/1450/1750
		UN	230/460/400	60/60/50	3.1/1.5/1.7	22.3/11.2/10.8	1760/1760/1450
		MA	575	60	1.16	7.2	1750
	1.5 kW IE3	NN	200/200/220	50/60/60	6.7/6.1/5.9	45.6/40.3/45.1	1450/1740/1760
		WN	380/400/400/440	50/50/60/60	3.4/3.4/3.1/3.0	21.9/23.2/20.4/22.8	1450/1450/1750/1760
		KN	220/380	60/60	5.9/3.4	45.1/25.8	1760/1760
		CN	220/230/380	50/50/50	5.9/5.9/3.4	38.5/40.4/22.1	1450/1450/1450
		EN	415/440/480	50/50/60	3.1/3.1/2.8	20.8/22.2/21.2	1450/1460/1760
		UN	230/460/400	60/60/50	5.9/2.9/3.3	44.9/22.6/23.2	1760/1760/1450
		MA	575	60	2.2	17.0	1760
	2.2 kW IE3	NN	200/200/220	50/60/60	9.3/8.6/8.2	70.3/56.9/63.7	1470/1760/1770
		WN	380/400/400/440	50/50/60/60	4.5/4.4/4.2/3.9	30.0/32.0/25.0/28.0	1440/1450/1740/1750
		KN	220/380	60/60	8.3/4.8	65.0/38.0	1770/1770
		CN	220/230/380	50/50/50	7.9/7.7/4.5	52.0/54.3/30.0	1460/1470/1440
		EN	415/440/480	50/50/60	4.3/4.3/3.8	33.1/35.5/29.8	1460/1470/1770
		UN	230/460/400	60/60/50	7.9/4.0/4.5	65.2/34.8/36.3	1770/1770/1470
		MA	575	60	3.3	24.4	1760

The rated current in the motor characteristics table and performance table is the current data for the motor operating without a gearbox.
With regard to gearmotors with a brake, it is necessary to consider the current value flowing through the brake as needed.
For more details, please contact your nearest Sales Office or the CS Center.

2-2. Performance Table

H Type IP65 Gearmotors/IP65 Gearmotors with Brake

[Notes]
- The values in parentheses ( ) in the drawings are the indications for gearmotors with brake.
- The output shaft speed is the value relative to the synchronous speed of the motor and the reduction ratio.
- Three output shaft types, L, R, and T, are available for the H Type.
- Allowable output shaft O.H.L. is the at the middle of the output shaft.
- The "*" mark indicates a limited torque type. Please make sure to check the allowable output shaft torque in the performance table.
- The reduction ratio in ▭ in the performance table indicates that the output shaft rotates in the directions shown below when the connection is made as shown on page 546 (CW). (Refer to the figure on the right)
  3-phase: L shaft in the CW direction and R and T shafts in the CCW direction when viewed from the output shaft side
  1-phase: L shaft in the CCW direction and R and T shafts in the CW direction when viewed from the output shaft side

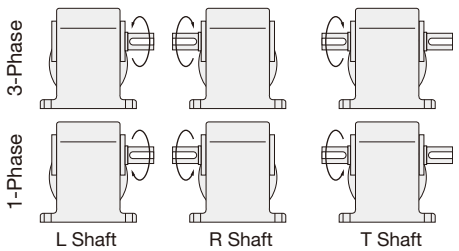

Series	Motor Power	Frame Size	Reduction Ratio	Actual Reduction Ratio	Output Shaft Speed r/min 50 Hz	Output Shaft Speed r/min 60 Hz	Allowable Output Shaft Torque N·m	Allowable Output Shaft O.H.L. N	Drawings Foot Mount	Drawings Flange Mount
MINI	15 W	15	1/10	1/10	150	180	0.69	343	P.283	P.290
			1/15	1/15	100	120	0.98	441		
			1/20	1/20	75	90	1.27	539		
			1/25	1/25	60	72	1.67	588		
			1/30	1/30	50	60	1.96	686		
			1/40	1/40	37.5	45	2.65	784		
			1/50	1/50	30	36	3.33	882		
			1/60	1/60	25	30	3.92	882		
			1/80	1/80	18.8	22.5	5.00	980		
			1/100	1/100	15	18	6.27	980		
			1/120	1/120	12.5	15	7.45	1080		
			1/160	1/160	9.4	11.2	9.80	1080		
			1/200	1/200	7.5	9	12.7	1080		
			1/240	1/240	6.3	7.5	14.7	1080		
	25 W	15	1/10	4/41	150	180	1.08	343	P.283	P.290
			1/15	8/123	100	120	1.67	441		
			1/20	2/41	75	90	2.25	539		
			1/25	8/205	60	72	2.74	588		
			1/30	4/123	50	60	3.33	686		
			1/40	1/41	37.5	45	4.41	784		
			1/50	4/205	30	36	5.49	882		
			1/60	20/1189	25	30	6.66	882		
			1/80	1/82	18.8	22.5	8.43	980		
			1/100	2/205	15	18	10.8	980		
			1/120	1/123	12.5	15	12.7	1080		
			1/160	1/164	9.4	11.2	16.7	1080		
			1/200	1/205	7.5	9	20.6	1080		
			1/240	5/1189	6.3	7.5	25.5	1080		
	40 W	15	1/10	4/41	150	180	1.76	343	P.283	P.290
			1/15	8/123	100	120	2.65	441		
			1/20	2/41	75	90	3.53	539		
			1/25	8/205	60	72	4.41	588		
			1/30	4/123	50	60	5.29	686		
			1/40	1/41	37.5	45	7.06	784		
			1/50	4/205	30	36	8.82	882		
			1/60	20/1189	25	30	10.8	882		
			1/80	1/82	18.8	22.5	13.7	980		
			1/100	2/205	15	18	16.7	980		
			1/120	1/123	12.5	15	20.6	1080		
		18	1/160	1/164	9.4	11.2	26.5	1370	P.284	P.291
			1/200	1/205	7.5	9	33.3	1370		
			1/240	1/246	6.3	7.5	40.2	1370		

Series	Motor Power	Frame Size	Reduction Ratio	Actual Reduction Ratio	Output Shaft Speed r/min 50 Hz	Output Shaft Speed r/min 60 Hz	Allowable Output Shaft Torque N·m	Allowable Output Shaft O.H.L. N	Drawings Foot Mount	Drawings Flange Mount
MINI	60 W	18	1/10	4/41	150	180	2.74	343	P.284	P.291
			1/15	8/123	100	120	4.12	441		
			1/20	2/41	75	90	5.49	539		
			1/25	8/205	60	72	6.96	588		
			1/30	4/123	50	60	8.33	686		
			1/40	1/41	37.5	45	10.8	784		
			1/50	4/205	30	36	13.7	882		
			1/60	2/123	25	30	16.7	882		
			1/80	1/82	18.8	22.5	20.6	1270		
			1/100	2/205	15	18	26.5	1270		
			1/120	1/123	12.5	15	31.4	1370		
			1/160	1/164	9.4	11.2	42.1	1370		
			1/200	1/205	7.5	9	52.9	1370		
			* /240	1/246	6.3	7.5	53.9	1370		
	90 W	18	1/10	4/41	150	180	4.12	441	P.284	P.291
			1/15	8/123	100	120	6.17	588		
			1/20	2/41	75	90	8.33	735		
			1/25	8/205	60	72	10.8	882		
			1/30	4/123	50	60	12.7	980		
			1/40	1/41	37.5	45	16.7	1080		
			1/50	4/205	30	36	20.6	1180		
			1/60	2/123	25	30	24.5	1180		
			1/80	1/82	18.8	22.5	31.4	1270		
			1/100	2/205	15	18	39.2	1270		
			1/120	1/123	12.5	15	47.0	1370		
			* /160	1/164	9.4	11.2	53.9	1370		
			* /200	1/205	7.5	9	53.9	1370		
			* /240	1/246	6.3	7.5	53.9	1370		

H2 Type IP65 Gearmotors/IP65 Gearmotors with Brake

[Notes]
- The values in parentheses ( ) in the drawings are the indications for gearmotors with brake.
- The values in brackets [ ] in the drawings are the indications for carbon steel output shafts.
- The output shaft speed is the value relative to the synchronous speed of the motor and the reduction ratio.
- ▭ in the performance table indicates that the H and L shafts rotate clockwise and the M, B, R, and T shafts rotate counterclockwise when viewed from the output shaft side when the connection is made as shown on page 547 (CW). (Refer to the figure on the right)
- Allowable output shaft O.H.L. is the value at the middle of the output shaft.
- The "*" mark indicates a limited torque type. Please make sure to check the allowable output shaft torque in the performance table.

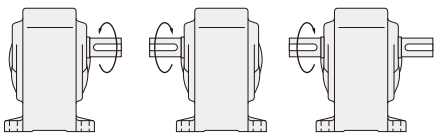

H Shaft L Shaft | M Shaft R Shaft | B Shaft T Shaft

Series	Motor Power	Frame Size	Reduction Ratio	Actual Reduction Ratio	Output Shaft Speed r/min		Allowable Output Shaft Torque N·m		Allowable Output Shaft O.H.L.	Drawings	
					50 Hz	60 Hz	50 Hz	60 Hz	N	Foot Mount	Flange Mount
MID	3-Phase 0.1 kW	22	1/5	1/5	300	360	2.8	2.4	588	P.285	P.292
			1/10	1/10	150	180	5.7	4.8	931		
			1/15	1/15	100	120	8.6	7.2	1030		
			1/20	1/20	75	90	12	9.5	1180		
			1/25	1/25	60	72	15	12	1270		
			1/30	1/30	50	60	18	15	1370		
			1/40	1/40	37.5	45	23	19	1570		
			1/50	1/50	30	36	28	24	1720		
			1/60	1/59	25	30	34	28	1760		
			1/80	1/80	18.8	22.5	44	37	1760		
			1/100	1/100	15	18	55	46	1760		
			1/120	1/120	12.5	15	67	55	1760		
			1/160	1/160	9.4	11.2	88	74	1760		
			1/200	1/200	7.5	9	111	92	1760		
			* 1/240	1/236	6.3	7.5	118	111	1760		
		28	1/300	7/2120	5	6	145	121	2840	P.286	-
			1/375	7/2650	4	4.8	181	151	2840		
			1/450	7/3127	3.3	4	218	181	2840		
		32	1/600	7/4240	2.5	3	286	238	4120	P.287	-
			1/750	7/5300	2	2.4	358	298	4120		
			1/900	7/6360	1.7	2	429	358	4120		
			* 1/1200	7/8480	1.3	1.5	431	431	4120		
			* 1/1500	7/10600	1	1.2	431	431	4120		
	3-Phase 0.2 kW	22	1/5	1/5	300	360	5.7	4.8	588	P.285	P.292
			1/10	1/10	150	180	12	9.5	931		
			1/15	1/15	100	120	18	15	1030		
			1/20	1/20	75	90	23	19	1180		
			1/25	1/25	60	72	28	24	1270		
			1/30	1/30	50	60	34	28	1370		
			1/40	1/40	37.5	45	46	38	1570		
			1/50	1/50	30	36	57	48	1720		
			1/60	1/59	25	30	69	57	1810		
		28	1/80	1/80	18.8	22.5	88	74	2450	P.286	-
			1/100	1/100	15	18	111	92	2650		
			1/120	1/120	12.5	15	133	111	2740		
			1/160	1/160	9.4	11.2	177	148	2840		
			1/200	1/200	7.5	9	221	184	2840		
			1/240	1/236	6.3	7.5	245	221	2840		
		32	1/300	7/2120	5	6	294	245	3820	P.287	-
			1/375	7/2650	4	4.8	368	306	4120		
			1/450	7/3127	3.3	4	431	368	4120		
		40	1/600	7/4240	2.5	3	588	490	6760	P.288	-
			1/750	7/5300	2	2.4	735	613	6760		
			* 1/900	7/6360	1.7	2	764	735	6760		
			* 1/1200	7/8480	1.3	1.5	764	764	6760		
			* 1/1500	7/10600	1	1.2	764	764	6760		

Series	Motor Power	Frame Size	Reduction Ratio	Actual Reduction Ratio	Output Shaft Speed r/min		Allowable Output Shaft Torque N·m		Allowable Output Shaft O.H.L.	Drawings
					50 Hz	60 Hz	50 Hz	60 Hz	N	Foot Mount
MID	3-Phase 0.4 kW	28	1/5	1/5	300	360	12	9.5	931	P.286
			1/10	1/10	150	180	23	19	1470	
			1/15	1/15	100	120	34	28	1670	
			1/20	1/20	75	90	46	38	1860	
			1/25	1/25	60	72	57	48	2010	
			1/30	1/30	50	60	69	57	2210	
			1/40	1/40	37.5	45	92	76	2450	
			1/50	1/50	30	36	115	95	2650	
			1/60	1/59	25	30	137	115	2740	
		32	1/80	1/80	18.8	22.5	177	148	3430	P.287
			1/100	1/100	15	18	221	184	3820	
			1/120	1/120	12.5	15	266	221	4120	
			1/160	1/160	9.4	11.2	355	295	4120	
			1/200	1/200	7.5	9	431	369	4120	
			* 1/240	1/236	6.3	7.5	431	431	4120	
		40	1/300	7/2080	5	6	572	477	6760	P.288
			1/375	7/2600	4	4.8	715	597	6760	
			* 1/450	7/3120	3.3	4	764	715	6760	
		50	1/600	21/12220	2.5	3	1150	955	9510	P.289
			* 1/750	1/728	2	2.4	1230	1190	9510	
			* 1/900	7/6240	1.7	2	1230	1230	9510	
			* 1/1200	21/24440	1.3	1.5	1230	1230	9510	
			* 1/1500	1/1456	1	1.2	1230	1230	9510	
	3-Phase 0.75 kW	32	1/5	1/5	300	360	22	18	1520	P.287
			1/10	1/10	150	180	43	36	2010	
			1/15	1/15	100	120	65	54	2210	
			1/20	1/20	75	90	86	72	2450	
			1/25	1/25	60	72	108	89	2740	
			1/30	1/30	50	60	128	107	2940	
			1/40	1/40	37.5	45	172	143	3430	
			1/50	1/50	30	36	215	179	3820	
			1/60	1/59	25	30	258	215	4120	
		40	1/80	1/80	18.8	22.5	332	277	5780	P.288
			1/100	1/100	15	18	416	346	6080	
			1/120	1/120	12.5	15	498	415	6270	
			1/160	1/160	9.4	11.2	664	554	6470	
			* 1/200	1/200	7.5	9	764	692	6660	
			* 1/240	1/240	6.3	7.5	764	764	6660	
		50	1/300	7/2120	5	6	1070	895	7740	P.289
			* 1/375	7/2650	4	4.8	1230	1120	8040	
			* 1/450	7/3180	3.3	4	1230	1230	8530	

Series	Motor Power	Frame Size	Reduction Ratio	Actual Reduction Ratio	Output Shaft Speed r/min		Allowable Output Shaft Torque N·m		Allowable Output Shaft O.H.L.	Drawings
					50 Hz	60 Hz	50 Hz	60 Hz	N	Foot Mount
MID	3-Phase 1.5 kW	40	1/5	1/5	300	360	43	36	2650	P.288
			1/10	1/10	150	180	86	72	3530	
			1/15	1/15	100	120	128	107	4410	
			1/20	1/20	75	90	172	143	4700	
			1/25	1/25	60	72	215	179	5100	
			1/30	1/30	50	60	258	215	5290	
			1/40	1/40	37.5	45	344	277	5590	
			1/50	1/50	30	36	429	346	5880	
			1/60	1/60	25	30	515	415	6080	
		50	1/80	3/235	18.8	22.5	664	554	8530	P.289
			1/100	1/98	15	18	830	692	8820	
			1/120	1/120	12.5	15	1000	830	9020	
			* 1/160	3/470	9.4	11.2	1230	1110	9310	
			* 1/200	1/196	7.5	9	1230	1230	9510	
			* 1/240	1/240	6.3	7.5	1230	1230	9510	
	3-Phase 2.2 kW	50	1/5	1/5	300	360	63	53	3920	P.289
			1/10	1/10	150	180	126	105	4410	
			1/15	1/15	100	120	189	157	4900	
			1/20	12/235	75	90	252	210	5490	
			1/25	2/49	60	72	315	263	6080	
			1/30	1/30	50	60	378	315	6570	
			1/40	1/40	37.5	45	487	406	7060	
			1/50	1/50	30	36	609	507	7550	
			1/60	1/60	25	30	731	609	8130	
			1/80	3/235	18.8	22.5	974	812	8430	
			1/100	1/98	15	18	1220	1010	8820	
			* 1/120	1/120	12.5	15	1230	1220	8820	

Note 1: Please be sure to read the notes on page 280.

2-3. Drawings

H Type Right Angle Shaft | Shaft Diameter **15** | **Foot** Mounting

The values in parentheses ( ) are the indications for gearmotors with brake.

<Figure 1>

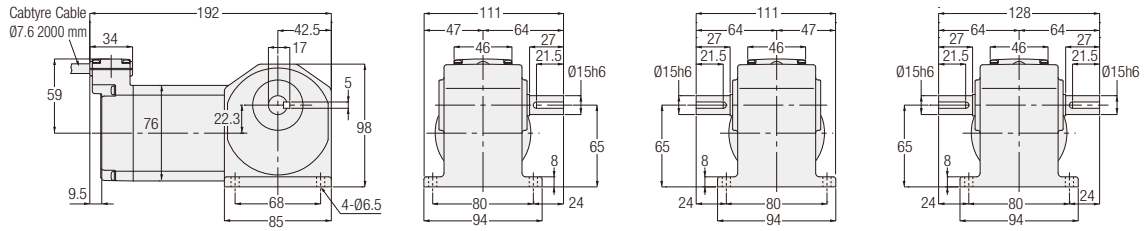

<Figure 2>

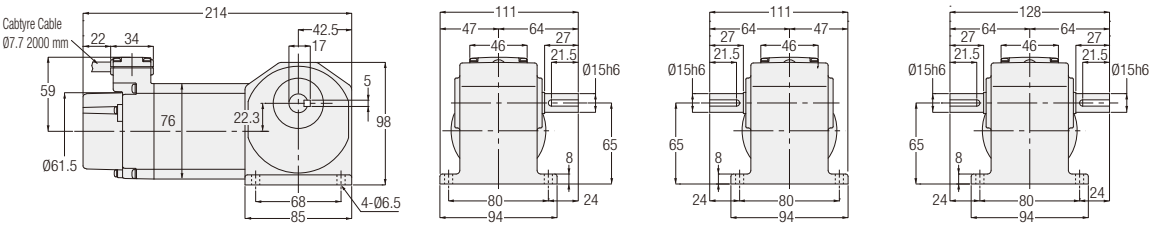

L Shaft R Shaft T Shaft

Number of Phases	Power	Part Number	Reduction Ratio	Figure Number	Brake	Approx. Weight (kg)
3-Phase	15 W	HLW-15#-***-T15	10, 15, 20, 25, 30, 40, 50, 60, 80, 100, 120, 160, 200, 240	1	No	3
		HLV-15#-***-T15		2	Yes	
	25 W	HLW-15#-***-T25	10, 15, 20, 25, 30, 40, 50, 60, 80, 100, 120, 160, 200, 240	1	No	3
		HLV-15#-***-T25		2	Yes	
	40 W	HLW-15#-***-T40	10, 15, 20, 25, 30, 40, 50, 60, 80, 100, 120	1	No	3
		HLV-15#-***-T40		2	Yes	
1-Phase	15 W	HLW-15#-***-S15	10, 15, 20, 25, 30, 40, 50, 60, 80, 100, 120, 160, 200, 240	1	No	3
		HLV-15#-***-S15		2	Yes	
	25 W	HLW-15#-***-S25	10, 15, 20, 25, 30, 40, 50, 60, 80, 100, 120, 160, 200, 240	1	No	3
		HLV-15#-***-S25		2	Yes	

Note: A shaft arrangement (L, R, T) will be indicated as # in the nomenclature. In addition, a reduction ratio will be indicated as ***.
Note: Please refer to page 278 for the performance table.

H Type Right Angle Shaft | Shaft Diameter **18** | **Foot** Mounting

The values in parentheses ( ) are the indications for gearmotors with brake.

<Figure 1>

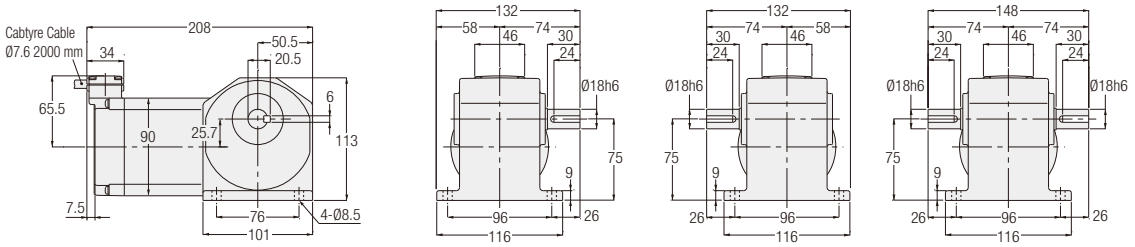

<Figure 2>

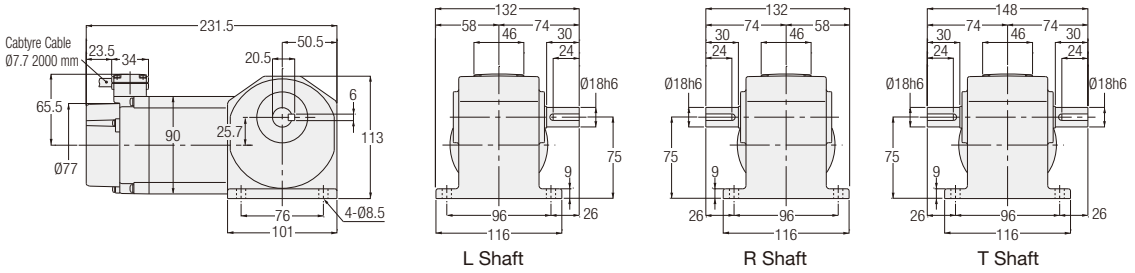

Number of Phases	Power	Part Number	Reduction Ratio	Figure Number	Brake	Approx. Weight (kg)
3-Phase	40 W	HLW-18#-***-T40	160, 200, 240	1	No	4
		HLV-18#-***-T40		2	Yes	
	60 W	HLW-18#-***-T60	10, 15, 20, 25, 30, 40, 50, 60, 80, 100, 120, 160, 200, 240	1	No	4
		HLV-18#-***-T60		2	Yes	
	90 W	HLW-18#-***-T90	10, 15, 20, 25, 30, 40, 50, 60, 80, 100, 120, 160, 200, 240	1	No	4
		HLV-18#-***-T90		2	Yes	
1-Phase	40 W	HLW-18#-***-S40	10, 15, 20, 25, 30, 40, 50, 60, 80, 100, 120, 160, 200, 240	1	No	4
		HLV-18#-***-S40		2	Yes	

Note: A shaft arrangement (L, R, T) will be indicated as # in the nomenclature. In addition, a reduction ratio will be indicated as ***.
Note: Please refer to page 278 for the performance table.

H2 Type Right Angle Shaft | Shaft Diameter 22 | **Foot** Mounting

The values in parentheses ( ) are the indications for gearmotors with brake.
The values in brackets [ ] are the indications for carbon steel output shafts.

<Figure 1>

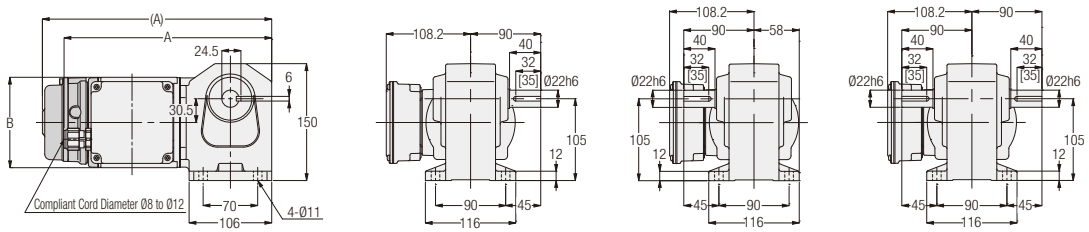

<Figure 2>

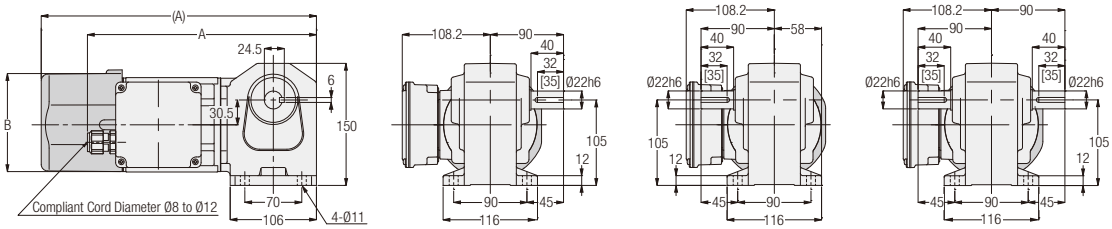

H Shaft
L Shaft

M Shaft
R Shaft

B Shaft
T Shaft

Number of Phases	Power	Part Number	Reduction Ratio	Figure Number	Brake	Approx. Weight (kg)	A	B
3-Phase	0.1 kW	H2L22####-WM01T◇◇EN	5, 10, 15, 20, 25, 30, 40, 50, 60, 80, 100, 120, 160, 200, 240	1	No	6.5	267	Ø115
		H2L22####-WM01T◇◇EV◆			Yes	8	294.5	Ø115
	0.2 kW	H2L22####-WM02T◇◇EN	5, 10, 15, 20, 25, 30, 40, 50, 60	2	No	7.5	282	Ø115
		H2L22####-WM02T◇◇EV◆			Yes	9	338.5	□126

Note: H, M, or B will be indicated as # in the nomenclature when the shaft material is stainless steel, L, R, or T will be indicated as # when it is carbon steel.
In addition, a reduction ratio will be indicated as ***, a supply voltage code will be indicated as ◇◇, and a brake specification will be indicated as ◆.
Note: Please refer to page 280 for the performance table.

H2 Type Right Angle Shaft | Shaft Diameter 28 | Foot Mounting

The values in parentheses ( ) are the indications for gearmotors with brake.
The values in brackets [ ] are the indications for carbon steel output shafts.

<Figure 1>

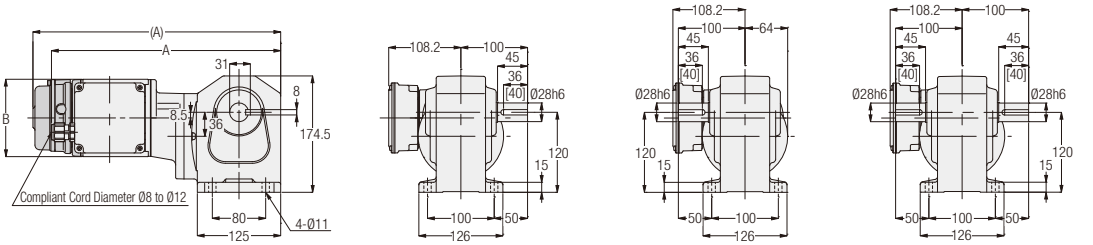

<Figure 2>

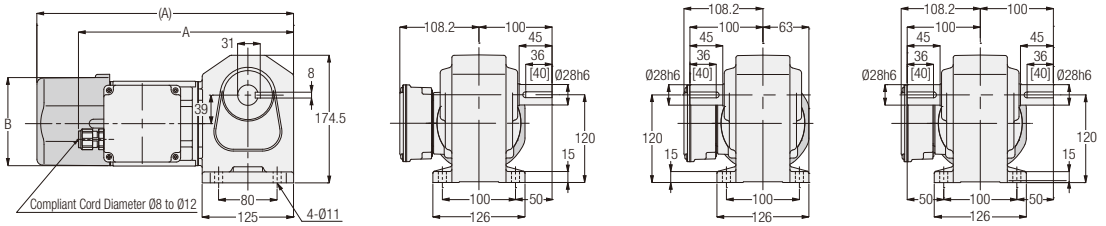

<Figure 3>

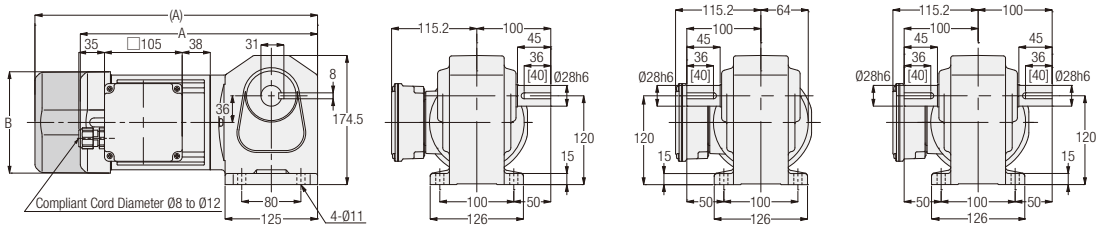

H Shaft
L Shaft

M Shaft
R Shaft

B Shaft
T Shaft

Number of Phases	Power	Part Number	Reduction Ratio	Figure Number	Brake	Approx. Weight (kg)	A	B
3-Phase	0.1 kW	H2L28#✱✱✱-WM01T◇◇EN	300, 375, 450	1	No	10	344	Ø115
		H2L28#✱✱✱-WM01T◇◇EV◆			Yes	11.5	371.5	Ø115
	0.2 kW	H2L28#✱✱✱-WM02T◇◇EN	80, 100, 120, 160, 200, 240	2	No	9.5	294.5	Ø115
		H2L28#✱✱✱-WM02T◇◇EV◆			Yes	11	351	□126
	0.4 kW	H2L28#✱✱✱-WM04T◇◇EN	5, 10, 15, 20, 25, 30, 40, 50, 60	3	No	11	321	□137
		H2L28#✱✱✱-WM04T◇◇EV◆			Yes	12.5	382	□137

Note: H, M, or B will be indicated as # in the nomenclature when the shaft material is stainless steel, L, R, or T will be indicated as # when it is carbon steel.
In addition, a reduction ratio will be indicated as ✱✱✱, a supply voltage code will be indicated as ◇◇, and a brake specification will be indicated as ◆.
Note: Please refer to page 280 for the performance table.

H2 Type Right Angle Shaft | Shaft Diameter **32** | **Foot** Mounting

The values in parentheses ( ) are the indications for gearmotors with brake.
The values in brackets [ ] are the indications for carbon steel output shafts.

<Figure 1>

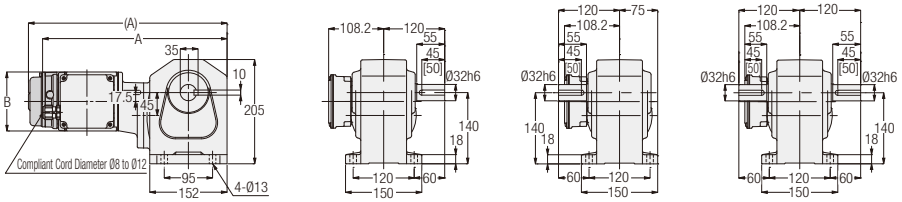

<Figure 2>

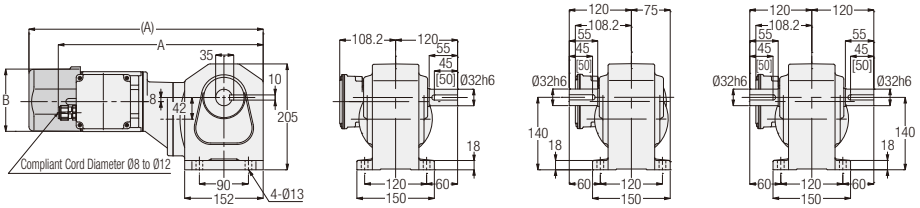

<Figure 3>

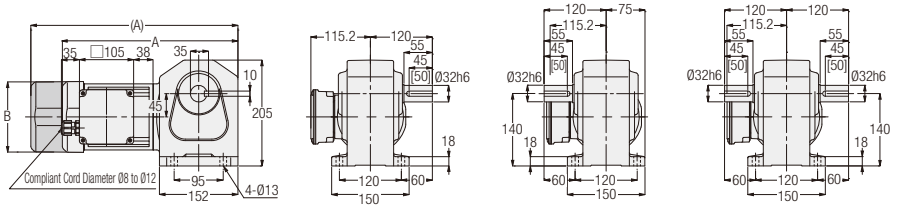

<Figure 4>

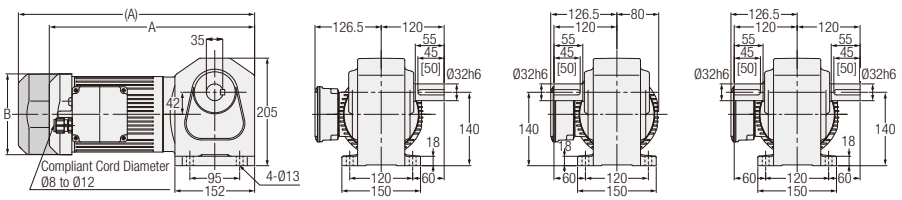

H Shaft
L Shaft

M Shaft
R Shaft

B Shaft
T Shaft

Number of Phases	Power	Part Number	Reduction Ratio	Figure Number	Brake	Approx. Weight (kg)	A	B
3-Phase	0.1 kW	H2L32####-WM01T◇◇EN	600, 750, 900,1200, 1500	1	No	13	363	Ø115
		H2L32####-WM01T◇◇EV◆			Yes	14.5	390.5	Ø115
	0.2 kW	H2L32####-WM02T◇◇EN	300, 375, 450	2	No	13.5	397	Ø115
		H2L32####-WM02T◇◇EV◆			Yes	15	453.5	□126
	0.4 kW	H2L32####-WM04T◇◇EN	80, 100, 120, 160, 200, 240	3	No	14	340	□137
		H2L32####-WM04T◇◇EV◆			Yes	15.5	401	□137
	0.75 kW	H2L32####-WR08T◇◇EN	5, 10, 15, 20, 25, 30, 40, 50, 60	4	No	21	391.5	□154
		H2L32####-WR08T◇◇EV◆			Yes	23.5	450.5	□154

Note: H, M, or B will be indicated as # in the nomenclature when the shaft material is stainless steel, L, R, or T will be indicated as # when it is carbon steel.
In addition, a reduction ratio will be indicated as ✱✱✱, a supply voltage code will be indicated as ◇◇, and a brake specification will be indicated as ◆.
Note: Please refer to page 280 for the performance table.

H2 Type Right Angle Shaft | Shaft Diameter **40** | **Foot** Mounting

The values in parentheses ( ) are the indications for gearmotors with brake.
The values in brackets [ ] are the indications for carbon steel output shafts.

<Figure 1>

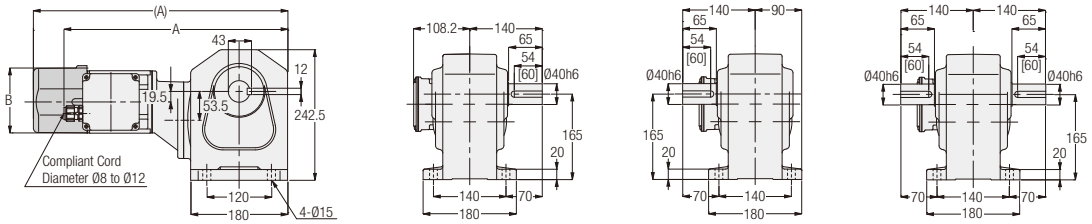

<Figure 2>

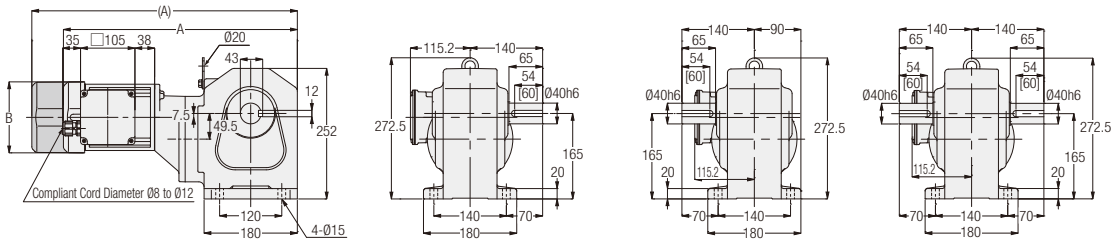

<Figure 3>

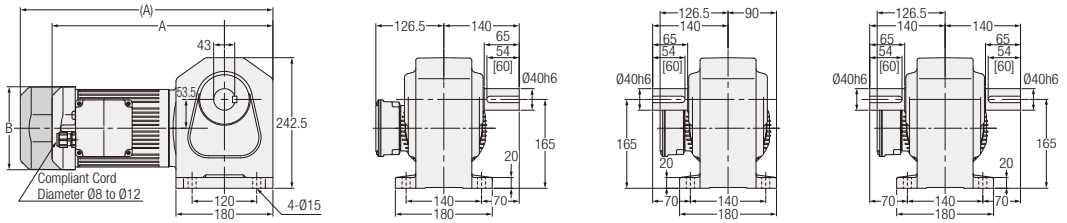

Note: Gearmotors with a motor power of 0.75 kW does not include the hanging plate.

<Figure 4>

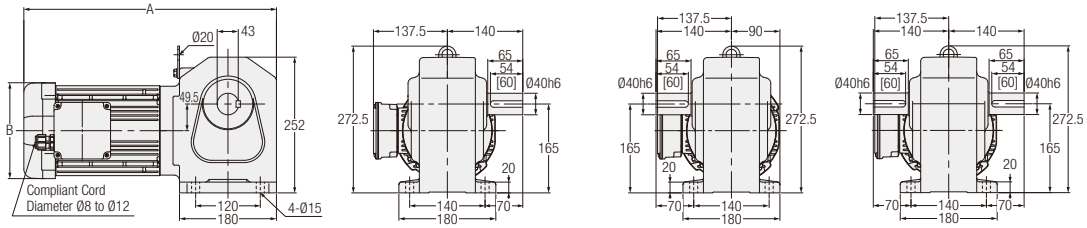

H Shaft
L Shaft

M Shaft
R Shaft

B Shaft
T Shaft

Number of Phases	Power	Part Number	Reduction Ratio	Figure Number	Brake	Approx. Weight (kg)	A	B
3-Phase	0.2 kW	H2L40####-WM02T◇◇EN	600, 750, 900, 1200, 1500	1	No	22	415.5	Ø115
		H2L40####-WM02T◇◇EV◆			Yes	23.5	472	□126
	0.4 kW	H2L40####-WM04T◇◇EN	300, 375, 450	2	No	24.5	451.5	□137
		H2L40####-WM04T◇◇EV◆			Yes	26	512.5	□137
	0.75 kW	H2L40####-WR08T◇◇EN	80, 100, 120, 160, 200, 240	3	No	29.5	410	□154
		H2L40####-WR08T◇◇EV◆			Yes	32	469	□154
	1.5 kW	H2L40####-WR15T◇◇EN	5, 10, 15, 20, 25, 30, 40, 50, 60	4	No	36.5	469	□178

Note: H, M, or B will be indicated as # in the nomenclature when the shaft material is stainless steel, L, R, or T will be indicated as # when it is carbon steel.
In addition, a reduction ratio will be indicated as ✻✻✻, a supply voltage code will be indicated as ◇◇, and a brake specification will be indicated as ◆.
Note: There are no gearmotors with motor power of 1.5 kW that have a brake.
Note: Please refer to page 280 for the performance table.

H2 Type Right Angle Shaft | Shaft Diameter **50** | **Foot** Mounting

The values in parentheses ( ) are the indications for gearmotors with brake.
The values in brackets [ ] are the indications for carbon steel output shafts.

<Figure 1>

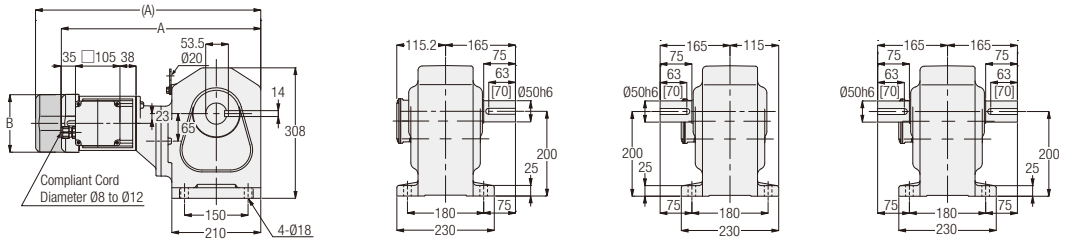

<Figure 2>

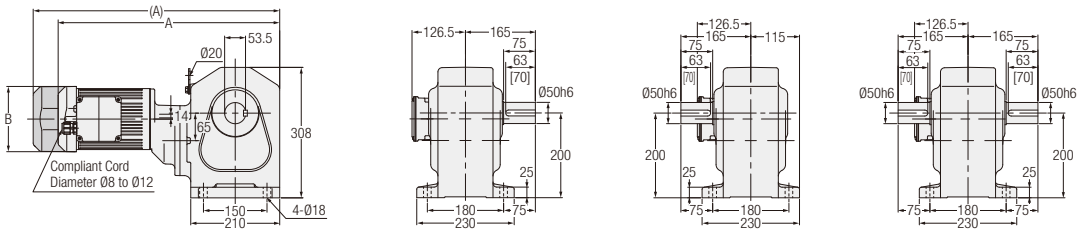

<Figure 3>

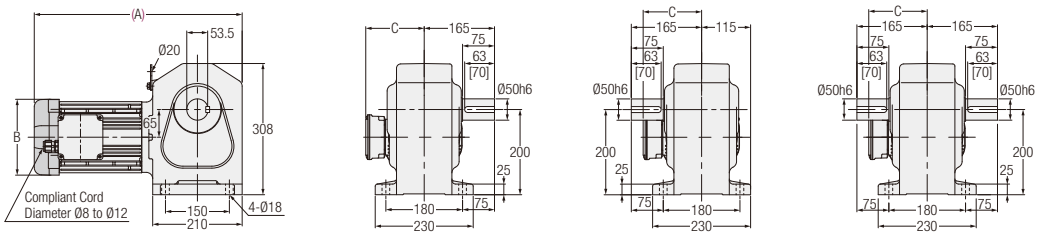

H Shaft
L Shaft

M Shaft
R Shaft

B Shaft
T Shaft

Number of Phases	Power	Part Number	Reduction Ratio	Figure Number	Brake	Approx. Weight (kg)	A	B	C
3-Phase	0.4 kW	H2L50#✱✱✱-WM04T◇◇EN	600, 750, 900, 1200, 1500	1	No	54.5	470.5	□137	-
		H2L50#✱✱✱-WM04T◇◇EV◆			Yes	56	531.5	□137	-
	0.75 kW	H2L50#✱✱✱-WR08T◇◇EN	300, 375, 450	2	No	62	523	□154	-
		H2L50#✱✱✱-WR08T◇◇EV◆			Yes	64.5	582	□154	-
	1.5 kW	H2L50#✱✱✱-WR15T◇◇EN	80, 100, 120, 160, 200, 240	3	No	65.5	488	□178	137.5
	2.2 kW	H2L50#✱✱✱-WR22T◇◇EN	5, 10, 15, 20, 25, 30, 40, 50, 60, 80, 100, 120	3	No	72.5	537.5	□192	147.5

Note: H, M, or B will be indicated as # in the nomenclature when the shaft material is stainless steel, L, R, or T will be indicated as # when it is carbon steel.
In addition, a reduction ratio will be indicated as ✱✱✱, a supply voltage code will be indicated as ◇◇, and a brake specification will be indicated as ◆.
Note: There are no gearmotors with motor power of 1.5 kW and 2.2 kW that have a brake.
Note: Please refer to page 281 for the performance table.

H Type Right Angle Shaft | Shaft Diameter **15** | **Flange** Mounting

The values in parentheses ( ) are the indications for gearmotors with brake.

<Figure 1>

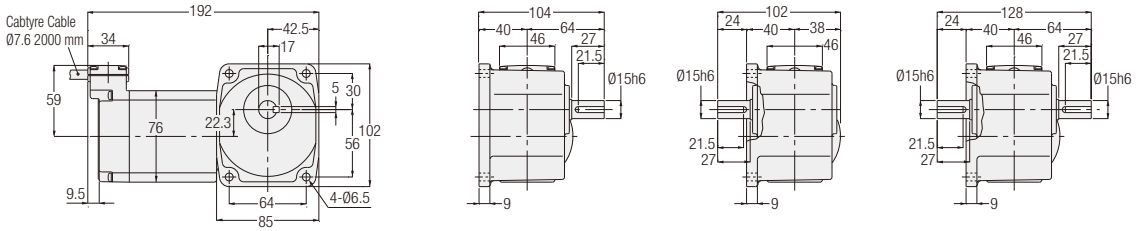

<Figure 2>

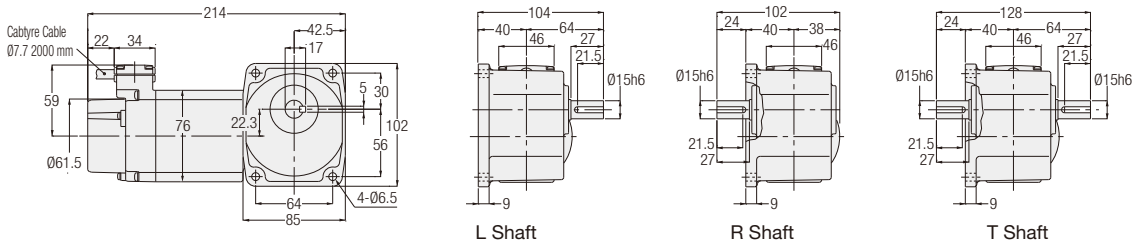

L Shaft R Shaft T Shaft

Number of Phases	Power	Part Number	Reduction Ratio	Figure Number	Brake	Approx. Weight (kg)
3-Phase	15 W	HFW-15#-***-T15	10, 15, 20, 25, 30, 40, 50, 60, 80, 100, 120, 160, 200, 240	1	No	3
		HFV-15#-***-T15		2	Yes	
	25 W	HFW-15#-***-T25	10, 15, 20, 25, 30, 40, 50, 60, 80, 100, 120, 160, 200, 240	1	No	3
		HFV-15#-***-T25		2	Yes	
	40 W	HFW-15#-***-T40	10, 15, 20, 25, 30, 40, 50, 60, 80, 100, 120	1	No	3
		HFV-15#-***-T40		2	Yes	
1-Phase	15 W	HFW-15#-***-S15	10, 15, 20, 25, 30, 40, 50, 60, 80, 100, 120, 160, 200, 240	1	No	3
		HFV-15#-***-S15		2	Yes	
	25 W	HFW-15#-***-S25	10, 15, 20, 25, 30, 40, 50, 60, 80, 100, 120, 160, 200, 240	1	No	3
		HFV-15#-***-S25		2	Yes	

Note: A shaft arrangement (L, R, T) will be indicated as # in the nomenclature. In addition, a reduction ratio will be indicated as ***.
Note: Please refer to page 278 for the performance table.

H Type Right Angle Shaft | Shaft Diameter **18** | **Flange** Mounting

The values in parentheses ( ) are the indications for gearmotors with brake.

<Figure 1>

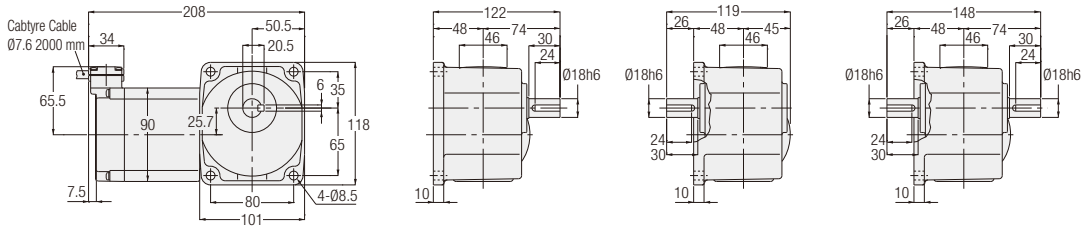

<Figure 2>

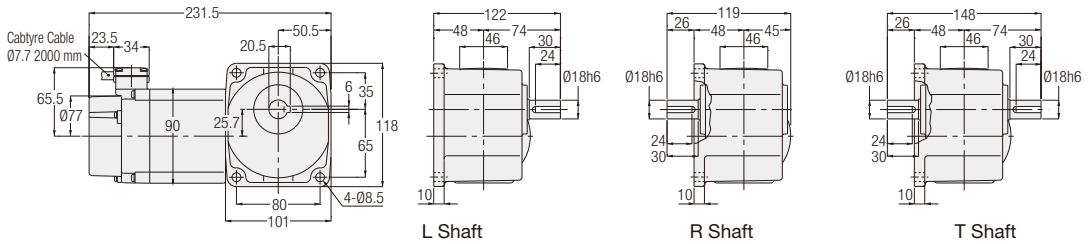

Number of Phases	Power	Part Number	Reduction Ratio	Figure Number	Brake	Approx. Weight (kg)
3-Phase	40 W	HFW-18#-***-T40	160, 200, 240	1	No	4
		HFV-18#-***-T40		2	Yes	
	60 W	HFW-18#-***-T60	10, 15, 20, 25, 30, 40, 50, 60, 80, 100, 120, 160, 200, 240	1	No	4
		HFV-18#-***-T60		2	Yes	
	90 W	HFW-18#-***-T90	10, 15, 20, 25, 30, 40, 50, 60, 80, 100, 120, 160, 200, 240	1	No	4
		HFV-18#-***-T90		2	Yes	
1-Phase	40 W	HFW-18#-***-S40	10, 15, 20, 25, 30, 40, 50, 60, 80, 100, 120, 160, 200, 240	1	No	4
		HFV-18#-***-S40		2	Yes	

Note: A shaft arrangement (L, R, T) will be indicated as # in the nomenclature. In addition, a reduction ratio will be indicated as ***.
Note: Please refer to page 278 for the performance table.

H2 Type Right Angle Shaft | Shaft Diameter **22** | **Flange** Mounting

The values in parentheses ( ) are the indications for gearmotors with brake.
The values in brackets [ ] are the indications for carbon steel output shafts.

<Figure 1>

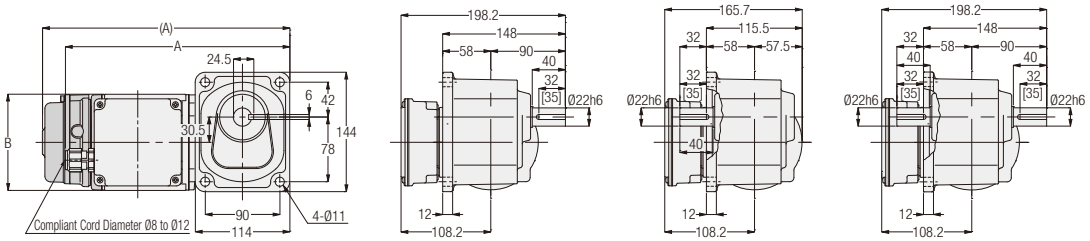

<Figure 2>

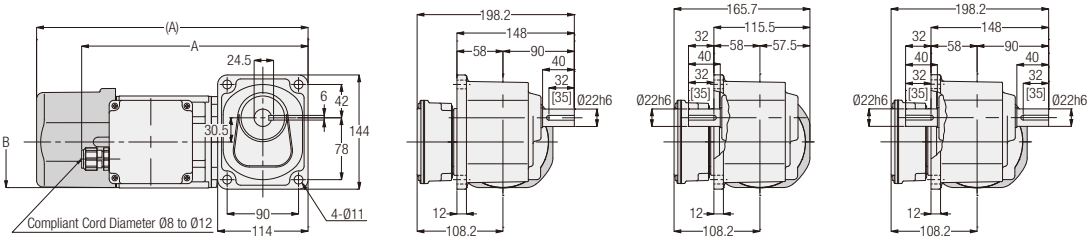

H Shaft
L Shaft

M Shaft
R Shaft

B Shaft
T Shaft

Number of Phases	Power	Part Number	Reduction Ratio	Figure Number	Brake	Approx. Weight (kg)	A	B
3-Phase	0.1 kW	H2F22####-WM01T◇◇EN	5, 10, 15, 20, 25, 30, 40, 50, 60, 80, 100, 120, 160, 200, 240	1	No	6.5	271	Ø115
		H2F22####-WM01T◇◇EV◆			Yes	8	298.5	Ø115
	0.2 kW	H2F22####-WM02T◇◇EN	5, 10, 15, 20, 25, 30, 40, 50, 60	2	No	7.5	286	Ø115
		H2F22####-WM02T◇◇EV◆			Yes	9	342.5	□126

Note: H, M, or B will be indicated as # in the nomenclature when the shaft material is stainless steel, L, R, or T will be indicated as # when it is carbon steel.
In addition, a reduction ratio will be indicated as ***, a supply voltage code will be indicated as ◇◇, and a brake specification will be indicated as ◆.
Note: Please refer to page 280 for the performance table.

MEMO

3. Gearmotors with Clutch/Brake

3-1. Motor Characteristics Table

H2 Type 3-Phase Standard Voltage

Series	Power	Voltage (V)	Frequency (Hz)	Rated Current (A)	Rated Speed (r/min)
MID	0.2 kW IE2	200/200/220	50/60/60	1.1/1.0/1.0	1400/1680/1700
	0.4 kW IE2	200/200/220	50/60/60	2.1/1.8/1.8	1400/1680/1700
	0.75 kW IE3	200/200/220	50/60/60	3.5/3.2/3.1	1450/1740/1750

The rated current in the motor characteristics table is the current data for the motor operating without a gearbox.
With regard to gearmotors with a brake, it is necessary to consider the current value flowing through the brake as needed.
For more details, please contact your nearest Sales Office or the CS Center.

H2 Type 3-Phase High Voltage (400 V Class)

Series	Power	Voltage (V)	Frequency (Hz)	Rated Current (A)	Rated Speed (r/min)
MID	0.2 kW IE2	380/400/400/440	50/50/60/60	0.56/0.56/0.5/0.5	1390/1400/1680/1710
	0.4 kW IE2	380/400/400/440	50/50/60/60	1.0/1.0/0.9/0.9	1390/1400/1680/1710
	0.75 kW IE3	380/400/400/440	50/50/60/60	1.73/1.72/1.58/1.54	1440/1450/1740/1750

The rated current in the motor characteristics table is the current data for the motor operating without a gearbox.
With regard to gearmotors with a brake, it is necessary to consider the current value flowing through the brake as needed.
For more details, please contact your nearest Sales Office or the CS Center.

3-2. Performance Table

[Notes]
- The output shaft speed is the value relative to the synchronous speed of the motor and the reduction ratio.
- In the performance table, ▭ indicates that the L shaft rotates clockwise and the R and T shafts rotate counterclockwise when viewed from the output shaft side when the connection is made as shown on page 553 (CW). (Refer to the figure on the right)
- Allowable output shaft O.H.L. is the value at the middle of the output shaft.
- The "*" mark indicates a limited torque type. Please make sure to check the allowable output shaft torque in the performance table.
- Please avoid using gearmotors with clutch/brake in vertical operation (lifting). There is a danger of falling during a power outage.

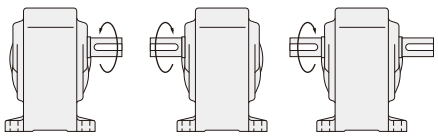

L Shaft R Shaft T Shaft

Motor Power	Frame Size	Reduction Ratio	Actual Reduction Ratio	Output Shaft Speed r/min		Allowable Output Shaft Torque N·m		Allowable Output Shaft O.H.L. N	Drawings Foot Mount	Drawings Flange Mount
				50 Hz	60 Hz	50 Hz	60 Hz	50 Hz		
3-Phase 0.2 kW	22	1/5	1/5	300	360	5.7	4.8	588	P.296	P.298
		1/10	1/10	150	180	12	9.5	931		
		1/15	1/15	100	120	18	15	1030		
		1/20	1/20	75	90	23	19	1180		
		1/25	1/25	60	72	28	24	1270		
		1/30	1/30	50	60	34	28	1370		
		1/40	1/40	37.5	45	46	38	1570		
		1/50	1/50	30	36	57	48	1720		
		1/60	1/59	25	30	69	57	1810		
	28	1/80	1/80	18.8	22.5	88	74	2450	P.296	-
		1/100	1/100	15	18	111	92	2650		
		1/120	1/120	12.5	15	133	111	2740		
		1/160	1/160	9.4	11.2	177	148	2840		
		1/200	1/200	7.5	9	221	184	2840		
		1/240	1/236	6.3	7.5	245	221	2840		
3-Phase 0.4 kW	28	1/5	1/5	300	360	12	9.5	931	P.296	-
		1/10	1/10	150	180	23	19	1470		
		1/15	1/15	100	120	34	28	1670		
		1/20	1/20	75	90	46	38	1860		
		1/25	1/25	60	72	57	48	2010		
		1/30	1/30	50	60	69	57	2210		
		1/40	1/40	37.5	45	92	76	2450		
		1/50	1/50	30	36	115	95	2650		
		1/60	1/59	25	30	137	115	2740		
	32	1/80	1/80	18.8	22.5	177	148	3430	P.297	-
		1/100	1/100	15	18	221	184	3820		
		1/120	1/120	12.5	15	266	221	4120		
		1/160	1/160	9.4	11.2	355	295	4120		
		1/200	1/200	7.5	9	431	369	4120		
		* 1/240	1/236	6.3	7.5	431	431	4120		
3-Phase 0.75 kW	32	1/5	1/5	300	360	22	18	1520	P.297	-
		1/10	1/10	150	180	43	36	2010		
		1/15	1/15	100	120	65	54	2210		
		1/20	1/20	75	90	86	72	2450		
		1/25	1/25	60	72	108	89	2740		
		1/30	1/30	50	60	128	107	2940		
		1/40	1/40	37.5	45	172	143	3430		
		1/50	1/50	30	36	215	179	3820		
		1/60	1/59	25	30	258	215	4120		
	40	1/80	1/80	18.8	22.5	332	277	5780	P.297	-
		1/100	1/100	15	18	416	346	6080		
		1/120	1/120	12.5	15	498	415	6270		
		1/160	1/160	9.4	11.2	664	554	6470		
		1/200	1/200	7.5	9	764	692	6660		
		* 1/240	1/240	6.3	7.5	764	764	6660		

3-3. Drawings

H2 Type Right Angle Shaft | Shaft Diameter 22 | Foot Mounting

<Figure 1>

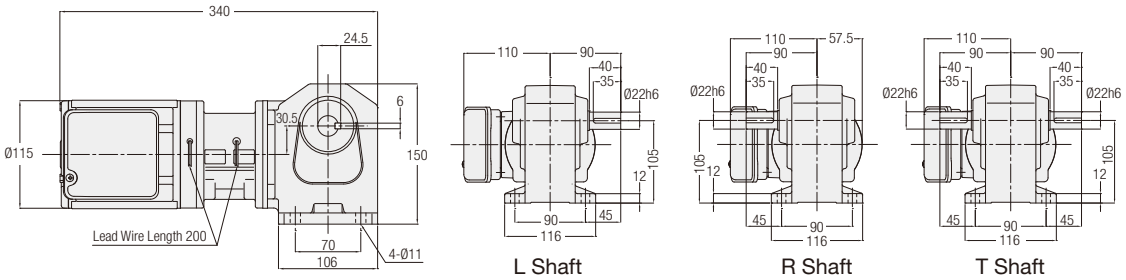

Number of Phases	Power	Part Number	Reduction Ratio	Figure Number	Approx. Weight (kg)
3-Phase	0.2 kW	H2L22#✱✱✱-EM02T◇JTN	5, 10, 15, 20, 25, 30, 40, 50, 60	1	9.5

Note: A shaft arrangement (L, R, T) will be indicated as # in the nomenclature. In addition, a reduction ratio will be indicated as ✱✱✱ and a supply voltage code will be indicated as ◇.

Note: Please refer to page 295 for the performance table.

H2 Type Right Angle Shaft | Shaft Diameter 28 | Foot Mounting

<Figure 2>

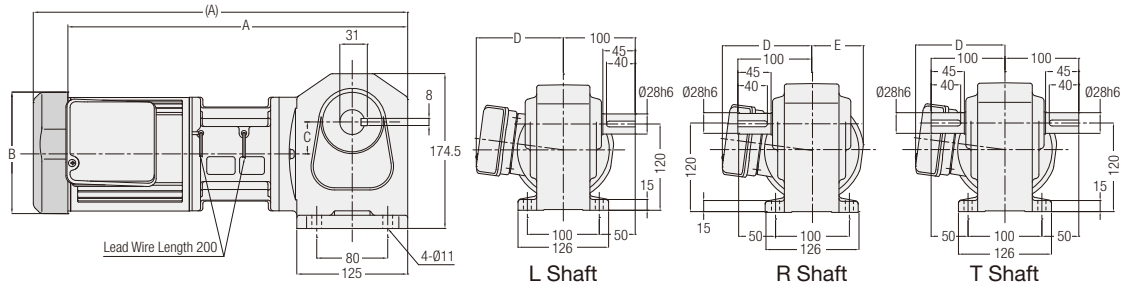

Note: The value in parentheses is the value of a gearmotor with a motor power of 0.4 kW.

Number of Phases	Power	Part Number	Reduction Ratio	Figure Number	Approx. Weight (kg)	A	B	C	D	E
3-Phase	0.2 kW	H2L28#✱✱✱-EM02T◇JTN	80, 100, 120, 160, 200, 240	2	11.5	352.5	Ø115	39	110	57.5
	0.4 kW	H2L28#✱✱✱-EM04T◇JTN	5, 10, 15, 20, 25, 30, 40, 50, 60	2	14	422	□137	36	121	70

Note: A shaft arrangement (L, R, T) will be indicated as # in the nomenclature. In addition, a reduction ratio will be indicated as ✱✱✱ and a supply voltage code will be indicated as ◇.

Note: Please refer to page 295 for the performance table.

H2 Type Right Angle Shaft | Shaft Diameter 32 | Foot Mounting

<Figure 1>

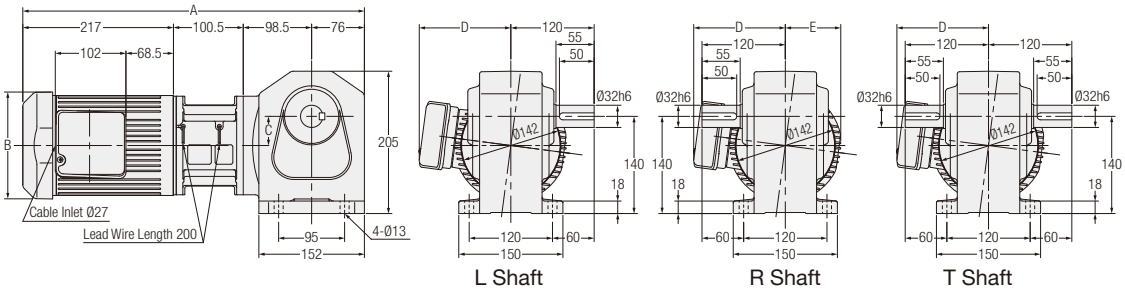

Number of Phases	Power	Part Number	Reduction Ratio	Figure Number	Approx. Weight (kg)	A	B	C	D	E
3-Phase	0.4 kW	H2L32####-EM04T◇JTN	80, 100, 120, 160, 200, 240	1	17	441	□137	45	121	75
	0.75 kW	H2L32####-ER08T◇JTN	5, 10, 15, 20, 25, 30, 40, 50, 60	1	24.5	492	□154	42	132	80

Note: A shaft arrangement (L, R, T) will be indicated as # in the nomenclature. In addition, a reduction ratio will be indicated as *** and a supply voltage code will be indicated as ◇.

Note: Please refer to page 295 for the performance table.

H2 Type Right Angle Shaft | Shaft Diameter 40 | Foot Mounting

<Figure 2>

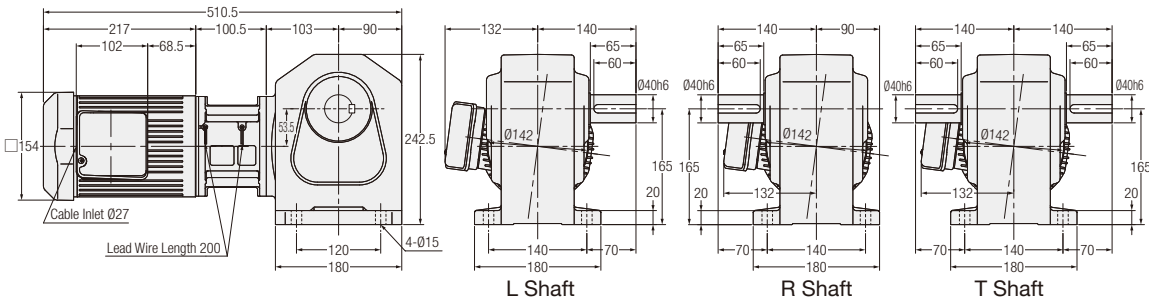

Number of Phases	Power	Part Number	Reduction Ratio	Figure Number	Approx. Weight (kg)
3-Phase	0.75 kW	H2L40####-ER08T◇JTN	80, 100, 120, 160, 200, 240	2	33

Note: A shaft arrangement (L, R, T) will be indicated as # in the nomenclature. In addition, a reduction ratio will be indicated as *** and a supply voltage code will be indicated as ◇.

Note: Please refer to page 295 for the performance table.

H2 Type Right Angle Shaft | Shaft Diameter 22 | Flange Mounting

<Figure 1>

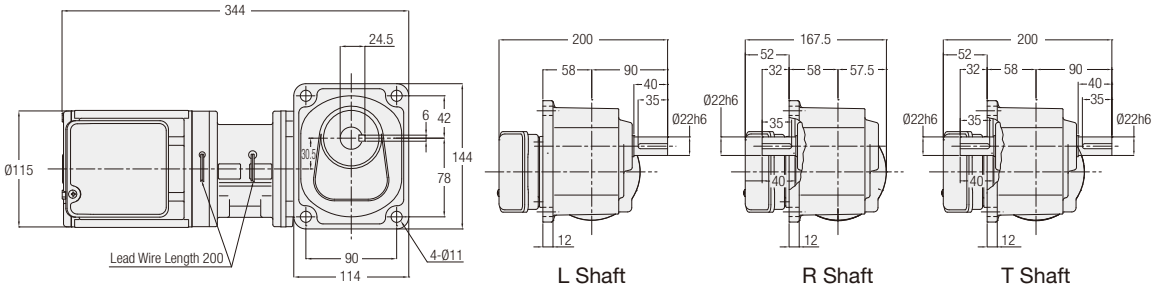

Number of Phases	Power	Part Number	Reduction Ratio	Figure Number	Approx. Weight (kg)
3-Phase	0.2 kW	H2F22####-EM02T◇JTN	5, 10, 15, 20, 25, 30, 40, 50, 60	1	9.5

Note: A shaft arrangement (L, R, T) will be indicated as # in the nomenclature. In addition, a reduction ratio will be indicated as *** and a supply voltage code will be indicated as ◇.

Note: Please refer to page 295 for the performance table.

MEMO

4. Speed Control Gearmotors

4-1. Properties and Motor Characteristics Table

Properties

This gearmotor has a motor provided with a rate generator (AC generator) for speed detection and can control the speed freely in a wide range of 50 to 1400 r/min (50 Hz) or 50 to 1700 r/min (60 Hz) by means of a dedicated speed controller.

■ Properties

❶ Wide variable speed range

Our original circuit design enables the induction gearmotor to operate continuously from a low speed range of 50 r/min.

Power Source Frequency	Variable speed range
50 Hz	50 to 1400 r/min
60 Hz	50 to 1700 r/min

❷ Outstanding output characteristic

The induction motor ensures a high allowable load torque value in the low speed range and has a wide high-speed range characteristic as shown in the right figure.

❸ Wide variety of types

Induction gearmotors are available in eight main types according to applications: two U types (100 V, 200 V) connectable by means of a lead wire with a connector and six plug-in P types (100 V, 200 V).

Note: Please refer to page 631 for detailed specifications.

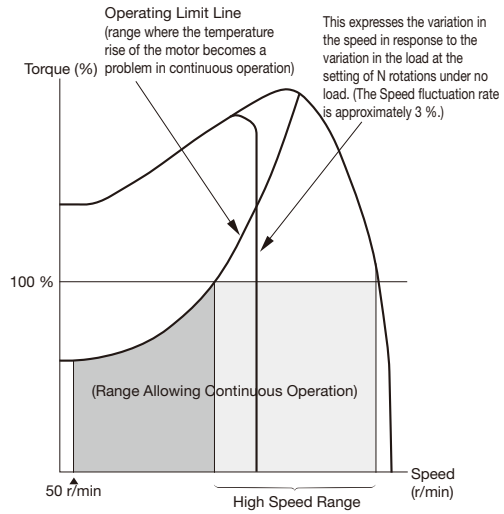

Note: The same speed can be obtained from a speed control gearmotor, regardless of the power supply frequency. For example, a speed set in the 50 Hz region remains unchanged also in the 60 Hz region, and the same speed can be obtained. (However, the maximum speed is within the range of 1400 r/min.)

Motor Characteristics Table

H Type 1-Phase (Speed Control Gearmotor)

Series	Power (W)	Voltage (V)	Frequency (Hz)	Frame Size	Max Current (A)	High Speed Range (r/min)	Capacitor (μF)
MINI	15 W	100/100	50/60	15	0.6/0.6	500 to 1350/550 to 1650	6
				22	0.6/0.6	500 to 1350/550 to 1650	6
		200/200	50/60	15	0.3/0.3	600 to 1400/750 to 1700	1.5
				22	0.3/0.3	600 to 1400/750 to 1700	1.5
	25 W	100/100	50/60	15	0.6/0.6	750 to 1350/1000 to 1650	8
				22	0.6/0.6	750 to 1350/1000 to 1650	8
				28	0.7/0.7	550 to 1400/650 to 1650	8
		200/200	50/60	15	0.4/0.4	850 to 1350/1000 to 1650	2
				22	0.4/0.4	850 to 1350/1000 to 1650	2
				28	0.4/0.4	600 to 1350/800 to 1650	2
	40 W	100/100	50/60	18	0.9/0.9	800 to 1350/1050 to 1650	12
				28	0.9/0.9	800 to 1350/1050 to 1650	12
				32	0.9/0.9	800 to 1350/1050 to 1650	12
		200/200	50/60	18	0.5/0.5	900 to 1350/1300 to 1650	3
				28	0.5/0.5	900 to 1350/1300 to 1650	3
				32	0.5/0.5	900 to 1350/1300 to 1650	3
	60 W	100/100	50/60	18	1.0/1.7	700 to 1350/800 to 1650	20
				28	1.0/1.7	700 to 1350/800 to 1650	20
				32	1.0/1.7	700 to 1350/800 to 1650	20
		200/200	50/60	18	0.8/0.9	700 to 1350/800 to 1650	5
				28	0.8/0.9	700 to 1350/800 to 1650	5
				32	0.8/0.9	700 to 1350/800 to 1650	5
	90 W	100/100	50/60	18	1.4/2.0	950 to 1300/1150 to 1600	26
				28	1.4/2.0	950 to 1300/1150 to 1600	26
				32	1.4/2.0	950 to 1300/1150 to 1600	26
				40	1.4/2.0	950 to 1350/1100 to 1650	26
		200/200	50/60	18	0.9/1.0	1000 to 1350/1150 to 1600	6.5
				28	0.9/1.0	1000 to 1350/1150 to 1600	6.5
				32	0.9/1.0	1000 to 1350/1150 to 1600	6.5
				40	1.0/1.1	900 to 1350/1100 to 1650	6.5

4-2. Graph for Speed Characteristics

Torque-Speed Characteristic Graph

<1-Phase15 W>

■ 100 V

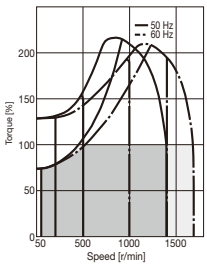

■ 200 V

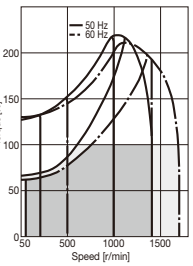

<1-Phase 25 W>

■ Frame Size 15, 22/100 V

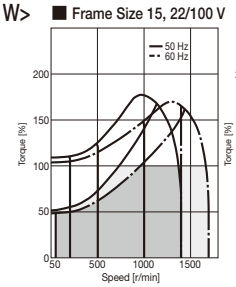

■ Frame Size 15, 22/200 V

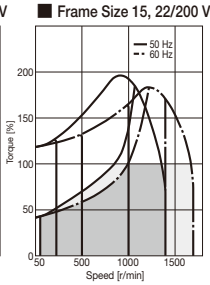

■ Frame Size 28/100 V

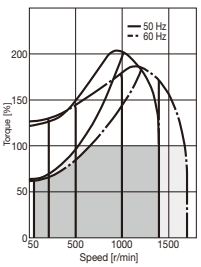

■ Frame Size 28/200 V

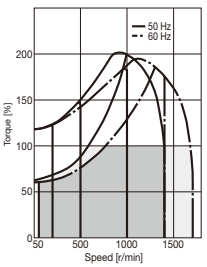

<1-Phase 40 W>

■ 100 V

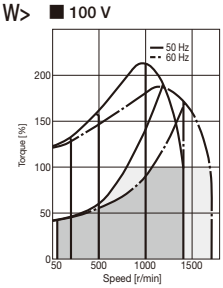

■ 200 V

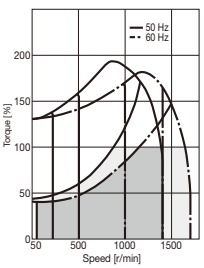

<1-Phase 60 W>

■ 100 V

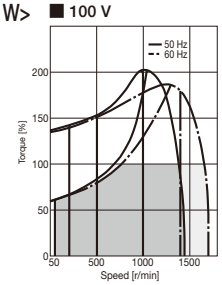

■ 200 V

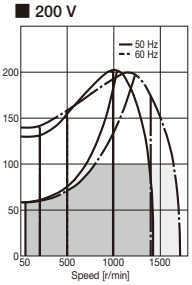

<1-Phase 90 W>

■ Frame Size 18, 28, 32/100 V

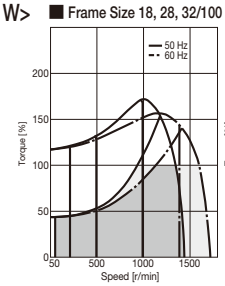

■ Frame Size 18, 28, 32/200 V

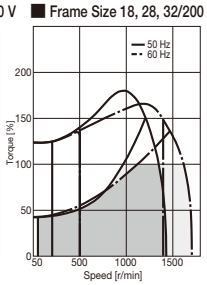

■ Frame Size 40/100 V

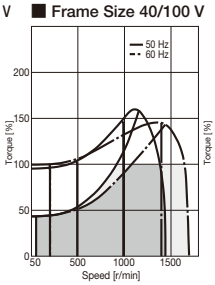

■ Frame Size 40/200 V

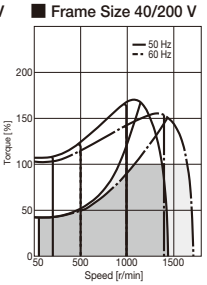

Note: 100 % torque represents the allowable output shaft torque at high speed.

4-3. Performance Table

H Type Speed Control Gearmotors

[Notes]
- The output shaft speed is the value relative to the synchronous speed of the motor and the reduction ratio.
- Three output shaft types, L, R, and T, are available for the H Type.
- The allowable output shaft torque at high speed represents the allowable output shaft torque in the high speed range (r/min).
- The value (%) of the allowable output shaft torque at 50 r/min represents the ratio to the allowable output shaft torque at high speed.
- Allowable output shaft O.H.L. is the value at the middle of the output shaft.
- The "*" mark indicates a limited torque type. Please make sure to check the allowable output shaft torque in the performance table.
- In the performance table, ▭ indicates that the L shaft rotates clockwise and the R and T shafts rotate counterclockwise when viewed from the output shaft side when the connection is made as shown on page 546 (CW). (Refer to the figure on the right)

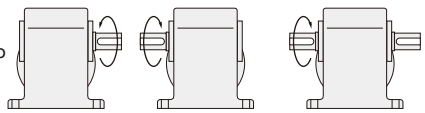

Series	Motor Power	Frame Size	Reduction Ratio	Actual Reduction Ratio	Output Shaft Speed r/min 50 Hz	Output Shaft Speed r/min 60 Hz	Allowable Output Shaft O.H.L. N	Allowable Output Shaft Torque At High Speed N·m	Allowable Output Shaft Torque At 50 r/min (%)	Drawings Foot Mount	Drawings Flange Mount
MINI	1-Phase 15 W	15	1/10	1/10	150	180	343	0.69	70 (100 V) 60 (200 V)	P.305	P.310
			1/15	1/15	100	120	441	0.98			
			1/20	1/20	75	90	539	1.27			
			1/25	1/25	60	72	588	1.67			
			1/30	1/30	50	60	686	1.96			
			1/40	1/40	37.5	45	784	2.65			
			1/50	1/50	30	36	882	3.33			
			1/60	1/60	25	30	882	3.92			
			1/80	1/80	18.8	22.5	980	5.00			
			1/100	1/100	15	18	980	6.27			
			1/120	1/120	12.5	15	1080	7.45			
			1/160	1/160	9.4	11.2	1080	9.80			
			1/200	1/200	7.5	9	1080	12.7			
			1/240	1/240	6.3	7.5	1080	14.7			
		22	1/300	1/300	5	6	1760	16.7	70 (100 V) 60 (200 V)	P.307	P.312
			1/375	1/375	4	4.8	1760	20.6			
			1/450	2/885	3.3	4	1760	25.5			
			1/600	1/600	2.5	3	1760	33.3			
			1/750	1/750	2	2.4	1760	42.1			
			1/900	1/885	1.7	2	1760	50.0			
			1/1200	1/1160	1.3	1.5	1760	66.6			
			1/1500	1/1450	1	1.2	1760	83.3			
			1/1800	1/1711	0.8	1	1760	98.0			
	1-Phase 25 W	15	1/10	4/41	150	180	343	1.08	50 (100 V) 45 (200 V)	P.305	P.310
			1/15	8/123	100	120	441	1.67			
			1/20	2/41	75	90	539	2.25			
			1/25	8/205	60	72	588	2.74			
			1/30	4/123	50	60	686	3.33			
			1/40	1/41	37.5	45	784	4.41			
			1/50	4/205	30	36	882	5.49			
			1/60	20/1189	25	30	882	6.66			
			1/80	1/82	18.8	22.5	980	8.43			
			1/100	2/205	15	18	980	10.8			
			1/120	1/123	12.5	15	1080	12.7			
			1/160	1/164	9.4	11.2	1080	16.7			
			1/200	1/205	7.5	9	1080	20.6			
			1/240	5/1189	6.3	7.5	1080	25.5			
		22	1/300	1/300	5	6	1760	28.4	50 (100 V) 45 (200 V)	P.307	P.312
			1/375	1/375	4	4.8	1760	35.3			
			1/450	2/885	3.3	4	1760	42.1			
			1/600	1/600	2.5	3	1760	55.9			
			1/750	1/750	2	2.4	1760	69.6			
			1/900	1/885	1.7	2	1760	84.3			
		28	1/1200	1/1160	1.3	1.5	2740	108	60 (100 V) (200 V)	P.308	-
			1/1500	1/1450	1	1.2	2740	137			
			1/1800	1/1711	0.8	1	2740	167			

Series	Motor Power	Frame Size	Reduction Ratio	Actual Reduction Ratio	Output Shaft Speed r/min 50 Hz	Output Shaft Speed r/min 60 Hz	Allowable Output Shaft O.H.L. N	Allowable Output Shaft Torque At High Speed N·m	Allowable Output Shaft Torque At 50 r/min (%)	Drawings Foot Mount	Drawings Flange Mount
MINI	1-Phase 40 W	18	1/10	4/41	150	180	343	1.76	40 (100 V) (200 V)	P.306	P.311
			1/15	8/123	100	120	441	2.65			
			1/20	2/41	75	90	539	3.53			
			1/25	8/205	60	72	588	4.41			
			1/30	4/123	50	60	686	5.29			
			1/40	1/41	37.5	45	784	7.06			
			1/50	4/205	30	36	882	8.82			
			1/60	20/1189	25	30	882	10.8			
			1/80	1/82	18.8	22.5	980	13.7			
			1/100	2/205	15	18	980	16.7			
			1/120	1/123	12.5	15	1080	20.6			
			1/160	1/164	9.4	11.2	1370	26.5			
			1/200	1/205	7.5	9	1370	33.3			
			1/240	1/246	6.3	7.5	1370	40.2			
		28	1/300	1/300	5	6	2740	45.1	40 (100 V) (200 V)	P.308	-
			1/375	1/375	4	4.8	2740	55.9			
			1/450	2/885	3.3	4	2740	67.6			
			1/600	1/600	2.5	3	2740	90.2			
			1/750	1/750	2	2.4	2740	118			
			1/900	1/885	1.7	2	2740	137			
		32	1/1200	1/1200	1.3	1.5	5100	176	40 (100 V) (200 V)	P.309	-
			1/1500	1/1500	1	1.2	5100	225			
			1/1800	1/1800	0.8	1	5100	274			
	1-Phase 60 W	18	1/10	4/41	150	180	343	2.74	60 (100 V) 55 (200 V)	P.306	P.311
			1/15	8/123	100	120	441	4.12			
			1/20	2/41	75	90	539	5.49			
			1/25	8/205	60	72	588	6.96			
			1/30	4/123	50	60	686	8.33			
			1/40	1/41	37.5	45	784	10.8			
			1/50	4/205	30	36	882	13.7			
			1/60	2/123	25	30	882	16.7			
			1/80	1/82	18.8	22.5	1270	20.6			
			1/100	2/205	15	18	1270	26.5			
			1/120	1/123	12.5	15	1370	31.4			
			1/160	1/164	9.4	11.2	1370	42.1			
			1/200	1/205	7.5	9	1370	52.9			
			* 1/240	1/246	6.3	7.5	1370	53.9			
		28	1/300	1/300	5	6	2740	70.6	60 (100 V) 55 (200 V)	P.308	-
			1/375	1/375	4	4.8	2740	88.2			
			1/450	2/885	3.3	4	2740	108			
			1/600	1/600	2.5	3	2740	137			
			1/750	1/750	2	2.4	2740	176			
			1/900	1/885	1.7	2	2740	216			
		32	1/1200	1/1200	1.3	1.5	5100	284	60 (100 V) 55 (200 V)	P.309	-
			1/1500	1/1500	1	1.2	5100	353			
			1/1800	1/1800	0.8	1	5100	421			

Series	Motor Power	Frame Size	Reduction Ratio	Actual Reduction Ratio	Output Shaft Speed r/min 50 Hz	Output Shaft Speed r/min 60 Hz	Allowable Output Shaft O.H.L. N	Allowable Output Shaft Torque At High Speed N·m	Allowable Output Shaft Torque At 50 r/min (%)	Drawings Foot Mount	Drawings Flange Mount
MINI	1-Phase 90 W	18	1/10	4/41	150	180	441	4.12	40 (100 V) (200 V)	P.306	P.311
			1/15	8/123	100	120	588	6.17			
			1/20	2/41	75	90	735	8.33			
			1/25	8/205	60	72	882	10.8			
			1/30	4/123	50	60	980	12.7			
			1/40	1/41	37.5	45	1080	16.7			
			1/50	4/205	30	36	1180	20.6			
			1/60	2/123	25	30	1180	24.5			
			1/80	1/82	18.8	22.5	1270	31.4			
			1/100	2/205	15	18	1270	39.2			
			1/120	1/123	12.5	15	1370	47.0			
			* 1/160	1/164	9.4	11.2	1370	53.9			
			* 1/200	1/205	7.5	9	1370	53.9			
			* 1/240	1/246	6.3	7.5	1370	53.9			
		28	1/300	1/300	5	6	2740	108	40 (100 V) (200 V)	P.308	-
			1/375	1/375	4	4.8	2740	137			
			1/450	2/885	3.3	4	2740	157			
		32	1/600	1/600	2.5	3	5100	216	40 (100 V) (200 V)	P.309	-
			1/750	1/750	2	2.4	5100	265			
			1/900	1/900	1.7	2	5100	314			
		40	1/1200	1/1200	1.3	1.5	7060	421	40 (100 V) (200 V)	P.310	-
			1/1500	1/1500	1	1.2	7060	529			
			1/1800	1/1800	0.8	1	7060	637			

Note 1: Please be sure to read the notes on page 302.

4-4. Drawings

H Type Right Angle Shaft | Shaft Diameter **15** | **Foot** Mounting

<Figure 1>

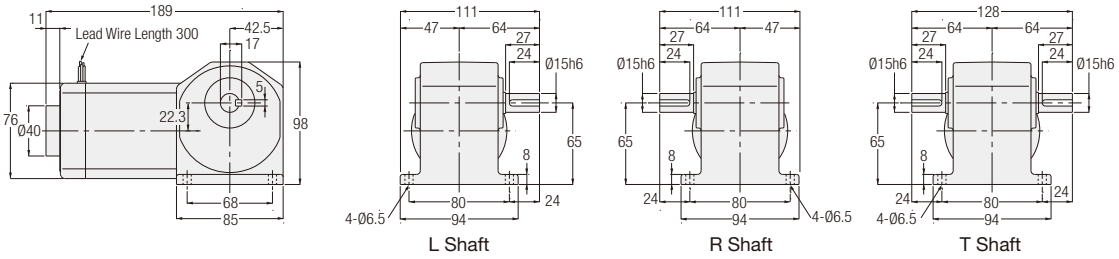

Number of Phases	Power	Part Number	Reduction Ratio	Figure Number	Controller	Approx. Weight (kg)
1-Phase	15 W	HLU-15#-***-S15	10, 15, 20, 25, 30, 40, 50, 60, 80, 100, 120, 160, 200, 240	1	Set	3
		HLU-15#-***-S15W				
		HLP-15#-***-S15	10, 15, 20, 25, 30, 40, 50, 60, 80, 100, 120, 160, 200, 240	1	Sold Separately	3
		HLP-15#-***-S15W				
	25 W	HLU-15#-***-S25	10, 15, 20, 25, 30, 40, 50, 60, 80, 100, 120, 160, 200, 240	1	Set	3
		HLU-15#-***-S25W				
		HLP-15#-***-S25	10, 15, 20, 25, 30, 40, 50, 60, 80, 100, 120, 160, 200, 240	1	Sold Separately	3
		HLP-15#-***-S25W				

Note: A shaft arrangement (L, R, T) will be indicated as # in the nomenclature. In addition, a reduction ratio will be indicated as ***.
Note: Please refer to page 302 for the performance table.

H Type Right Angle Shaft | Shaft Diameter 18 | Foot Mounting

<Figure 1>

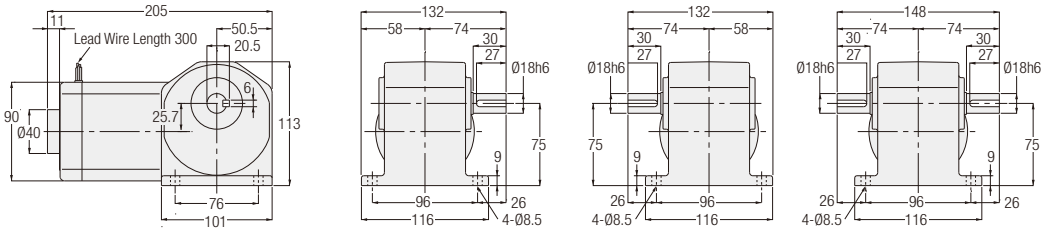

<Figure 2>

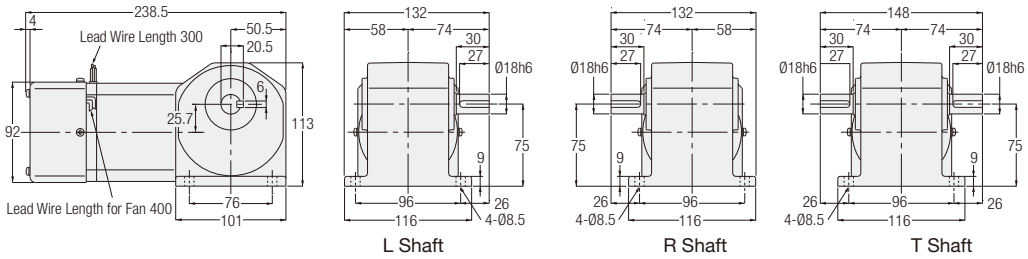

Number of Phases	Power	Part Number	Reduction Ratio	Figure Number	Controller	Approx. Weight (kg)
1-Phase	40 W	HLU-18#-✱✱✱-S40	10, 15, 20, 25, 30, 40, 50, 60, 80, 100, 120, 160, 200, 240	1	Set	4
		HLU-18#-✱✱✱-S40W				
		HLP-18#-✱✱✱-S40	10, 15, 20, 25, 30, 40, 50, 60, 80, 100, 120, 160, 200, 240	1	Sold Separately	4
		HLP-18#-✱✱✱-S40W				
	60 W	HLU-18#-✱✱✱-S60	10, 15, 20, 25, 30, 40, 50, 60, 80, 100, 120, 160, 200, 240	2	Set	4
		HLU-18#-✱✱✱-S60W				
		HLP-18#-✱✱✱-S60	10, 15, 20, 25, 30, 40, 50, 60, 80, 100, 120, 160, 200, 240	2	Sold Separately	4
		HLP-18#-✱✱✱-S60W				
	90 W	HLU-18#-✱✱✱-S90	10, 15, 20, 25, 30, 40, 50, 60, 80, 100, 120, 160, 200, 240	2	Set	4
		HLU-18#-✱✱✱-S90W				
		HLP-18#-✱✱✱-S90	10, 15, 20, 25, 30, 40, 50, 60, 80, 100, 120, 160, 200, 240	2	Sold Separately	4
		HLP-18#-✱✱✱-S90W				

Note: A shaft arrangement (L, R, T) will be indicated as # in the nomenclature. In addition, a reduction ratio will be indicated as ✱✱✱.
Note: Please refer to page 303 for the performance table.

H Type Right Angle Shaft | Shaft Diameter **22** | **Foot** Mounting

<Figure 1>

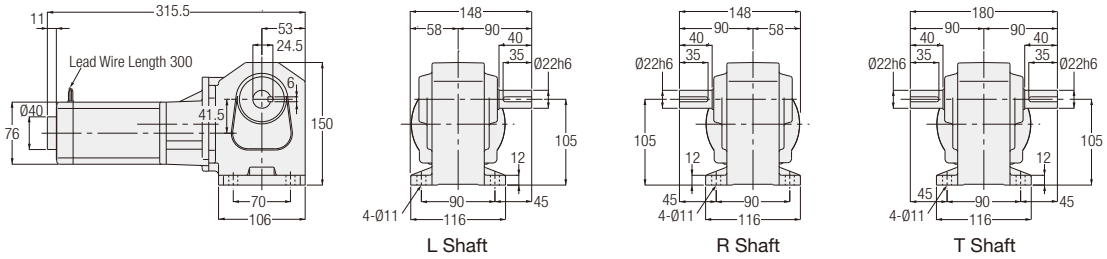

Number of Phases	Power	Part Number	Reduction Ratio	Figure Number	Controller	Approx. Weight (kg)
1-Phase	15 W	HLU-22#-***-S15	300, 375, 450, 600, 750, 900, 1200, 1500, 1800	1	Set	6
		HLU-22#-***-S15W				
		HLP-22#-***-S15	300, 375, 450, 600, 750, 900, 1200, 1500, 1800	1	Sold Separately	6
		HLP-22#-***-S15W				
	25 W	HLU-22#-***-S25	300, 375, 450, 600, 750, 900	1	Set	6
		HLU-22#-***-S25W				
		HLP-22#-***-S25	300, 375, 450, 600, 750, 900	1	Sold Separately	6
		HLP-22#-***-S25W				

Note: A shaft arrangement (L, R, T) will be indicated as # in the nomenclature. In addition, a reduction ratio will be indicated as ***.
Note: Please refer to page 302 for the performance table.

H Type Right Angle Shaft | Shaft Diameter 28 | Foot Mounting

<Figure 1>

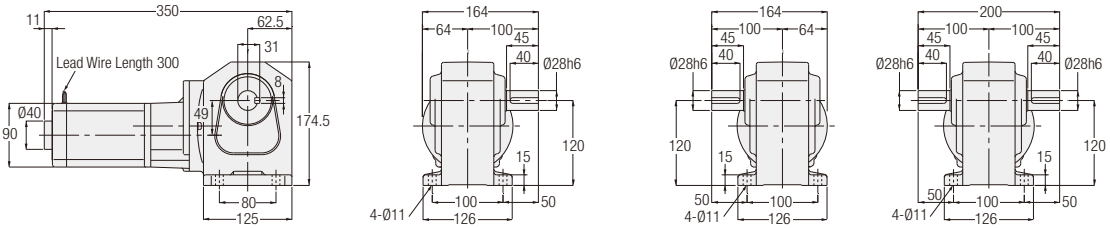

<Figure 2>

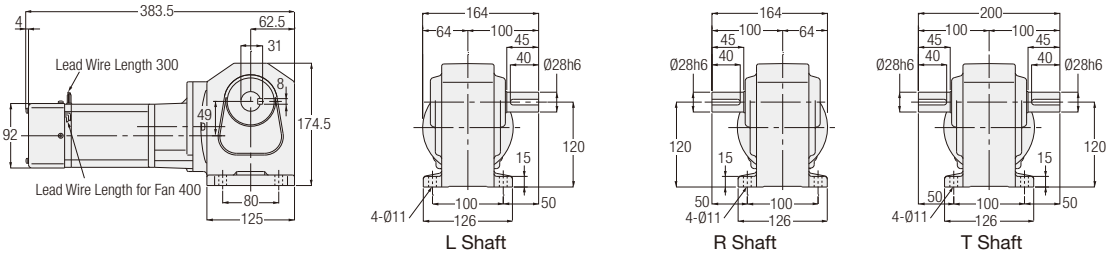

Number of Phases	Power	Part Number	Reduction Ratio	Figure Number	Controller	Approx. Weight (kg)
1-Phase	25 W	HLU-28#-***-S25	1200, 1500, 1800	1	Set	9
		HLU-28#-***-S25W				
		HLP-28#-***-S25	1200, 1500, 1800	1	Sold Separately	9
		HLP-28#-***-S25W				
	40 W	HLU-28#-***-S40	300, 375, 450, 600, 750, 900	1	Set	9
		HLU-28#-***-S40W				
		HLP-28#-***-S40	300, 375, 450, 600, 750, 900	1	Sold Separately	9
		HLP-28#-***-S40W				
	60 W	HLU-28#-***-S60	300, 375, 450, 600, 750, 900	2	Set	9
		HLU-28#-***-S60W				
		HLP-28#-***-S60	300, 375, 450, 600, 750, 900	2	Sold Separately	9
		HLP-28#-***-S60W				
	90 W	HLU-28#-***-S90	300, 375, 450	2	Set	9
		HLU-28#-***-S90W				
		HLP-28#-***-S90	300, 375, 450	2	Sold Separately	9
		HLP-28#-***-S90W				

Note: A shaft arrangement (L, R, T) will be indicated as # in the nomenclature. In addition, a reduction ratio will be indicated as ***.
Note: Please refer to page 302 for the performance table.

H Type Right Angle Shaft | Shaft Diameter **32** | **Foot** Mounting

<Figure 1>

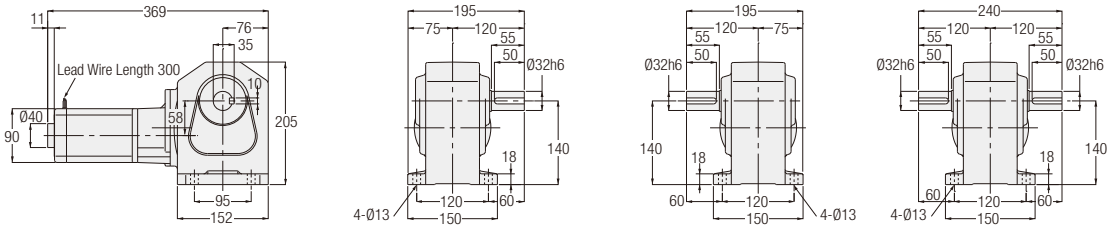

<Figure 2>

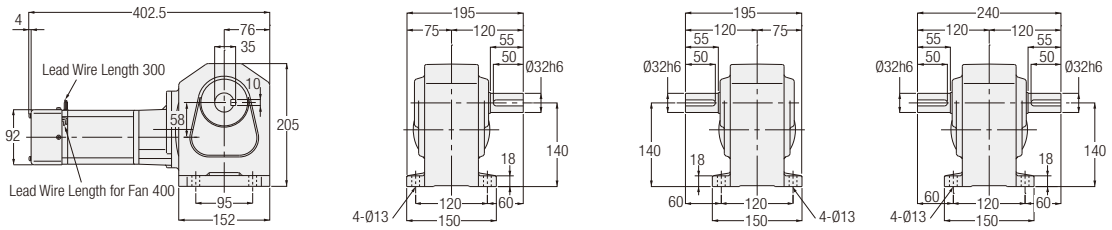

L Shaft | R Shaft | T Shaft

Number of Phases	Power	Part Number	Reduction Ratio	Figure Number	Controller	Approx. Weight (kg)
1-Phase	40 W	HLU-32#-***-S40	1200, 1500, 1800	1	Set	15
		HLU-32#-***-S40W				
		HLP-32#-***-S40	1200, 1500, 1800	1	Sold Separately	15
		HLP-32#-***-S40W				
	60 W	HLU-32#-***-S60	1200, 1500, 1800	2	Set	15
		HLU-32#-***-S60W				
		HLP-32#-***-S60	1200, 1500, 1800	2	Sold Separately	15
		HLP-32#-***-S60W				
	90 W	HLU-32#-***-S90	600, 750, 900	2	Set	15
		HLU-32#-***-S90W				
		HLP-32#-***-S90	600, 750, 900	2	Sold Separately	15
		HLP-32#-***-S90W				

Note: A shaft arrangement (L, R, T) will be indicated as # in the nomenclature. In addition, a reduction ratio will be indicated as ***.
Note: Please refer to page 303 for the performance table.

H Type Right Angle Shaft | Shaft Diameter 40 | Foot Mounting

<Figure 1>

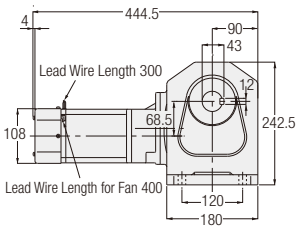

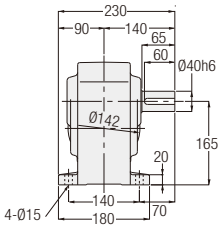

L Shaft

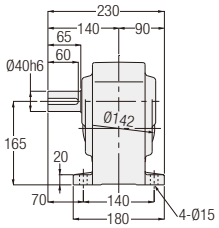

R Shaft

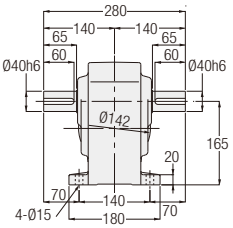

T Shaft

Number of Phases	Power	Part Number	Reduction Ratio	Figure Number	Controller	Approx. Weight (kg)
1-Phase	90 W	HLU-40#-✱✱✱-S90	1200, 1500, 1800	1	Set	22
		HLU-40#-✱✱✱-S90W				
		HLP-40#-✱✱✱-S90	1200, 1500, 1800	1	Sold Separately	22
		HLP-40#-✱✱✱-S90W				

Note: A shaft arrangement (L, R, T) will be indicated as # in the nomenclature. In addition, a reduction ratio will be indicated as ✱✱✱.
Note: Please refer to page 304 for the performance table.

H Type Right Angle Shaft | Shaft Diameter 15 | Flange Mounting

<Figure 2>

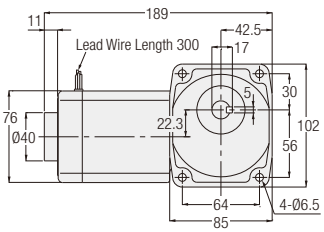

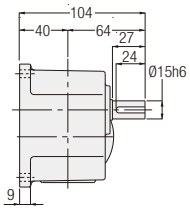

L Shaft

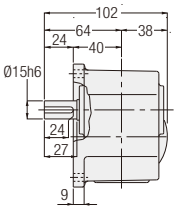

R Shaft

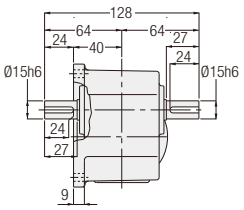

T Shaft

Number of Phases	Power	Part Number	Reduction Ratio	Figure Number	Controller	Approx. Weight (kg)
1-Phase	15 W	HFU-15#-✱✱✱-S15	10, 15, 20, 25, 30, 40, 50, 60, 80, 100, 120, 160, 200, 240	2	Set	3
		HFU-15#-✱✱✱-S15W				
		HFP-15#-✱✱✱-S15	10, 15, 20, 25, 30, 40, 50, 60, 80, 100, 120, 160, 200, 240	2	Sold Separately	3
		HFP-15#-✱✱✱-S15W				
	25 W	HFU-15#-✱✱✱-S25	10, 15, 20, 25, 30, 40, 50, 60, 80, 100, 120, 160, 200, 240	2	Set	3
		HFU-15#-✱✱✱-S25W				
		HFP-15#-✱✱✱-S25	10, 15, 20, 25, 30, 40, 50, 60, 80, 100, 120, 160, 200, 240	2	Sold Separately	3
		HFP-15#-✱✱✱-S25W				

Note: A shaft arrangement (L, R, T) will be indicated as # in the nomenclature. In addition, a reduction ratio will be indicated as ✱✱✱.
Note: Please refer to page 302 for the performance table.

H Type Right Angle Shaft | Shaft Diameter **18** | **Flange** Mounting

<Figure 1>

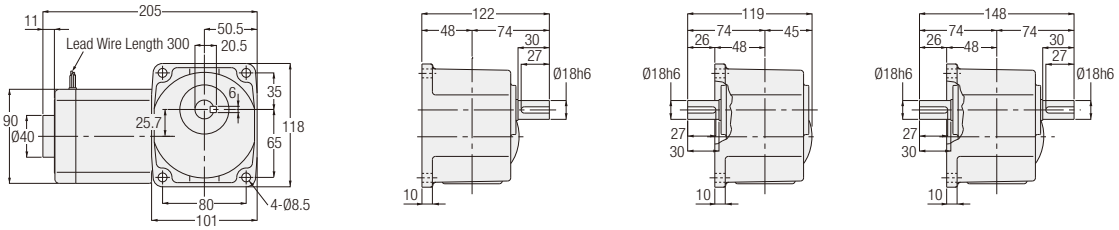

<Figure 2>

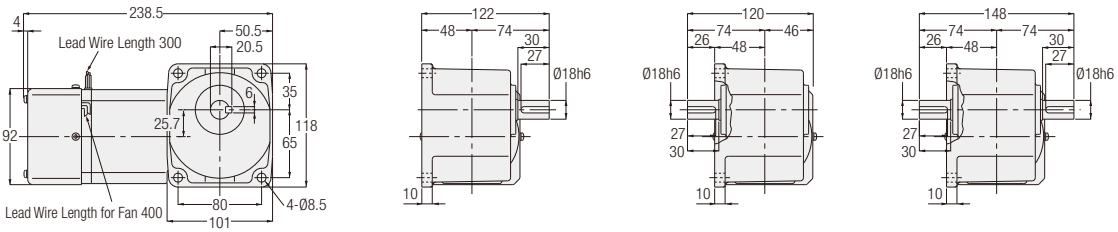

L Shaft R Shaft T Shaft

Number of Phases	Power	Part Number	Reduction Ratio	Figure Number	Controller	Approx. Weight (kg)
1-Phase	40 W	HFU-18#-***-S40	10, 15, 20, 25, 30, 40, 50, 60, 80, 100, 120, 160, 200, 240	1	Set	4
		HFU-18#-***-S40W				
		HFP-18#-***-S40	10, 15, 20, 25, 30, 40, 50, 60, 80, 100, 120, 160, 200, 240	1	Sold Separately	4
		HFP-18#-***-S40W				
	60 W	HFU-18#-***-S60	10, 15, 20, 25, 30, 40, 50, 60, 80, 100, 120, 160, 200, 240	2	Set	4
		HFU-18#-***-S60W				
		HFP-18#-***-S60	10, 15, 20, 25, 30, 40, 50, 60, 80, 100, 120, 160, 200, 240	2	Sold Separately	4
		HFP-18#-***-S60W				
	90 W	HFU-18#-***-S90	10, 15, 20, 25, 30, 40, 50, 60, 80, 100, 120, 160, 200, 240	2	Set	4
		HFU-18#-***-S90W				
		HFP-18#-***-S90	10, 15, 20, 25, 30, 40, 50, 60, 80, 100, 120, 160, 200, 240	2	Sold Separately	4
		HFP-18#-***-S90W				

Note: A shaft arrangement (L, R, T) will be indicated as # in the nomenclature. In addition, a reduction ratio will be indicated as ***.
Note: Please refer to page 303 for the performance table.

H Type Right Angle Shaft | Shaft Diameter 22 | Flange Mounting

<Figure 1>

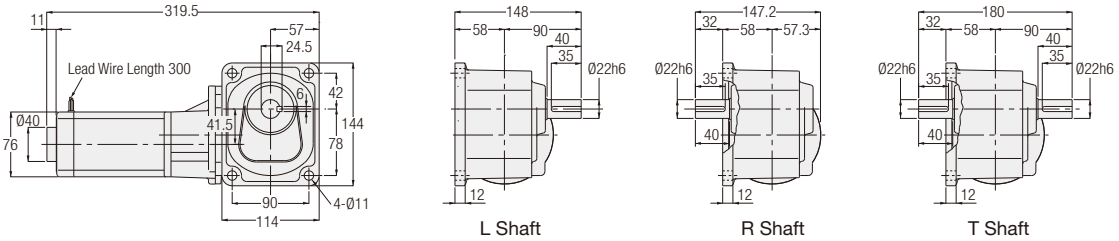

Number of Phases	Power	Part Number	Reduction Ratio	Figure Number	Controller	Approx. Weight (kg)
1-Phase	15 W	HFU-22#-***-S15	300, 375, 450, 600, 750, 900, 1200, 1500, 1800	1	Set	6
		HFU-22#-***-S15W				
		HFP-22#-***-S15	300, 375, 450, 600, 750, 900, 1200, 1500, 1800	1	Sold Separately	6
		HFP-22#-***-S15W				
	25 W	HFU-22#-***-S25	300, 375, 450, 600, 750, 900	1	Set	6
		HFU-22#-***-S25W				
		HFP-22#-***-S25	300, 375, 450, 600, 750, 900	1	Sold Separately	6
		HFP-22#-***-S25W				

Note: A shaft arrangement (L, R, T) will be indicated as # in the nomenclature. In addition, a reduction ratio will be indicated as ***.
Note: Please refer to page 302 for the performance table.

MEMO

5. Gearboxes (Double Shaft Type)

5-1. Performance Table

H2 Type Gearboxes (Double Shaft Type)

[Notes]
- The motor power class value is the value when a 4 pole motor is used.
- Allowable output shaft O.H.L. is the value at 20 mm from the end of the output shaft.
- For the rotational direction of the output shaft, please refer to the figure shown below.
- The "*" mark indicates a limited torque type. Please make sure to check the allowable output shaft torque in the performance table.

■ Rotational Direction Relationship

The rotational direction shown below with arrow illustrates the rotation relationship between the output shaft / input shaft and is no way illustrating limitations in rotational direction.

Power	Reduction Ratio
0.2 kW	1/5 to 1/60 and 1/600 to 1/1500
0.4 kW,0.75 kW	1/5 to 1/60 and 1/300 to 1/1500
1.5 kW,2.2 kW	1/5 to 1/30

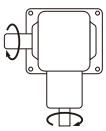
L Shaft

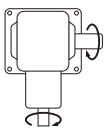
R Shaft

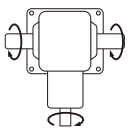
T Shaft

Power	Reduction Ratio
0.2 kW	1/80 to 1/450
0.4 kW,0.75 kW	1/80 to 1/240
1.5 kW,2.2 kW	1/40 to 1/240

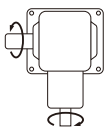
L Shaft

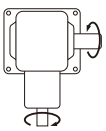
R Shaft

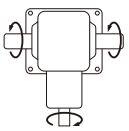
T Shaft

4 Poles Motor Power Class	Frame Size	Reduction Ratio	Actual Reduction Ratio	Allowable Output Shaft Torque Input (1500 r/min)	Allowable O.H.L.		Drawings	
					N		Foot Mount	Flange Mount
				N·m	Input Shaft	Output Shaft		
0.2 kW	22	1/5	1/5	5.7	245	588	P.317	P.320
		1/10	1/10	12		931		
		1/15	1/15	18		1030		
		1/20	1/20	23		1180		
		1/25	1/25	28		1270		
		1/30	1/30	34		1370		
		1/40	1/40	46		1570		
		1/50	1/50	57		1720		
		1/60	1/59	69		1810		
	28	1/80	1/80	88	245	2450	P.317	-
		1/100	1/100	111		2650		
		1/120	1/120	133		2740		
		1/160	1/160	177		2840		
		1/200	1/200	221		2840		
		1/240	1/236	245		2840		
	32	1/300	7/2120	294	245	3820	P.318	-
		1/375	7/2650	368		4120		
		1/450	7/3127	431		4120		
	40	1/600	7/4240	588	245	6760	P.319	-
		1/750	7/5300	735		6760		
		1/900	7/6360	764		6760		
		* 1/1200	7/8480	764		6760		
		* 1/1500	7/10600	764		6760		

4 Poles Motor Power Class	Frame Size	Reduction Ratio	Actual Reduction Ratio	Allowable Output Shaft Torque Input (1500 r/min)	Allowable O.H.L.		Drawings
					N		Foot Mount
				N·m	Input Shaft	Output Shaft	
0.4 kW	28	1/5	1/5	12	294	931	P.317
		1/10	1/10	23		1470	
		1/15	1/15	34		1670	
		1/20	1/20	46		1860	
		1/25	1/25	57		2010	
		1/30	1/30	69		2210	
		1/40	1/40	92		2450	
		1/50	1/50	115		2650	
		1/60	1/59	137		2740	
	32	1/80	1/80	177	294	3430	P.318
		1/100	1/100	221		3820	
		1/120	1/120	266		4120	
		1/160	1/160	355		4120	
		1/200	1/200	431		4120	
		* 1/240	1/236	431		4120	
	40	1/300	7/2080	572	294	6760	P.319
		1/375	7/2600	715		6760	
		* 1/450	7/3120	764		6760	
	50	1/600	21/12220	1150	294	9510	P.320
		* 1/750	1/728	1230		9510	
		* 1/900	7/6240	1230		9510	
		* 1/1200	21/24440	1230		9510	
		* 1/1500	1/1456	1230		9510	
0.75 kW	32	1/5	1/5	22	392	1520	P.318
		1/10	1/10	43		2010	
		1/15	1/15	65		2210	
		1/20	1/20	86		2450	
		1/25	1/25	108		2740	
		1/30	1/30	128		2940	
		1/40	1/40	172		3430	
		1/50	1/50	215		3820	
		1/60	1/59	258		4120	
	40	1/80	1/80	332	392	5780	P.319
		1/100	1/100	416		6080	
		1/120	1/120	498		6270	
		1/160	1/160	664		6470	
		* 1/200	1/200	764		6660	
		* 1/240	1/240	764		6660	
	50	1/300	7/2120	1070	392	7740	P.320
		* 1/375	7/2650	1230		8040	
		* 1/450	7/3180	1230		8530	
1.5 kW	40	1/5	1/5	43	392	2650	P.319
		1/10	1/10	86		3530	
		1/15	1/15	128		4410	
		1/20	1/20	172		4700	
		1/25	1/25	215		5100	
		1/30	1/30	258		5290	
		1/40	1/40	344		5590	
		1/50	1/50	429		5880	
		1/60	1/60	515		6080	
	50	1/80	3/235	664	392	8530	P.320
		1/100	1/98	830		8820	
		1/120	1/120	1000		9020	
		* 1/160	3/470	1230		9310	
		* 1/200	1/196	1230		9510	
		* 1/240	1/240	1230		9510	

4 Poles Motor Power Class	Frame Size	Reduction Ratio	Actual Reduction Ratio	Allowable Output Shaft Torque Input (1500 r/min)	Allowable O.H.L.		Drawings
					N		Foot Mount
				N·m	Input Shaft	Output Shaft	
2.2 kW	50	1/5	1/5	63	392	3920	P.320
		1/10	1/10	126		4410	
		1/15	1/15	189		4900	
		1/20	12/235	252		5490	
		1/25	2/49	315		6080	
		1/30	1/30	378		6570	
		1/40	1/40	487		7060	
		1/50	1/50	609		7550	
		1/60	1/60	731		8130	
		1/80	3/235	974		8430	
		1/100	1/98	1220		8820	
		* 1/120	1/120	1230		8820	

Note 1: Please be sure to read the notes on page 314.

5-2. Drawings

H2 Type Right Angle Shaft | Shaft Diameter **22** | **Foot** Mounting

<Figure 1>

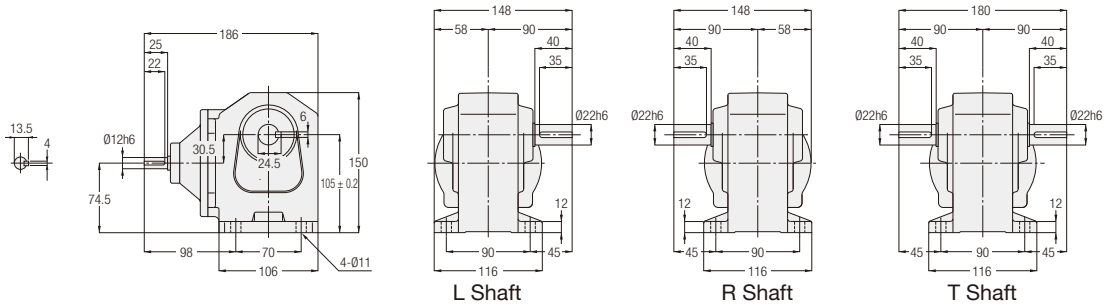

Power Class	Part Number	Reduction Ratio	Figure Number	Approx. Weight (kg)
0.2 kW	H2L-22#-***-020	5, 10, 15, 20, 25, 30, 40, 50, 60	1	3.5

Note: A shaft arrangement (L, R, T) will be indicated as # in the nomenclature. In addition, a reduction ratio will be indicated as ***.
Note: Please refer to page 314 for the performance table.

H2 Type Right Angle Shaft | Shaft Diameter **28** | **Foot** Mounting

<Figure 2>

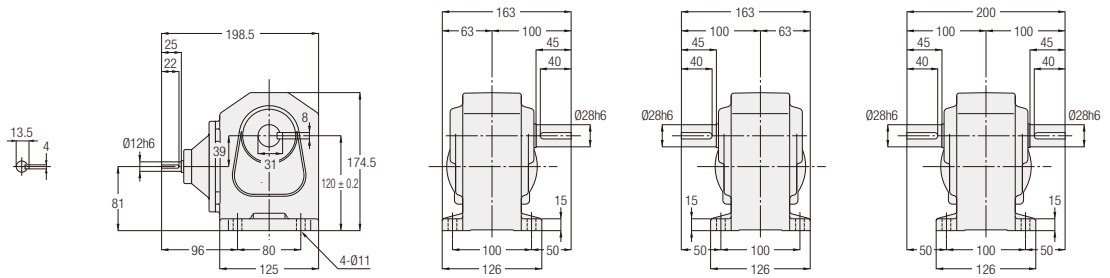

<Figure 3>

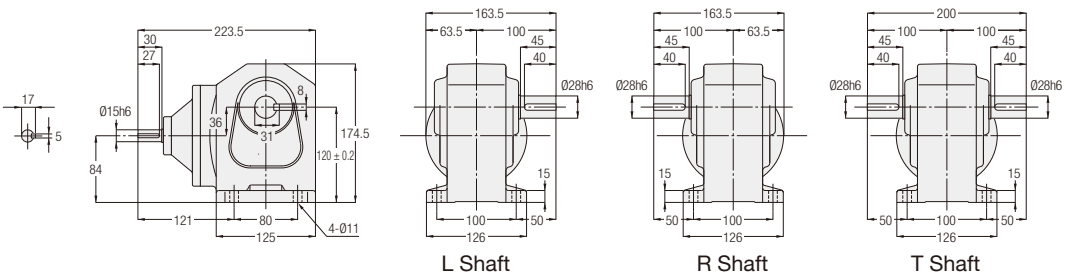

Power Class	Part Number	Reduction Ratio	Figure Number	Approx. Weight (kg)
0.2 kW	H2L-28#-***-020	80, 100, 120, 160, 200, 240	2	5.5
0.4 kW	H2L-28#-***-040	5, 10, 15, 20, 25, 30, 40, 50, 60	3	5.5

Note: A shaft arrangement (L, R, T) will be indicated as # in the nomenclature. In addition, a reduction ratio will be indicated as ***.
Note: Please refer to page 314 for the performance table.

H2 Type Right Angle Shaft | Shaft Diameter 32 | Foot Mounting

<Figure 1>

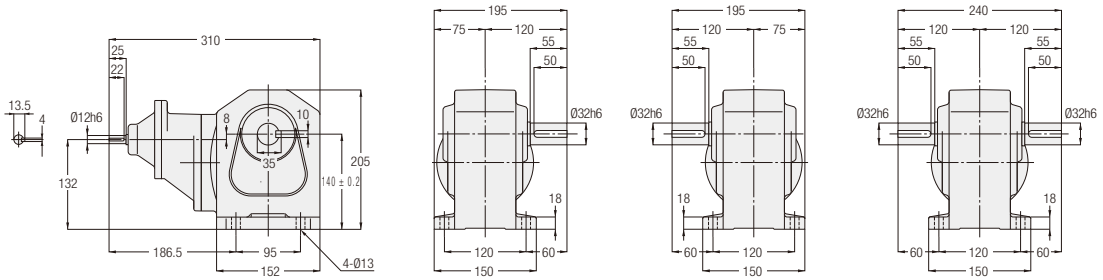

<Figure 2>

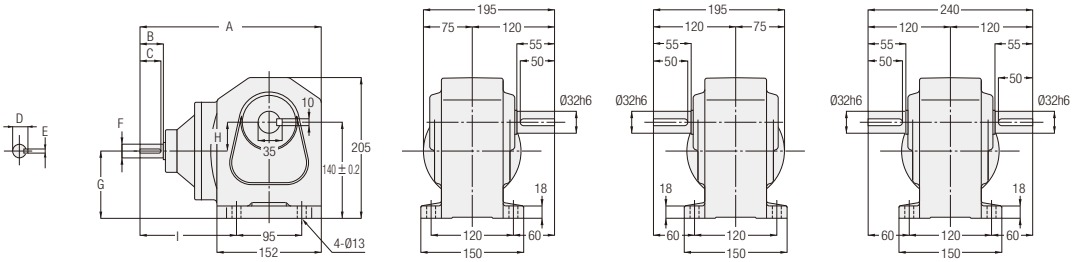

Power Class	Part Number	Reduction Ratio	Figure Number	Approx. Weight (kg)	A	B	C	D	E	F	G	H	I
0.2 kW	H2L-32#-***-020	300, 375, 450	1	9.5	-	-	-	-	-	-	-	-	-
0.4 kW	H2L-32#-***-040	80, 100, 120, 160, 200, 240	2	8.5	242.5	30	27	17	5	Ø15h6	95	45	119
0.75 kW	H2L-32#-***-075	5, 10, 15, 20, 25, 30, 40, 50, 60	2	8.5	264	35	32	22.5	6	Ø20h6	98	42	140.5

Note: A shaft arrangement (L, R, T) will be indicated as # in the nomenclature. In addition, a reduction ratio will be indicated as ***.
Note: Please refer to page 314 for the performance table.

H2 Type Right Angle Shaft | Shaft Diameter **40** | **Foot** Mounting

<Figure 1>

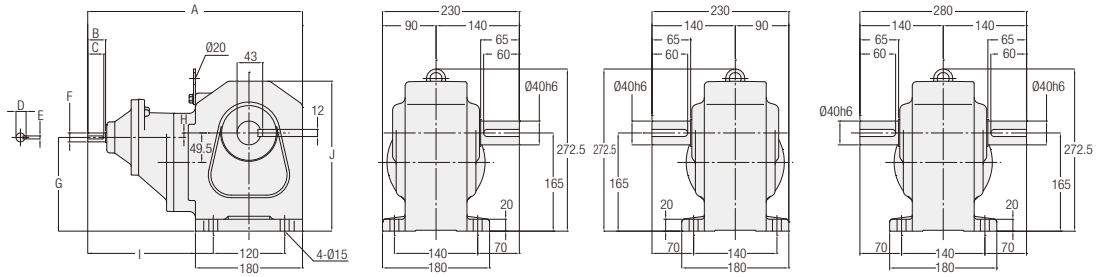

<Figure 2>

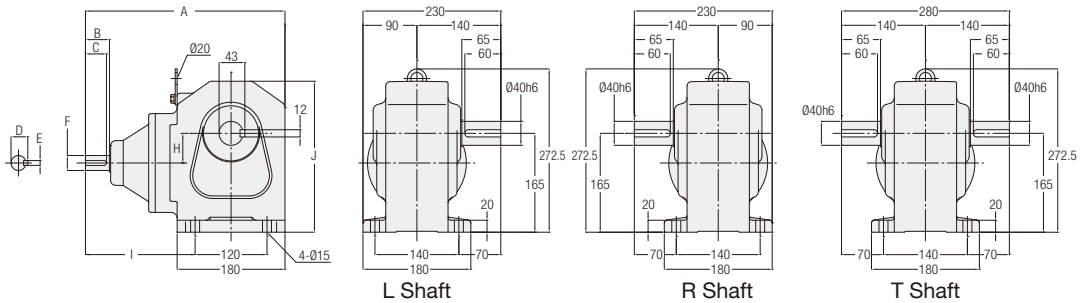

L Shaft R Shaft T Shaft

Power Class	Part Number	Reduction Ratio	Figure Number	Approx. Weight (kg)	A	B	C	D	E	F	G	H	I	J
0.2 kW	H2L-40#-***-020	600, 750, 900, 1200, 1500	1	18	328.5	25	22	13.5	4	Ø12h6	145.5	19.5	178.5	242.5
0.4 kW	H2L-40#-***-040	300, 375, 450	1	19	361	30	27	17	5	Ø15h6	157.5	7.5	211	252
0.75 kW	H2L-40#-***-075	80, 100, 120, 160, 200, 240	2	17	282.5	35	32	22.5	6	Ø20h6	-	53.5	132.5	242.5
1.5 kW	H2L-40#-***-150	5, 10, 15, 20, 25, 30, 40, 50, 60	2	17.5	333	40	35	28	8	Ø25h6	-	49.5	183	252

Note: A shaft arrangement (L, R, T) will be indicated as # in the nomenclature. In addition, a reduction ratio will be indicated as ***.
Note: Please refer to page 314 for the performance table.

H2 Type Right Angle Shaft | Shaft Diameter 50 | Foot Mounting

<Figure 1>

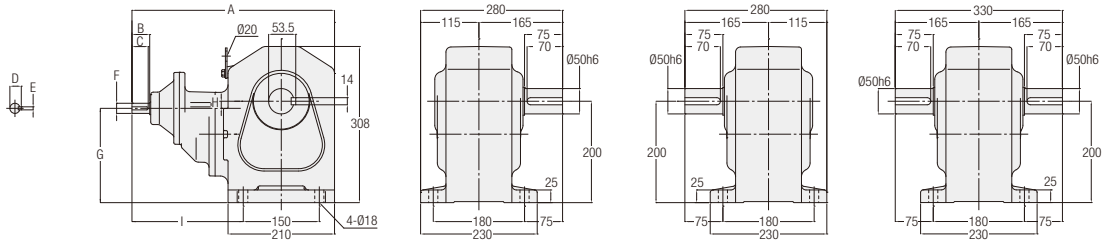

<Figure 2>

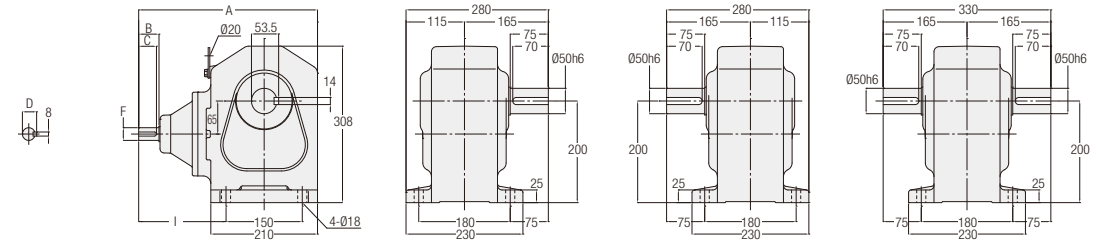

L Shaft R Shaft T Shaft

Power Class	Part Number	Reduction Ratio	Figure Number	Approx. Weight (kg)	A	B	C	D	E	F	G	H	I
0.4 kW	H2L-50#-***-040	600, 750, 900, 1200, 1500	1	48.5	380	30	27	17	5	Ø15h6	177	23	200
0.75 kW	H2L-50#-***-075	300, 375, 450	1	49.5	399.5	35	32	22.5	6	Ø20h6	186	14	219.5
1.5 kW	H2L-50#-***-150	80, 100, 120, 160, 200, 240	2	47.5	352	40	35	28	-	Ø25h6	-	-	172
2.2 kW	H2L-50#-***-220	5, 10, 15, 20, 25, 30, 40, 50, 60	2	47	364	45	40	33	-	Ø30h6	-	-	184

Note: A shaft arrangement (L, R, T) will be indicated as # in the nomenclature. In addition, a reduction ratio will be indicated as ***.
Note: Please refer to page 315 for the performance table.

H2 Type Right Angle Shaft | Shaft Diameter 22 | Flange Mounting

<Figure 1>

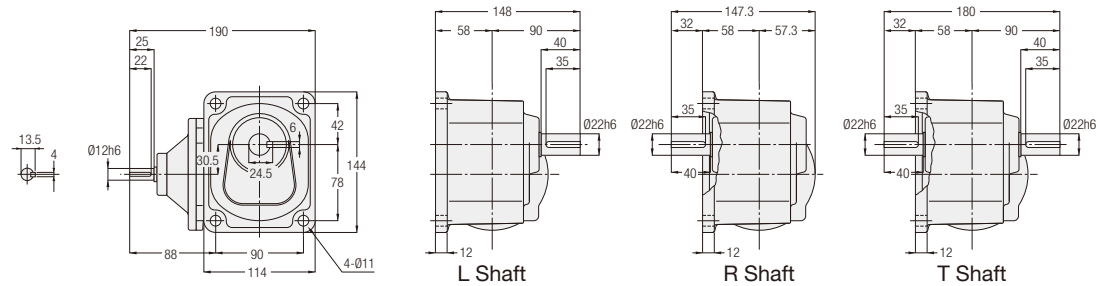

L Shaft R Shaft T Shaft

Power Class	Part Number	Reduction Ratio	Figure Number	Approx. Weight (kg)
0.2 kW	H2F-22#-***-020	5, 10, 15, 20, 25, 30, 40, 50, 60	1	3.5

Note: A shaft arrangement (L, R, T) will be indicated as # in the nomenclature. In addition, a reduction ratio will be indicated as ***.
Note: Please refer to page 314 for the performance table.

MEMO

6. S-Type Gearboxes (Type That Can Be Equipped with Designated Motor)

6-1. Performance Table

H2 Type S-Type Gearboxes (Type which Can be Equipped with Designated Motor)

[Notes]
- The value of the allowable output shaft torque is the value when a 4 pole motor is used.
- When using an output shaft for a motor other than a 4 pole motor, the value obtained by multiplying the torque by the torque correction coefficient shown on page 626 shall be the allowable output shaft torque at the rotation.
- Allowable output shaft O.H.L. is the value at 20 mm from the end of the output shaft.
- For the rotational direction of the output shaft, please refer to the figure shown below.
- The "*" mark indicates a limited torque type. Please make sure to check the allowable output shaft torque in the performance table.

■ Rotational Direction Relationship

The rotational direction shown below with arrow illustrates the rotation relationship between the output shaft / input shaft and is no way illustrating limitations in rotational direction.

Power	Reduction Ratio
0.2 kW	1/5 to 1/60 and 1/600 to 1/1500
0.4 kW,0.75 kW	1/5 to 1/60 and 1/300 to 1/1500
1.5 kW,2.2 kW	1/5 to 1/30

Power	Reduction Ratio
0.2 kW	1/80 to 1/450
0.4 kW,0.75 kW	1/80 to 1/240
1.5 kW,2.2 kW	1/40 to 1/240

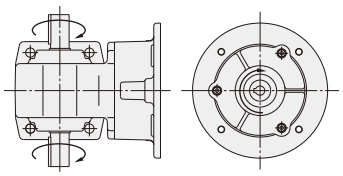

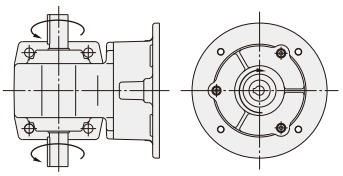

4 Poles Motor Power Class	Frame Size	Reduction Ratio	Actual Reduction Ratio	Allowable Output Shaft Torque N·m		Allowable Output Shaft O.H.L.	Drawings	
				50 Hz	60 Hz	N	Foot Mount	Flange Mount
0.2 kW	22	1/5	1/5	5.7	4.8	588	P.325	P.329
		1/10	1/10	12	9.5	931		
		1/15	1/15	18	15	1030		
		1/20	1/20	23	19	1180		
		1/25	1/25	28	24	1270		
		1/30	1/30	34	28	1370		
		1/40	1/40	46	38	1570		
		1/50	1/50	57	48	1720		
		1/60	1/59	69	57	1810		
	28	1/80	1/80	88	74	2450	P.325	-
		1/100	1/100	111	92	2650		
		1/120	1/120	133	111	2740		
		1/160	1/160	177	148	2840		
		1/200	1/200	221	184	2840		
		1/240	1/236	245	221	2840		
	32	1/300	7/2120	294	245	3820	P.326	-
		1/375	7/2650	368	306	4120		
		1/450	7/3127	431	368	4120		
	40	1/600	7/4240	588	490	6760	P.327	-
		1/750	7/5300	735	613	6760		
		1/900	7/6360	764	735	6760		
		* 1/1200	7/8480	764	764	6760		
		* 1/1500	7/10600	764	764	6760		

4 Poles Motor Power Class	Frame Size	Reduction Ratio	Actual Reduction Ratio	Allowable Output Shaft Torque N·m		Allowable Output Shaft O.H.L.	Drawings
				50 Hz	60 Hz	N	Foot Mount
0.4 kW	28	1/5	1/5	12	9.5	931	P.325
		1/10	1/10	23	19	1470	
		1/15	1/15	34	28	1670	
		1/20	1/20	46	38	1860	
		1/25	1/25	57	48	2010	
		1/30	1/30	69	57	2210	
		1/40	1/40	92	76	2450	
		1/50	1/50	115	95	2650	
		1/60	1/59	137	115	2740	
	32	1/80	1/80	177	148	3430	P.326
		1/100	1/100	221	184	3820	
		1/120	1/120	266	221	4120	
		1/160	1/160	355	295	4120	
		1/200	1/200	431	369	4120	
		* 1/240	1/236	431	431	4120	
	40	1/300	7/2080	572	477	6760	P.327
		1/375	7/2600	715	597	6760	
		* 1/450	7/3120	764	715	6760	
	50	1/600	21/12220	1150	955	9510	P.328
		* 1/750	1/728	1230	1190	9510	
		* 1/900	7/6240	1230	1230	9510	
		* 1/1200	21/24440	1230	1230	9510	
		* 1/1500	1/1456	1230	1230	9510	
0.75 kW	32	1/5	1/5	22	18	1520	P.326
		1/10	1/10	43	36	2010	
		1/15	1/15	65	54	2210	
		1/20	1/20	86	72	2450	
		1/25	1/25	108	89	2740	
		1/30	1/30	128	107	2940	
		1/40	1/40	172	143	3430	
		1/50	1/50	215	179	3820	
		1/60	1/59	258	215	4120	
	40	1/80	1/80	332	277	5780	P.327
		1/100	1/100	416	346	6080	
		1/120	1/120	498	415	6270	
		1/160	1/160	664	554	6470	
		* 1/200	1/200	764	692	6660	
		* 1/240	1/240	764	764	6660	
	50	1/300	7/2120	1070	895	7740	P.328
		* 1/375	7/2650	1230	1120	8040	
		* 1/450	7/3180	1230	1230	8530	
1.5 kW	40	1/5	1/5	43	36	2650	P.327
		1/10	1/10	86	72	3530	
		1/15	1/15	128	107	4410	
		1/20	1/20	172	143	4700	
		1/25	1/25	215	179	5100	
		1/30	1/30	258	215	5290	
		1/40	1/40	344	277	5590	
		1/50	1/50	429	346	5880	
		1/60	1/60	515	415	6080	
	50	1/80	3/235	664	554	8530	P.328
		1/100	1/98	830	692	8820	
		1/120	1/120	1000	830	9020	
		* 1/160	3/470	1230	1110	9310	
		* 1/200	1/196	1230	1230	9510	
		* 1/240	1/240	1230	1230	9510	

4 Poles Motor Power Class	Frame Size	Reduction Ratio	Actual Reduction Ratio	Allowable Output Shaft Torque N·m		Allowable Output Shaft O.H.L.	Drawings
				50 Hz	60 Hz	N	Foot Mount
2.2 kW	50	1/5	1/5	63	53	3920	P.328
		1/10	1/10	126	105	4410	
		1/15	1/15	189	157	4900	
		1/20	12/235	252	210	5490	
		1/25	2/49	315	263	6080	
		1/30	1/30	378	315	6570	
		1/40	1/40	487	406	7060	
		1/50	1/50	609	507	7550	
		1/60	1/60	731	609	8130	
		1/80	3/235	974	812	8430	
		1/100	1/98	1220	1010	8820	
		* 1/120	1/120	1230	1220	8820	

Note 1: Please be sure to read the notes on page 322.

6-2. Drawings

H2 Type Right Angle Shaft | Shaft Diameter **22** | **Foot** Mounting

<Figure 1>

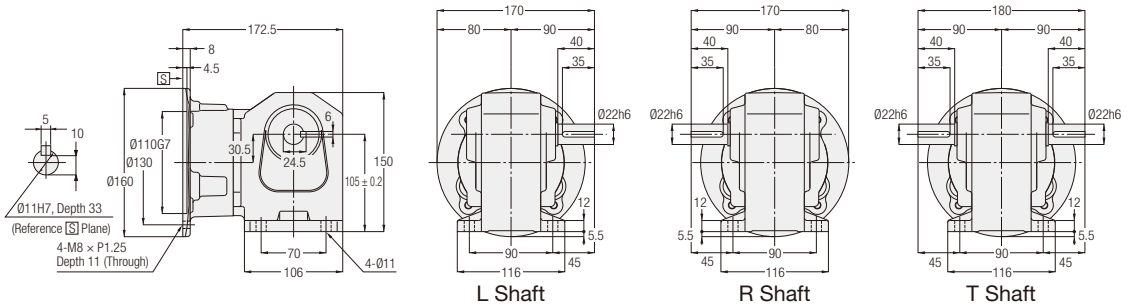

Power Class	Part Number	Reduction Ratio	Figure Number	Approx. Weight (kg)
0.2 kW	H2LS-22#-***-020	5, 10, 15, 20, 25, 30, 40, 50, 60	1	4.5

Note: A shaft arrangement (L, R, T) will be indicated as # in the nomenclature. In addition, a reduction ratio will be indicated as ***.
Note: Please refer to page 322 for the performance table.
Note: Please refer to page 629 for the details of the motor mounting area.

H2 Type Right Angle Shaft | Shaft Diameter **28** | **Foot** Mounting

<Figure 2>

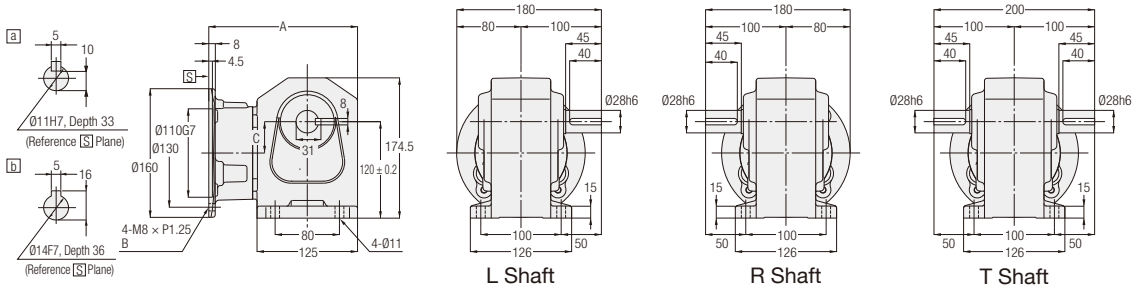

Power Class	Part Number	Reduction Ratio	Figure Number	Approx. Weight (kg)	Input Shaft	A	B	C
0.2 kW	H2LS-28#-***-020	80, 100, 120, 160, 200, 240	2	6.5	a	185	Depth 11 (Through)	39
0.4 kW	H2LS-28#-***-040	5, 10, 15, 20, 25, 30, 40, 50, 60	2	6.5	b	201	Depth 20	36

Note: A shaft arrangement (L, R, T) will be indicated as # in the nomenclature. In addition, a reduction ratio will be indicated as ***.
Note: Please refer to page 322 for the performance table.
Note: Please refer to page 629 for the details of the motor mounting area.

H2 Type Right Angle Shaft | Shaft Diameter 32 | Foot Mounting

<Figure 1>

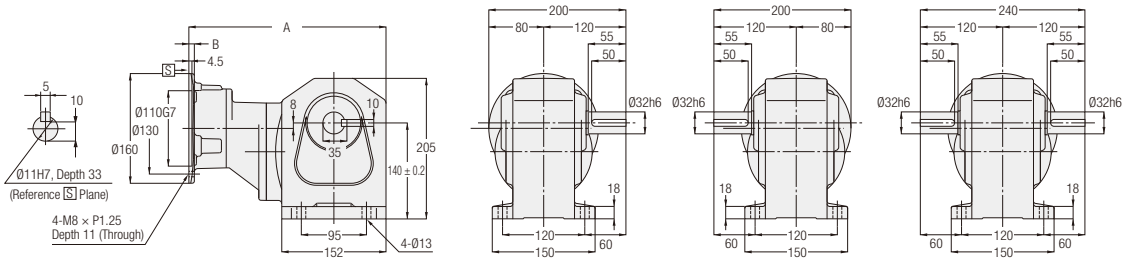

<Figure 2>

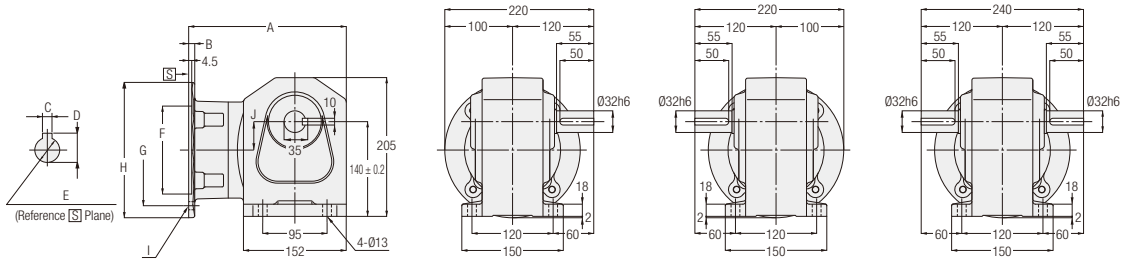

L Shaft R Shaft T Shaft

Power Class	Part Number	Reduction Ratio	Figure Number	Approx. Weight (kg)	A	B	C	D	E	F	G	H	I	J
0.2 kW	H2LS-32#-***-020	300, 375, 450	1	10.5	287.5	8	-	-	-	-	-	-	-	-
0.4 kW	H2LS-32#-***-040	80, 100, 120, 160, 200, 240	2	9.5	220	8	5	16	Ø14F7, Depth 36	Ø110G7	Ø130	Ø160	4-M8×P1.25, Depth 20	45
0.75 kW	H2LS-32#-***-075	5, 10, 15, 20, 25, 30, 40, 50, 60	2	9	233	9	6	21.5	Ø19F7, Depth 42	Ø130G7	Ø165	Ø200	4-M10×P1.5, Depth 23 (Through)	42

Note: A shaft arrangement (L, R, T) will be indicated as # in the nomenclature. In addition, a reduction ratio will be indicated as ***.
Note: Please refer to page 322 for the performance table.
Note: Please refer to page 629 for the details of the motor mounting area.

H2 Type Right Angle Shaft | Shaft Diameter **40** | **Foot** Mounting

<Figure 1>

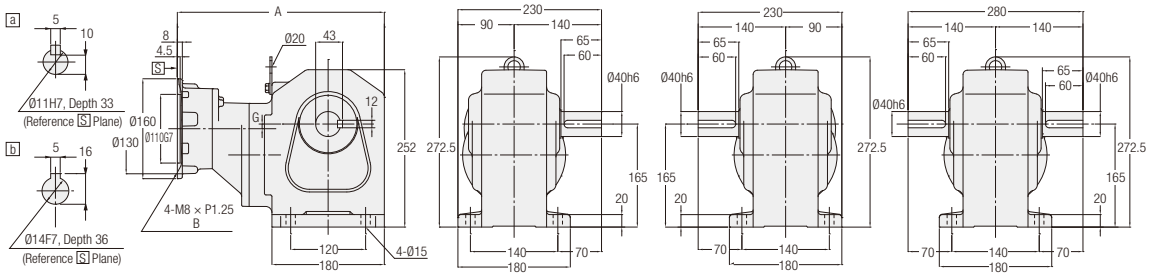

<Figure 2>

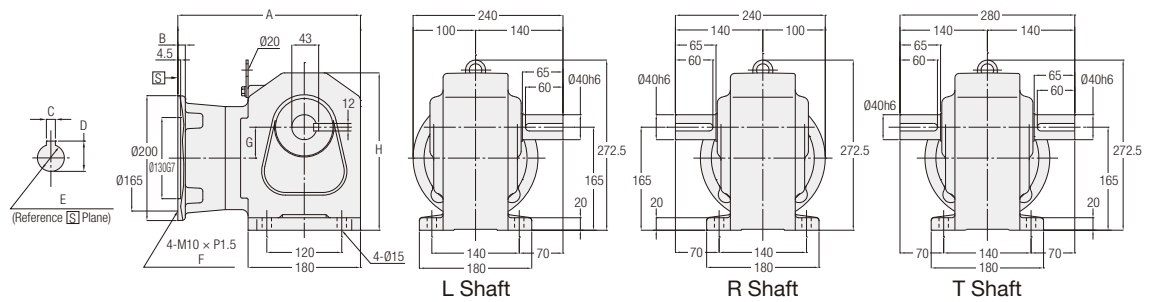

Power Class	Part Number	Reduction Ratio	Figure Number	Approx. Weight (kg)	Input Shaft	A	B	C	D	E	F	G	H
0.2 kW	H2LS-40#-***-020	600, 750, 900, 1200, 1500	1	19	a	306	Depth 11 (Through)	-	-	-	-	19.5	-
0.4 kW	H2LS-40#-***-040	300, 375, 450	1	20	b	331.5	Depth 20	-	-	-	-	7.5	-
0.75 kW	H2LS-40#-***-075	80, 100, 120, 160, 200, 240	2	17.5	-	251.5	9	6	21.5	Ø19F7, Depth 42	Depth 23 (Through)	53.5	242.5
1.5 kW	H2LS-40#-***-150	5, 10, 15, 20, 25, 30, 40, 50, 60	2	19.5	-	292.5	12	8	27	Ø24F7, Depth 52	25	49.5	252

Note: A shaft arrangement (L, R, T) will be indicated as # in the nomenclature. In addition, a reduction ratio will be indicated as ***.
Note: Please refer to page 322 for the performance table.
Note: Please refer to page 629 for the details of the motor mounting area.

H2 Type Right Angle Shaft | Shaft Diameter 50 | Foot Mounting

<Figure 1>

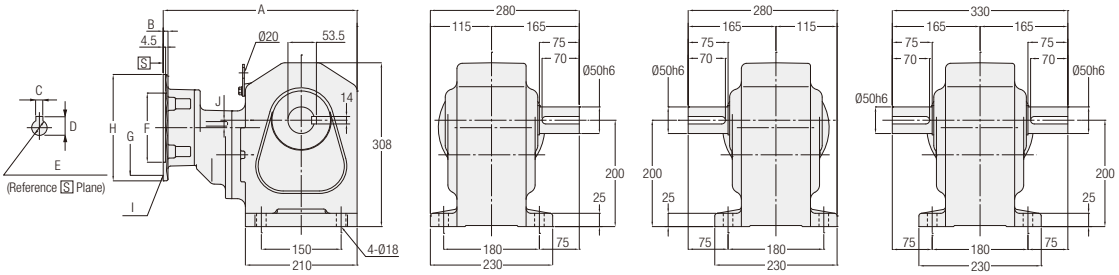

<Figure 2>

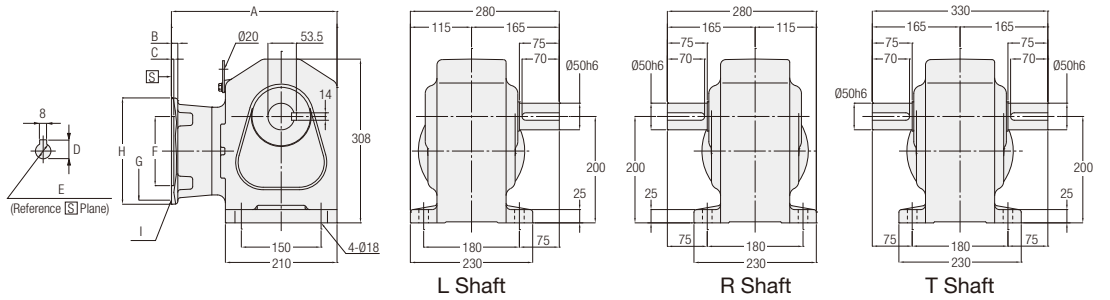

L Shaft R Shaft T Shaft

Power Class	Part Number	Reduction Ratio	Figure Number	Approx. Weight (kg)	A	B	C	D	E	F	G	H	I	J
0.4 kW	H2LS-50#-***-040	600, 750, 900, 1200, 1500	1	49.5	350.5	8	5	16	Ø14F7, Depth 36	Ø110G7	Ø130	Ø160	4-M8×P1.25, Depth 20	23
0.75 kW	H2LS-50#-***-075	300, 375, 450	1	50.5	364.5	9	6	21.5	Ø19F7, Depth 42	Ø130G7	Ø165	Ø200	4-M10×P1.5, Depth 23 (Through)	14
1.5 kW	H2LS-50#-***-150	80, 100, 120, 160, 200, 240	2	49	311.5	12	4.5	27	Ø24F7, Depth 52	Ø130G7	Ø165	Ø200	4-M10×P1.5, Depth 25	-
2.2 kW	H2LS-50#-***-220	5, 10, 15, 20, 25, 30, 40, 50, 60	2	49.5	324	16	5	31	Ø28F7, Depth 62	Ø180G7	Ø215	Ø250	4-M12×P1.75, Depth 16	-

Note: A shaft arrangement (L, R, T) will be indicated as # in the nomenclature. In addition, a reduction ratio will be indicated as ***.
Note: Please refer to page 323 for the performance table.
Note: Please refer to page 629 for the details of the motor mounting area.

H2 Type Right Angle Shaft | Shaft Diameter **22** | **Flange** Mounting

<Figure 1>

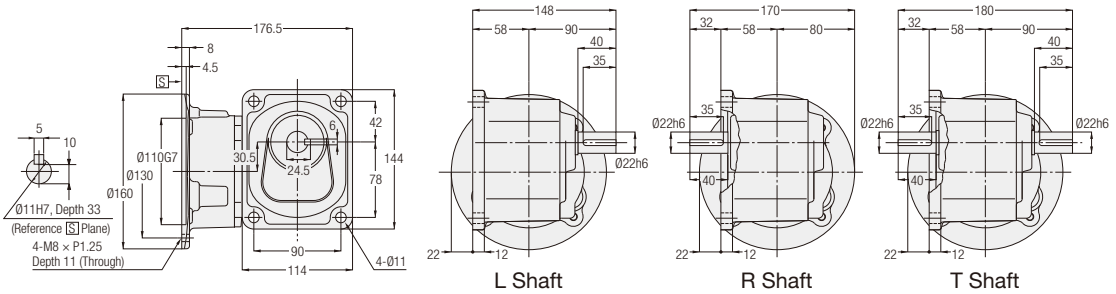

Power Class	Part Number	Reduction Ratio	Figure Number	Approx. Weight (kg)
0.2 kW	H2FS-22#-***-020	5, 10, 15, 20, 25, 30, 40, 50, 60	1	4.5

Note: A shaft arrangement (L, R, T) will be indicated as # in the nomenclature. In addition, a reduction ratio will be indicated as ***.
Note: Please refer to page 322 for the performance table.
Note: Please refer to page 629 for the details of the motor mounting area.

MEMO

F/FA Type

Right Angle Hollow Bore/ Right Angle Shaft

Standard Specification
Model and Type Codes
Standard Model Lineup

INDUCTION GEARMOTORS

P.360 **1. Gearmotors/Gearmotors with Brake**
- **1-1. Motor Characteristics Table**
- **1-2. Performance Table**
- **1-3. Drawings**

P.390 **2. IP65 Gearmotors/ IP65 Gearmotors with Brake**
- **2-1. Motor Characteristics Table**
- **2-2. Performance Table**
- **2-3. Drawings**

P.404 **3. Gearboxes (Double Shaft Type)**
- **3-1. Performance Table**
- **3-2. Drawings**

P.412 **4. S-Type Gearboxes (Type Which Can Be Equipped with Designated Motor)**
- **4-1. Performance Table**
- **4-2. Drawings**



Standard Specification

F Type Gearmotors/Gearmotors with Brake <Right Angle Hollow Bore/FS, Right Angle Shaft/FF>

Series		MID				
Motor Unit	Number of Phases	3-Phase				1-Phase (Note 4)
	Power	0.1 kW to 2.2 kW				0.1 kW to 0.4 kW
	Power Supply	Type	Global Standards Correspondence	Power Supply/Frequency		Standard Voltage 100 V/50 Hz, 100 V/60 Hz High Voltage (200 V Class) 200 V/50 Hz, 200 V/60 Hz
		Standard Voltage	UL/CE/CCC	200 V/50 Hz, 200 V/60 Hz, 220 V/60 Hz		
		High Voltage (400 V Class)	UL/CE/CCC	380 V/50 Hz, 400 V/50 Hz, 400 V/60 Hz, 440 V/60 Hz		
		Special Voltage	South Korea/ Taiwan UL/CE/CCC	220 V/60 Hz, 380 V/60 Hz (Dual Voltage)		
			China UL/CE/CCC	220 V/50 Hz, 230 V/50 Hz, 380 V/50 Hz (Dual Voltage)		
			China/South Korea/Taiwan UL/CE/CCC	220 V/50 Hz, 220 V/60 Hz, 380 V/50 Hz, 380 V/60 Hz (Dual Voltage) (Note 1)		
			Europe/North America UL/cUL/CE/CCC	415 V/50 Hz, 440 V/50 Hz, 480 V/60 Hz		
			North America/ Europe UL/cUL/CE/CCC	230 V/60 Hz, 460 V/60 Hz, 400 V/50 Hz (Dual Voltage) (Note 2)		
			North America/ Europe UL/cUL/CE/CCC	208 V/60 Hz, 230 V/60 Hz, 460 V/60 Hz, 400 V/50 Hz (Note 3)		
			Canada UL/cUL	575 V/60 Hz		
	Insulation Class	Ins. F				Ins. B
	Startup Method	Direct Power Input				Capacitor Start (0.1 kW: Capacitor Run)
	Cooling Method	Totally Enclosed Fan Cooled (TEFC) (IC411) (All of 0.1 kW and 0.2 kW models without brake are totally enclosed non-ventilated (TENV) (IC410))				Totally Enclosed Fan Cooled (TEFC) (IC411)
	Number of Motor Poles	4				
	Rating	Power	Motor Efficiency	UL/CE Standard	CCC Standard	Continuous
		0.1 kW	IE1	Continuous	Continuous	
		0.2 kW, 0.4 kW (Note 5)	IE2	Continuous	Short Time (120 minutes)	
		0.75 kW or above	IE3, GB3	Continuous	Continuous	
Gearbox	Reduction Type	Hypoid Gear and Helical Gear				
	Lubrication Type	Grease Lubrication (Maintenance-free)				
	Output Shaft	JIS Key (JIS B 1301-1996 plain form) * The key is included with the right angle shaft type.				
	Output Shaft Material	Carbon Steel				
	Case Material	Aluminum (Frame size 55 is cast iron)				
Ambient Conditions	Ambient Temperature	-10 °C to 40 °C (Note 6)				
	Ambient Humidity	85 % max (No Condensation)				
	Altitude	1,000 m max				
	Installation Environment	A well ventilated place free from corrosive gas, explosive gas, vapor and/or chemicals Not to be exposed to direct rain. Not to be exposed to direct sunlight. The brake should not to be exposed to water, dust, oil/grease, or oil mist. Models with water protection rating IPX0 shall not be exposed directly to water.				
Paint	Paint Color	Gray				
Protective Structure (Note 7)		IP44 or IP40				IP40 or IP44
Mounting Direction		No limitations in mounting angle				
Motor Characteristics Table		P.360 (FS Type), P.364 (FF Type)				P.361
Performance Table		P.365 (FS Type), P.373 (FF Type)				P.368
Drawings		P.375 (FS Type), P.387 (FF Type)				P.376

Note 1: Applicable motor power is 0.1 kW to 0.75 kW.
Note 2: Applicable motor power is 0.75 kW to 2.2 kW.
Note 3: Applicable motor power is 0.1 kW to 0.4 kW.
Note 4: Right angle shaft types are not available in Single-phase motors.
Note 5: For CCC Standard, Three-phase 0.2 kW and Three-phase 0.4 kW are certified under limited duty cycle. Please be cautious upon selecting this product.
Note 6: The ambient temperature for Single-phase motors with a power of 0.1 kW (capacitor run) is 0 °C to 40 °C.
Note 7: The protective structure differs depending on the model.

FA Type Gearmotors/Gearmotors with Brake <Right Angle Hollow Bore/FAS>

Series		MID				
Motor Unit	Number of Phases	3-Phase				1-Phase
	Power	0.4 kW to 2.2 kW				0.4 kW
	Power Supply	Type	Global Standards Correspondence	Power Supply/Frequency		Standard Voltage 100 V/50 Hz, 100 V/60 Hz High Voltage (200 V Class) 200 V/50 Hz, 200 V/60 Hz
		Standard Voltage	UL/CE/CCC	200 V/50 Hz, 200 V/60 Hz, 220 V/60 Hz		
		High Voltage (400 V Class)	UL/CE/CCC	380 V/50 Hz, 400 V/50 Hz, 400 V/60 Hz, 440 V/60 Hz		
		Special Voltage	South Korea/ Taiwan UL/CE/CCC	220 V/60 Hz, 380 V/60 Hz (Dual Voltage)		
			China UL/CE/CCC	220 V/50 Hz, 230 V/50 Hz, 380 V/50 Hz (Dual Voltage)		
			China/South Korea/Taiwan UL/CE/CCC	220 V/50 Hz, 220 V/60 Hz, 380 V/50 Hz, 380 V/60 Hz (Dual Voltage) (Note 1)		
			Europe/North America UL/cUL/CE/CCC	415 V/50 Hz, 440 V/50 Hz, 480 V/60 Hz		
			North America/ Europe UL/cUL/CE/CCC	230 V/60 Hz, 460 V/60 Hz, 400 V/50 Hz (Dual Voltage) (Note 2)		
			North America/ Europe UL/cUL/CE/CCC	208 V/60 Hz, 230 V/60 Hz, 460 V/60 Hz, 400 V/50 Hz (Note 3)		
			Canada UL/cUL	575 V/60 Hz		
	Insulation Class	Ins. F				Ins. B
	Startup Method	Direct Power Input				Capacitor Start
	Cooling Method	Totally Enclosed Fan Cooled (TEFC) (IC411)				Totally Enclosed Fan Cooled (TEFC) (IC411)
	Number of Motor Poles	4				
	Rating	Power	Motor Efficiency	UL/CE Standard	CCC Standard	Continuous
		0.4 kW (Note 4)	IE2	Continuous	Short Time (120 minutes)	
		0.75 kW or above	IE3, GB3	Continuous	Continuous	
Gearbox	Reduction Type	Hypoid Gear and Helical Gear				
	Lubrication Type	Grease Lubrication (Maintenance-free)				
	Output Shaft	JIS Key (JIS B 1301-1996 plain form) * The key is included with the right angle shaft type.				
	Output Shaft Material	Carbon Steel				
	Case Material	Aluminum				
Ambient Conditions	Ambient Temperature	-10 °C to 40 °C				
	Ambient Humidity	85 % max (No Condensation)				
	Altitude	1,000 m max				
	Installation Environment	A well ventilated place free from corrosive gas, explosive gas, vapor and/or chemicals Not to be exposed to direct rain. Not to be exposed to direct sunlight. The brake should not to be exposed to water, dust, oil/grease, or oil mist. Models with water protection rating IPX0 shall not be exposed directly to water.				
Paint	Paint Color	Gray				
Protective Structure (Note 5)		IP44 or IP40				IP40 or IP44
Mounting Direction		No limitations in mounting angle				
Motor Characteristics Table		P.362 (FAS Type)				P.363
Performance Table		P.370 (FAS Type)				P.372
Drawings		P.385 (FAS Type)				P.386

Note 1: Applicable motor power is 0.4 kW to 0.75 kW.
Note 2: Applicable motor power is 0.75 kW to 2.2 kW.
Note 3: Applicable motor power is 0.4 kW.
Note 4: For the CCC Standard, 3-phase 0.4 kW is certified with a short time rating specification. Be careful upon use.
Note 5: The protective structure differs depending on the model.

F Type IP65 Gearmotors/IP65 Gearmotors with Brake <Right Angle Hollow Bore/FS>

Series		MID			
Motor Unit	Number of Phases	3-Phase			
	Power	0.1 kW to 2.2 kW			
	Power Supply	Type	Global Standards Correspondence	Power Supply/Frequency	
		Standard Voltage	UL/CE/CCC	200 V/50 Hz, 200 V/60 Hz, 220 V/60 Hz	
		High Voltage (400 V Class)	UL/CE/CCC	380 V/50 Hz, 400 V/50 Hz, 400 V/60 Hz, 440 V/60 Hz	
		Special Voltage	South Korea/Taiwan UL/CE/CCC	220 V/60 Hz, 380 V/60 Hz (Dual Voltage)	
			China UL/CE/CCC	220 V/50 Hz, 230 V/50 Hz, 380 V/50 Hz (Dual Voltage)	
			China/South Korea/Taiwan UL/CE/CCC	220 V/50 Hz, 220 V/60 Hz, 380 V/50 Hz, 380 V/60 Hz (Dual Voltage) (Note 1)	
			Europe/North America UL/cUL/CE/CCC	415 V/50 Hz, 440 V/50 Hz, 480 V/60 Hz	
			North America/Europe UL/cUL/CE/CCC	230 V/60 Hz, 460 V/60 Hz, 400 V/50 Hz (Dual Voltage) (Note 2)	
			North America/Europe UL/cUL/CE/CCC	208 V/60 Hz, 230 V/60 Hz, 460 V/60 Hz, 400 V/50 Hz (Note 3)	
			Canada UL/cUL	575 V/60 Hz	
	Insulation Class	Ins. F			
	Startup Method	Direct Power Input			
	Cooling Method	Totally Enclosed Fan Cooled (TEFC) (IC411) (All of 0.1 kW and 0.2 kW models without brake are totally enclosed non-ventilated (TENV) (IC410))			
	Number of Motor Poles	4			
	Rating	Power	Motor Efficiency	UL/CE Standard	CCC Standard
		0.1 kW	IE1	Continuous	Continuous
		0.2 kW, 0.4 kW (Note 4)	IE2	Continuous	Short Time (120 minutes)
		0.75 kW or above	IE3, GB3	Continuous	Continuous
Gearbox	Reduction Type	Hypoid Gear and Helical Gear			
	Lubrication Type	Grease Lubrication (Maintenance-free)			
	Output Shaft	JIS Key (JIS B 1301-1996 plain form)			
	Output Shaft Material	Stainless Steel or Carbon Steel			
	Case Material	Aluminum (Frame size 55 is cast iron)			
Ambient Conditions	Ambient Temperature	-10 °C to 40 °C			
	Ambient Humidity	100 % max (No Condensation)			
	Altitude	1,000 m max			
	Installation Environment	A place free from corrosive gas, explosive gas, and/or vapor Not to be exposed to strong rain and wind. Not to be exposed to direct sunlight. Not to be used underwater, environments with exposure to high pressure water splashes, and exposure to cleansing chemicals			
Paint	Paint Color	Gray			
Protective Structure		IP65			
Mounting Direction		No limitations in mounting angle			
Motor Characteristics Table		P.390			
Performance Table		P.392			
Drawings		P.397			

Note 1: Applicable motor power is 0.1 kW to 0.75 kW.
Note 2: Applicable motor power is 0.75 kW to 2.2 kW.
Note 3: Applicable motor power is 0.1 kW to 0.4 kW.
Note 4: For CCC Standard, Three-phase 0.2 kW and Three-phase 0.4 kW are certified under limited duty cycle. Please be cautious upon selecting this product.

FA Type IP65 Gearmotors/IP65 Gearmotors with Brake <Right Angle Hollow Bore/FAS>

Series		MID			
Motor Unit	Number of Phases	3-Phase			
	Power	0.4 kW to 2.2 kW			
	Power Supply	Type	Global Standards Correspondence	Power Supply/Frequency	
		Standard Voltage	UL/CE/CCC	200 V/50 Hz, 200 V/60 Hz, 220 V/60 Hz	
		High Voltage (400 V Class)	UL/CE/CCC	380 V/50 Hz, 400 V/50 Hz, 400 V/60 Hz, 440 V/60 Hz	
		Special Voltage	South Korea/Taiwan UL/CE/CCC	220 V/60 Hz, 380 V/60 Hz (Dual Voltage)	
			China UL/CE/CCC	220 V/50 Hz, 230 V/50 Hz, 380 V/50 Hz (Dual Voltage)	
			China/South Korea/Taiwan UL/CE/CCC	220 V/50 Hz, 220 V/60 Hz, 380 V/50 Hz, 380 V/60 Hz (Dual Voltage) (Note 1)	
			Europe/North America UL/cUL/CE/CCC	415 V/50 Hz, 440 V/50 Hz, 480 V/60 Hz	
			North America/Europe UL/cUL/CE/CCC	230 V/60 Hz, 460 V/60 Hz, 400 V/50 Hz (Dual Voltage) (Note 2)	
			North America/Europe UL/cUL/CE/CCC	208 V/60 Hz, 230 V/60 Hz, 460 V/60 Hz, 400 V/50 Hz (Note 3)	
			Canada UL/cUL	575 V/60 Hz	
	Insulation Class	Ins. F			
	Startup Method	Direct Power Input			
	Cooling Method	Totally Enclosed Fan Cooled (TEFC) (IC411)			
	Number of Motor Poles	4			
	Rating	Power	Motor Efficiency	UL/CE Standard	CCC Standard
		0.4 kW (Note 4)	IE2	Continuous	Short Time (120 minutes)
		0.75 kW or above	IE3, GB3	Continuous	Continuous
Gearbox	Reduction Type	Hypoid Gear and Helical Gear			
	Lubrication Type	Grease Lubrication (Maintenance-free)			
	Output Shaft	JIS Key (JIS B 1301-1996 plain form)			
	Output Shaft Material	Stainless Steel or Carbon Steel			
	Case Material	Aluminum			
Ambient Conditions	Ambient Temperature	-10 °C to 40 °C			
	Ambient Humidity	100 % max (No Condensation)			
	Altitude	1,000 m max			
	Installation Environment	A place free from corrosive gas, explosive gas, and/or vapor Not to be exposed to strong rain and wind. Not to be exposed to direct sunlight. Not to be used underwater, environments with exposure to high pressure water splashes, and exposure to cleansing chemicals			
Paint	Paint Color	Gray			
Protective Structure		IP65			
Mounting Direction		No limitations in mounting angle			
Motor Characteristics Table		P.391			
Performance Table		P.395			
Drawings		P.402			

Note 1: Applicable motor power is 0.4 kW to 0.75 kW.
Note 2: Applicable motor power is 0.75 kW to 2.2 kW.
Note 3: Applicable motor power is 0.4 kW.
Note 4: For CCC Standard, Three-phase 0.4 kW are certified under limited duty cycle. Please be cautious upon selecting this product.

F Type Gearboxes (Double Shaft Type) <Right Angle Hollow Bore/FS>

Series		MID
4 poles Motor Power Class		0.1 kW Class to 2.2 kW Class
Gearbox	Reduction Type	Hypoid Gear and Helical Gear
	Lubrication Type	Grease Lubrication (Maintenance-free)
	Output Shaft	JIS Key (JIS B 1301-1996 plain form) * The key is not included with the motor.
	Input Shaft	JIS Key (JIS B 1301-1996 plain form) * The key is not included with the motor.
	Output Shaft Material	Carbon Steel
	Input Shaft Material	Carbon Steel
	Case Material	Aluminum (Frame size 55 is cast iron)
Ambient Conditions	Ambient Temperature	-10 °C to 40 °C
	Ambient Humidity	85 % max (No Condensation)
	Altitude	1,000 m max
	Installation Environment	A place free from corrosive gas, explosive gas, and/or vapor. Well ventilated place with no dust.
	Installation Place	Indoors
Paint	Paint Color	Gray
Mounting Direction		No limitations in mounting angle
Performance Table		P.404
Drawings		P.407

FA Type Gearboxes (Double Shaft Type) <Right Angle Hollow Bore/FAS>

Series		MID
4 poles Motor Power Class		1.5 kW Class to 2.2 kW Class
Gearbox	Reduction Type	Hypoid Gear and Helical Gear
	Lubrication Type	Grease Lubrication (Maintenance-free)
	Output Shaft	JIS Key (JIS B 1301-1996 plain form) * The key is not included with the motor.
	Input Shaft	JIS Key (JIS B 1301-1996 plain form) * The key is not included with the motor.
	Output Shaft Material	Carbon Steel
	Input Shaft Material	Carbon Steel
	Case Material	Aluminum
Ambient Conditions	Ambient Temperature	-10 °C to 40 °C
	Ambient Humidity	85 % max (No Condensation)
	Altitude	1,000 m max
	Installation Environment	A place free from corrosive gas, explosive gas, and/or vapor. Well ventilated place with no dust.
	Installation Place	Indoors
Paint	Paint Color	Gray
Mounting Direction		No limitations in mounting angle
Performance Table		P.406
Drawings		P.410

F Type S-Type Gearboxes <Right Angle Hollow Bore/FS>

Series		MID
4 poles Motor Power Class		0.1 kW Class to 2.2 kW Class
Gearbox	Reduction Type	Hypoid Gear and Helical Gear
	Lubrication Type	Grease Lubrication (Maintenance-free)
	Output Shaft	JIS Key (JIS B 1301-1996 plain form) * The key is not included with the motor.
	Output Shaft Material	Carbon Steel
	Case Material	Aluminum (Frame size 55 is cast iron)
Ambient Conditions	Ambient Temperature	-10 °C to 40 °C
	Ambient Humidity	85 % max (No Condensation)
	Altitude	1,000 m max
	Installation Environment	A place free from corrosive gas, explosive gas, and/or vapor. Well ventilated place with no dust.
	Installation Place	Indoors
Paint	Paint Color	Gray
Mounting Direction		No limitations in mounting angle
Performance Table		P.412
Drawings		P.415

FA Type S-Type Gearboxes <Right Angle Hollow Bore/FAS>

Series		MID
4 poles Motor Power Class		1.5 kW Class to 2.2 kW Class
Gearbox	Reduction Type	Hypoid Gear and Helical Gear
	Lubrication Type	Grease Lubrication (Maintenance-free)
	Output Shaft	JIS Key (JIS B 1301-1996 plain form) * The key is not included with the motor.
	Output Shaft Material	Carbon Steel
	Case Material	Aluminum
Ambient Conditions	Ambient Temperature	-10 °C to 40 °C
	Ambient Humidity	85 % max (No Condensation)
	Altitude	1,000 m max
	Installation Environment	A place free from corrosive gas, explosive gas, and/or vapor. Well ventilated place with no dust.
	Installation Place	Indoors
Paint	Paint Color	Gray
Mounting Direction		No limitations in mounting angle
Performance Table		P.414
Drawings		P.418

Model and Type Codes

F Type Gearmotors/Gearmotors with Brake MID Series <Right Angle Hollow Bore/ FS, Right Angle Shaft/FF> [3-Phase]

Gearhead Type					Motor Type							Brake Specifications	Option	
Mounting Type	Frame Size	Shaft Arrangement	Reduction Ratio		Motor Type	Motor Specifications	Motor Power	Number of Phases	Supply Voltage	Standards	Terminal Box	Brake	Option	Option Code
FF	22	R	10	–	M	M	01	T	N	N	T	N		
FS	45	N	60	–	M	R	08	T	W	N	T	B4	X	AA
FS	55	N	100	–	M	R	15	T	K	N	T	B2	X	T9HZ
①	②	③	④		⑤	⑥	⑦	⑧	⑨	⑩	⑪	⑫	⑬	⑭

①Mounting Type	FS : Right Angle Hollow Bore (Frame size 55 is cast tiron only) FF : Right Angle Shaft			
②Frame Size and Output Shaft Diameter	Output Shaft Diameter (Internal Diameter)			
③Shaft Arrangement	Material	Shaft Arrangement		
		Right Angle Hollow Bore	Solid Shaft	
	Carbon Steel	N	Viewing from the input Shaft(↑), the Output shaft would be on the left side ↑  L	Viewing from the input Shaft(↑), the Output shaft would be on the right side ↑  R
				Viewing from the input Shaft(↑), the Output shaft would be on the both sides ↑  T
④Reduction Ratio	5: 1/5 to 15X: 1/1500 (7.5 = 7, 12.5 = 12)			
⑤Motor Type	M : Standard Induction Motor (IP40 or IP44)			
⑥Motor Specifications (Note 1)	M : IE1 Efficiency Ins. F (0.1 kW) : IE2 Efficiency Ins. F (0.2 kW to 0.4 kW)			
	R : IE3 Efficiency Ins. F (0.75 kW to 2.2 kW)			
⑦Motor Power	01 : 0.1 kW			
	02 : 0.2 kW			
	04 : 0.4 kW			
	08 : 0.75 kW			
	15 : 1.5 kW			
	22 : 2.2 kW			
⑧Number of Phases	T : 3-Phase			

⑨Supply Voltage (Note 2)	⑫Brake Specifications (Note 3)				
	N	B2	B4	J2	J4
N : 200 V/50 Hz, 200 V/60 Hz, 220 V/60 Hz	○	○		○	
W : 380 V/50 Hz, 400 V/50 Hz, 400 V/60 Hz, 440 V/60 Hz	○		○		○
K : 220 V/60 Hz, 380 V/60 Hz	○	○	○	○	○
C : 220 V/50 Hz, 230 V/50 Hz, 380 V/50 Hz	○	○	○	○	○
D : 220 V/50 Hz, 220 V/60 Hz, 380 V/50 Hz, 380 V/60 Hz	○	○	○	○	○
E : 415 V/50 Hz, 440 V/50 Hz, 480 V/60 Hz	○		○		○
U : 230 V/60 Hz, 460 V/60 Hz, 400 V/50 Hz	○	○	○	○	○
A : 208 V/60 Hz, 230 V/60 Hz, 460 V/60 Hz, 400 V/50 Hz	○	○	○	○	○
M : 575 V/60 Hz	○	○		○	

⑨Supply Voltage	⑩Standards: N : CE/UL/CCC A : UL * Supply Voltage : M (575 V/60 Hz) only
⑪Terminal Box (Note 4)	T : T Type Terminal Box (Steel Plate) N : Flying Leads
⑫Brake Specifications (Note 5)	N : No Brake B2 : 200 V Brake B4 : 400 V Brake J2 : 200 V Brake Motor with Manual Brake Release Lever (Optional) J4 : 400 V Brake Motor with Manual Brake Release Lever (Optional)
⑬Option	Blank : Standard Specification X : Special Specification Code
⑭Option Code (Note 6)	Built-in Rectifier Connection Code Please refer to the list of option codes on page 561 for details. Terminal Box Position Code Please refer to the list of option codes on page 583 for details. For other option codes, please refer to the list of option codes on page 1012.

Note 1: For CCC Standard, 0.2 kW and 0.4 kW are certified under limited duty cycle. Please be cautious upon selecting the product.
Note 2: Refer to the following for the corresponding motor powers for supply voltages.
Supply voltage D: 0.1 kW to 0.75 kW Supply voltage U: 0.75 kW to 2.2 kW Supply voltage A: 0.1 kW to 0.4 kW
Dual voltage is not available for gearmotors with brake and supply the voltage code “K”, “C”, “D”, “U” and “A”.
The motor voltage is limited by the brake specifications.
Note 3: ○ indicates a brake specification that can be manufactured.
Note 4: With regard to the types of flying leads, only supply voltage codes N and W are covered.
Note 5: The rectifier is included with the product.
Note 6: The option code will not be shown in the nomenclature on the nameplate. But it will be shown in the Option code row of the nameplate.

F Type Gearmotors/Gearmotors with Brake MID Series <Right Angle Hollow Bore/ FS> [1-Phase]

Gearhead Type					Motor Type							Brake Specifications	Option	
Mounting Type	Frame Size	Shaft Arrangement	Reduction Ratio		Motor Type	Motor Specifications	Motor Power	Number of Phases	Supply Voltage	Standards	Terminal Box	Brake	Option	Option Code
FS	25	N	50	–	M	M	01	S	N	J	A	N		
FS	32	N	450	–	M	M	02	C	W	J	A	B2		
FS	45	N	375	–	M	M	04	C	N	J	A	B2	X	T9HZ
①	②	③	④		⑤	⑥	⑦	⑧	⑨	⑩	⑪	⑫	⑬	⑭

①Mounting Type (Note 1)	FS	: Right Angle Hollow Bore (Frame size 55 is cast iron only)
②Frame Size and Output Shaft Diameter	Output Shaft Diameter (Internal Diameter)	
③Shaft Arrangement	N	: Right Angle Hollow Bore
④Reduction Ratio	5: 1/5 to 15X: 1/1500 (7.5 = 7, 12.5 = 12)	
⑤Motor Type	M	: Standard Induction Motor (IP44 or IP40)
⑥Motor Specifications	M	: IE1 Efficiency Ins. B
⑦Motor Power	01	: 0.1 kW
	02	: 0.2 kW
	04	: 0.4 kW
⑧Number of Phases	S	: 1-Phase Capacitor Run (Note 2)
	C	: 1-Phase Capacitor Start
⑨Supply Voltage (Note 3)	N	: 100 V/50 Hz, 100 V/60 Hz
	W	: 200 V/50 Hz, 200 V/60 Hz
⑩Standards	J	: No Standards
⑪Terminal Box	A	: A Type Terminal Box (Aluminum)
⑫Brake Specifications	N	: No Brake
	B2	: 200 V Brake
⑬Option	Blank	: Standard Specification
	X	: Special Specification Code
⑭Option Code (Note 4)	Terminal Box Position Code Please refer to page 585 for details.	

Note 1: Right angle shaft types are not available.
Note 2: 1-phase capacitor run type motors have built-in thermal protectors.
Refer to page 643 for the cautions for use.
Note 3: For voltages/frequencies not listed above, please contact your nearest Sales Office or the CS Center.
Note 4: The option code will not be shown in the nomenclature on the nameplate. But it will be shown in the Option code row of the nameplate.

FA Type Gearmotors/Gearmotors with Brake MID Series <Right Angle Hollow Bore/ FAS> [3-Phase]

Gearhead Type					Motor Type							Brake Specifications	Option	
Mounting Type	Frame Size	Shaft Arrangement	Reduction Ratio		Motor Type	Motor Specifications	Motor Power	Number of Phases	Supply Voltage	Standards	Terminal Box	Brake	Option	Option Code
FAS	55	N	600	–	M	M	04	T	N	N	T	B2	X	AA
FAS	55	N	10	–	M	R	22	T	N	N	T	N		
①	②	③	④		⑤	⑥	⑦	⑧	⑨	⑩	⑪	⑫	⑬	⑭

①Mounting Type	FAS : Right Angle Hollow Bore (55-frame only)	
②Frame Size and Output Shaft Diameter	Output Shaft Diameter (Internal Diameter)	
③Shaft Arrangement	Material	Shaft Arrangement Right Angle Hollow Bore
	Carbon Steel	N
④Reduction Ratio	5: 1/5 to 15X: 1/1500 (7.5 = 7, 12.5 = 12)	
⑤Motor Type	M : Standard Induction Motor (IP40 or IP44)	
⑥Motor Specifications (Note 1)	M : IE2 Efficiency Ins. F (0.4 kW)	
	R : IE3 Efficiency Ins. F (0.75 kW to 2.2 kW)	
⑦Motor Power	04 : 0.4 kW	
	08 : 0.75 kW	
	15 : 1.5 kW	
	22 : 2.2 kW	
⑧Number of Phases	T : 3-Phase	
⑨Supply Voltage	⑨Supply Voltage (Note 2)	⑫Brake Specifications (Note 3)

⑨Supply Voltage (Note 2)	N	B2	B4	J2	J4
N : 200 V/50 Hz, 200 V/60 Hz, 220 V/60 Hz	○	○		○	
W : 380 V/50 Hz, 400 V/50 Hz, 400 V/60 Hz, 440 V/60 Hz	○		○		○
K : 220 V/60 Hz, 380 V/60 Hz	○	○	○	○	○
C : 220 V/50 Hz, 230 V/50 Hz, 380 V/50 Hz	○	○	○	○	○
D : 220 V/50 Hz, 220 V/60 Hz, 380 V/50 Hz, 380 V/60 Hz	○	○	○	○	○
E : 415 V/50 Hz, 440 V/50 Hz, 480 V/60 Hz	○		○		○
U : 230 V/60 Hz, 460 V/60 Hz, 400 V/50 Hz	○	○	○	○	○
A : 208 V/60 Hz, 230 V/60 Hz, 460 V/60 Hz, 400 V/50 Hz	○	○	○	○	○
M : 575 V/60 Hz	○	○		○	

⑩Standards	N : CE/UL/CCC
	A : UL * Supply Voltage : M (575 V/60 Hz) only
⑪Terminal Box (Note 4)	T : T Type Terminal Box (Steel Plate)
	N : Flying Leads
⑫Brake Specifications (Note 5)	N : No Brake
	B2 : 200 V Brake
	B4 : 400 V Brake
	J2 : 200 V Brake Motor with Manual Brake Release Lever (Optional)
	J4 : 400 V Brake Motor with Manual Brake Release Lever (Optional)
⑬Option	Blank : Standard Specification
	X : Special Specification Code
⑭Option Code (Note 6)	Built-in Rectifier Connection Code Please refer to the list of option codes on page 561 for details.
	Terminal Box Position Code Please refer to the list of option codes on page 583 for details.
	For other option codes, please refer to the list of option codes on page 1012.

Note 1: For the CCC Standard, 0.4 kW is certified with a short time rating specification. Be careful upon use.
Note 2: Refer to the following for the corresponding motor powers for supply voltages.
Supply voltage D: 0.4 kW to 0.75 kW Supply voltage U: 0.75 kW to 2.2 kW Supply voltage A: 0.4 kW
Dual voltage is not available for gearmotors with brake and supply the voltage code “K”, “C”, “D”, “U” and “A”.
The motor voltage is limited by the brake specifications.
Note 3: ○ indicates a brake specification that can be manufactured.
Note 4: With regard to the types of flying leads, only supply voltage codes N and W are covered.
Note 5: The rectifier is included with the product.
Note 6: The option code will not be shown in the nomenclature on the nameplate. But it will be shown in the Option code row of the nameplate.
Note 7: Right angle shaft types are not available.

FA Type Gearmotors/Gearmotors with Brake MID Series <Right Angle Hollow Bore/ FAS> [1-Phase]

Gearhead Type					Motor Type							Brake Specifications	Option	
Mounting Type	Frame Size	Shaft Arrangement	Reduction Ratio		Motor Type	Motor Specifications	Motor Power	Number of Phases	Supply Voltage	Standards	Terminal Box	Brake	Option	Option Code
FAS	55	N	600	–	M	M	04	C	N	J	A	N		
①	②	③	④		⑤	⑥	⑦	⑧	⑨	⑩	⑪	⑫	⑬	⑭

①Mounting Type (Note 1)	FAS : Right Angle Hollow Bore (55-frame only)
②Frame Size and Output Shaft Diameter	Output Shaft Diameter (Internal Diameter)
③Shaft Arrangement	N : Right Angle Hollow Bore
④Reduction Ratio	5: 1/5 to 15X: 1/1500 (7.5 = 7, 12.5 = 12)
⑤Motor Type	M : Standard Induction Motor (IP44 or IP40)
⑥Motor Specifications	M : IE1 Efficiency Ins. B
⑦Motor Power	04 : 0.4 kW
⑧Number of Phases	C : 1-Phase Capacitor Start
⑨Supply Voltage (Note 2)	N : 100 V/50 Hz, 100 V/60 Hz
	W : 200 V/50 Hz, 200 V/60 Hz
⑩Standards	J : No Standards
⑪Terminal Box	A : A Type Terminal Box (Aluminum)
⑫Brake Specifications	N : No Brake
	B2 : 200 V Brake
⑬Option	Blank : Standard Specification
	X : Special Specification Code
⑭Option Code (Note 3)	Terminal Box Position Code Please refer to page 585 for details.

Note 1: Right angle shaft types are not available.
Note 2: For voltages/frequencies not listed above, please contact your nearest Sales Office or the CS Center.
Note 3: The option code will not be shown in the nomenclature on the nameplate. But it will be shown in the Option code row of the nameplate.

F Type IP65 Gearmotors/IP65 Gearmotors with Brake MID Series <Right Angle Hollow Bore/ FS> [3-Phase]

Gearhead Type					Motor Type							Brake Specifications	Option	
Mounting Type	Frame Size	Shaft Arrangement	Reduction Ratio		Motor Type	Motor Specifications	Motor Power	Number of Phases	Supply Voltage	Standards	Terminal Box	Brake	Option	Option Code
FS	25	S	10	–	W	M	01	T	N	N	E	N		
FS	45	N	60	–	W	R	08	T	W	N	E	V4	X	AA
FS	55	S	100	–	W	R	15	T	K	N	E	N		
①	②	③	④		⑤	⑥	⑦	⑧	⑨	⑩	⑪	⑫	⑬	⑭

①Mounting Type (Note 1)	FS : Right Angle Hollow Bore (Frame size 55 is cast iron only)			
②Frame Size and Output Shaft Diameter	Output Shaft Diameter (Internal Diameter)			
③Shaft Arrangement and Material	Material	Shaft Arrangement Right Angle Hollow Bore		
	Carbon Steel	N		
	Stainless Steel	S		
④Reduction Ratio	5: 1/5 to 15X: 1/1500 (7.5 = 7, 12.5 = 12)			
⑤Motor Type	W : IP65 Induction Motor			
⑥Motor Specifications (Note 2)	M : IE1 Efficiency Ins. F (0.1 kW) : IE2 Efficiency Ins. F (0.2 kW to 0.4 kW)			
	R : IE3 Efficiency Ins. F (0.75 kW to 2.2 kW)			
⑦Motor Power	01 : 0.1 kW			
	02 : 0.2 kW			
	04 : 0.4 kW			
	08 : 0.75 kW			
	15 : 1.5 kW			
	22 : 2.2 kW			
⑧Number of Phases (Note 3)	T : 3-Phase			
⑨Supply Voltage	⑨Supply Voltage (Note 4)	⑫Brake Specifications (Note 5) N	V2	V4
	N : 200 V/50 Hz, 200 V/60 Hz, 220 V/60 Hz	○	○	
	W : 380 V/50 Hz, 400 V/50 Hz, 400 V/60 Hz, 440 V/60 Hz	○		○
	K : 220 V/60 Hz, 380 V/60 Hz	○	○	○
	C : 220 V/50 Hz, 230 V/50 Hz, 380 V/50 Hz	○	○	○
	D : 220 V/50 Hz, 220 V/60 Hz, 380 V/50 Hz, 380 V/60 Hz	○	○	○
	E : 415 V/50 Hz, 440 V/50 Hz, 480 V/60 Hz	○		○
	U : 230 V/60 Hz, 460 V/60 Hz, 400 V/50 Hz	○	○	○
	A : 208 V/60 Hz, 230 V/60 Hz, 460 V/60 Hz, 400 V/50 Hz	○	○	○
	M : 575 V/60 Hz	○	○	
⑩Standards	N : CE/UL/CCC			
	A : UL * Supply Voltage : M (575 V/60 Hz) only			
⑪Terminal Box	E : E Type Terminal Box (Aluminum)			
⑫Brake Specifications	N : No Brake			
	V2 : IP65 200 V Class Brake (Note 6)			
	V4 : IP65 400 V Class Brake (Note 6)			
⑬Option	Blank : Standard Specification			
	X : Special Specification Code			
⑭Option Code (Note 7)	Built-in Rectifier Connection Code Please refer to the list of option codes on page 561 for details.			
	Terminal Box Position Code Please refer to the list of option codes on page 583 for details.			
	For other option codes, please refer to the list of option codes on page 1012.			

Note 1: Right angle shaft types are not available.
Note 2: For CCC Standard, 0.2 kW and 0.4 kW are certified under limited duty cycle. Please be cautious upon selecting the product.
Note 3: Single-phase types are not available.
Note 4: Refer to the following for the corresponding motor powers for supply voltages.
Supply voltage D: 0.1 kW to 0.75 kW Supply voltage U: 0.75 kW to 2.2 kW Supply voltage A: 0.1 kW to 0.4 kW
Dual voltage is not available for gearmotors with brake and supply the voltage code “K”, “C”, “D”, “U” and “A”.
The motor voltage is limited by the brake specifications.
Note 5: ○ indicates a brake specification that can be manufactured.
Note 6: IP65 gearmotors with a brake are not available with motor powers of 1.5 kW and 2.2 kW.
Note 7: The option code will not be shown in the nomenclature on the nameplate. But it will be shown in the Option code row of the nameplate.

FA Type IP65 Gearmotors/IP65 Gearmotors with Brake MID Series <Right Angle Hollow Bore/ FAS> [3-Phase]

Gearhead Type					Motor Type							Brake Specifications	Option	
Mounting Type	Frame Size	Shaft Arrangement	Reduction Ratio		Motor Type	Motor Specifications	Motor Power	Number of Phases	Supply Voltage	Standards	Terminal Box	Brake	Option	Option Code
FAS	55	N	600	–	W	M	04	T	N	N	E	V2	X	AA
FAS	55	N	10	–	W	R	22	T	N	N	E	N		
①	②	③	④		⑤	⑥	⑦	⑧	⑨	⑩	⑪	⑫	⑬	⑭

①Mounting Type (Note 1)	FAS : Right Angle Hollow Bore (55-frame only)			
②Frame Size and Output Shaft Diameter	Output Shaft Diameter (Internal Diameter)			
③Shaft Arrangement and Material	Material	Shaft Arrangement		
		Right Angle Hollow Bore		
	Carbon Steel	N		
	Stainless Steel	S		
④Reduction Ratio	5: 1/5 to 15X: 1/1500 (7.5 = 7, 12.5 = 12)			
⑤Motor Type	W : IP65 Induction Motor			
⑥Motor Specifications (Note 2)	M : IE2 Efficiency Ins. F (0.4 kW)			
	R : IE3 Efficiency Ins. F (0.75 kW to 2.2 kW)			
⑦Motor Power	04 : 0.4 kW			
	08 : 0.75 kW			
	15 : 1.5 kW			
	22 : 2.2 kW			
⑧Number of Phases (Note 3)	T : 3-Phase			
⑨Supply Voltage	⑨Supply Voltage (Note 4)	⑫Brake Specifications (Note 5)		
		N	V2	V4
	N : 200 V/50 Hz, 200 V/60 Hz, 220 V/60 Hz	○	○	
	W : 380 V/50 Hz, 400 V/50 Hz, 400 V/60 Hz, 440 V/60 Hz	○		○
	K : 220 V/60 Hz, 380 V/60 Hz	○	○	○
	C : 220 V/50 Hz, 230 V/50 Hz, 380 V/50 Hz	○	○	○
	D : 220 V/50 Hz, 220 V/60 Hz, 380 V/50 Hz, 380 V/60 Hz	○	○	○
	E : 415 V/50 Hz, 440 V/50 Hz, 480 V/60 Hz	○		○
	U : 230 V/60 Hz, 460 V/60 Hz, 400 V/50 Hz	○	○	○
	A : 208 V/60 Hz, 230 V/60 Hz, 460 V/60 Hz, 400 V/50 Hz	○	○	○
	M : 575 V/60 Hz	○	○	
⑩Standards	N : CE/UL/CCC			
	A : UL * Supply Voltage : M (575 V/60 Hz) only			
⑪Terminal Box	E : E Type Terminal Box (Aluminum)			
⑫Brake Specifications	N : No Brake			
	V2 : IP65 200 V Class Brake (Note 6)			
	V4 : IP65 400 V Class Brake (Note 6)			
⑬Option	Blank : Standard Specification			
	X : Special Specification Code			
⑭Option Code (Note 7)	Built-in Rectifier Connection Code Please refer to the list of option codes on page 561 for details.			
	Terminal Box Position Code Please refer to the list of option codes on page 583 for details.			
	For other option codes, please refer to the list of option codes on page 1012.			

Note 1: Right angle shaft types are not available.
Note 2: For CCC Standard, 0.4 kW are certified under limited duty cycle. Please be cautious upon selecting the product.
Note 3: Single-phase types are not available.
Note 4: Refer to the following for the corresponding motor powers for supply voltages.
Supply voltage D: 0.4 kW to 0.75 kW Supply voltage U: 0.75 kW to 2.2 kW Supply voltage A: 0.4 kW
Dual voltage is not available for gearmotors with brake and supply the voltage code “K”, “C”, “D”, “U” and “A”.
The motor voltage is limited by the brake specifications.
Note 5: ○ indicates a brake specification that can be manufactured.
Note 6: IP65 gearmotors with a brake are not available with motor powers of 1.5 kW and 2.2 kW.
Note 7: The option code will not be shown in the nomenclature on the nameplate. But it will be shown in the Option code row of the nameplate.

F Type Gearboxes (Double Shaft Type) MID Series <Right Angle Hollow Bore/FS>

Mounting Type		Motor Type		Frame Size		Reduction Ratio		Motor Power Class	Option	Terminal Box	Option	Option Code
FS	–		–	35	–	50	–	040				
FS	–		–	25	–	100	–	010			X	
①		②		③		④		⑤	⑥	⑦	⑧	⑨

①Mounting Type (Note 1)	FS : Right Angle Hollow Bore Type (Frame size 55 is cast iron only)
②Motor Type	Blank : Without Motor (Double Shaft Type)
③Frame Size and Output Shaft Diameter	Output Shaft Diameter (Internal Diameter)
④Reduction Ratio	5: 1/5 to 240: 1/240
⑤Motor Power Class	010 : 0.1 kW Class
	020 : 0.2 kW Class
	040 : 0.4 kW Class
	075 : 0.75 kW Class
	150 : 1.5 kW Class
	220 : 2.2 kW Class
⑥ ⑦Options	Blank : Standard Specification There is no applicable option.
⑧Option	Blank : Standard Specification
	X : Special Specification Code
⑨Option Code (Note 2)	Blank : Standard Specification

Note 1: Right angle shaft types are not available.
Note 2: The option code will not be shown in the nomenclature on the nameplate. But it will be shown in the Option code row of the nameplate.

FA Type Gearboxes (Double Shaft Type) MID Series <Right Angle Hollow Bore/FAS>

Mounting Type	Motor Type		Frame Size		Reduction Ratio		Motor Power Class	Option	Terminal Box	Option	Option Code
FAS		–	55	–	10	–	150				
①	②		③		④		⑤	⑥	⑦	⑧	⑨

①Mounting Type (Note 1)	FAS : Right Angle Hollow Bore Type (55-frame only)
②Motor Type	Blank : Without Motor (Double Shaft Type)
③Frame Size and Output Shaft Diameter	Output Shaft Diameter (Internal Diameter)
④Reduction Ratio	5: 1/5 to 120: 1/120 (7.5=7, 12.5=12)
⑤Motor Power Class	150 : 1.5 kW Class
	220 : 2.2 kW Class
⑥ ⑦Options	Blank : Standard Specification There is no applicable option.
⑧Option	Blank : Standard Specification
	X : Special Specification Code
⑨Option Code (Note 2)	Blank : Standard Specification

Note 1: Right angle shaft types are not available.
Note 2: The option code will not be shown in the nomenclature on the nameplate. But it will be shown in the Option code row of the nameplate.

F Type S-Type Gearboxes MID Series <Right Angle Hollow Bore/FS>

Mounting Type	Motor Type		Frame Size		Reduction Ratio		Motor Power Class	Option	Terminal Box	Option
FS	S	–	35	–	50	–	040			
FS	S	–	30	–	100	–	020			X
①	②		③		④		⑤	⑥	⑦	⑧

①Mounting Type (Note 1)	FS	: Right Angle Hollow Bore Type (Frame size 55 is cast iron only)
②Motor Type	S	: Can be Equipped with Designated Motor (S-Type)
③Frame Size and Output Shaft Diameter	Output Shaft Diameter (Internal Diameter)	
④Reduction Ratio	5: 1/5 to 240: 1/240 (7.5=7, 12.5=12)	
⑤Motor Power Class	010	: 0.1 kW Class
	020	: 0.2 kW Class
	040	: 0.4 kW Class
	075	: 0.75 kW Class
	150	: 1.5 kW Class
	220	: 2.2 kW Class
⑥ ⑦Options	Blank	: Standard Specification
⑧Option	Blank	: Standard Specification
	X	: Special Specification Code

Note 1: Right angle shaft types are not available.

FA Type S-Type Gearboxes MID Series <Right Angle Hollow Bore/FAS>

Mounting Type	Motor Type		Frame Size		Reduction Ratio		Motor Power Class	Option	Terminal Box	Option
FAS	S	–	55	–	30	–	220			
①	②		③		④		⑤	⑥	⑦	⑧

①Mounting Type (Note 1)	FAS	: Right Angle Hollow Bore Type (Frame size 55 is aluminum only)
②Motor Type	S	: Can be Equipped with Designated Motor (S-Type)
③Frame Size and Output Shaft Diameter	Output Shaft Diameter (Internal Diameter)	
④Reduction Ratio	5: 1/5 to 120: 1/120	
⑤Motor Power Class	150	: 1.5 kW Class
	220	: 2.2 kW Class
⑥ ⑦Options	Blank	: Standard Specification
⑧Option	Blank	: Standard Specification
	X	: Special Specification Code

Note 1: Right angle shaft types are not available.

Standard Model Lineup

F Type Gearmotors/Gearmotors with Brake MID Series <Right Angle Hollow Bore/ FS>

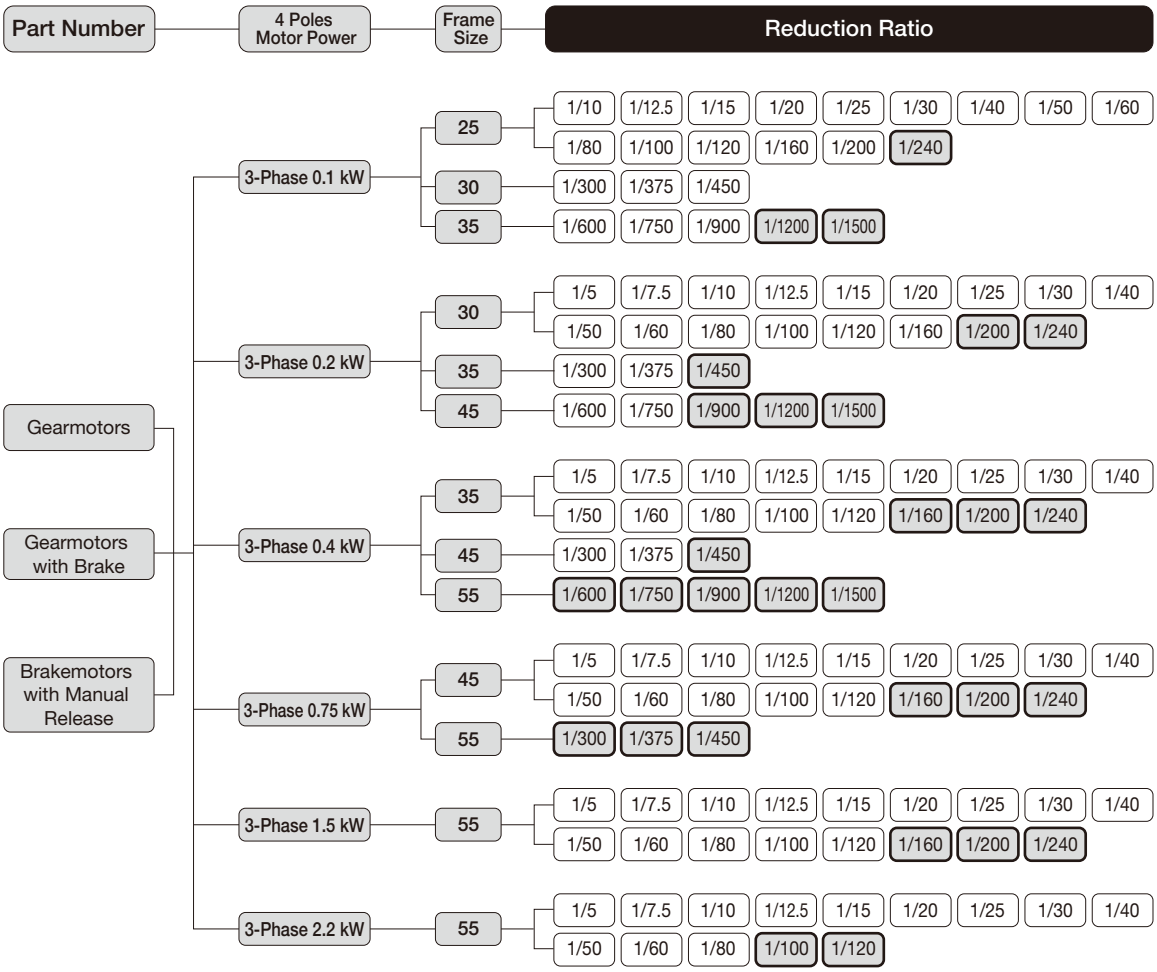

Note 1: ▭ indicates a limited torque type. Please make sure to check the allowable output shaft torque in the performance table.

F Type Gearmotors/Gearmotors with Brake MID Series <Right Angle Hollow Bore/ FS>

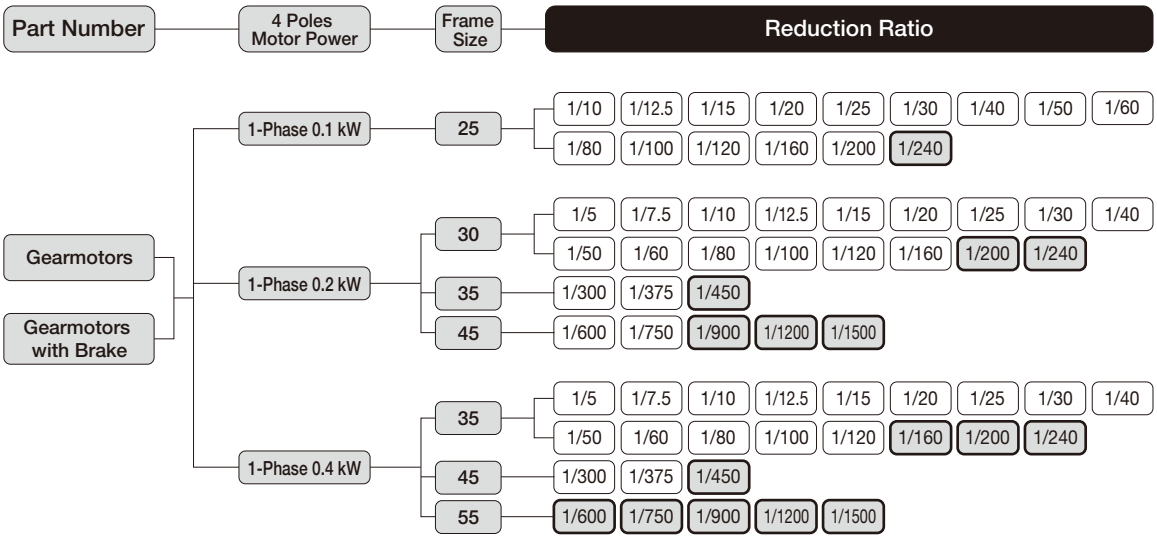

Note 1: ▭ indicates a limited torque type. Please make sure to check the allowable output shaft torque in the performance table.

FA Type Gearmotors/Gearmotors with Brake MID Series <Right Angle Hollow Bore/ FAS>

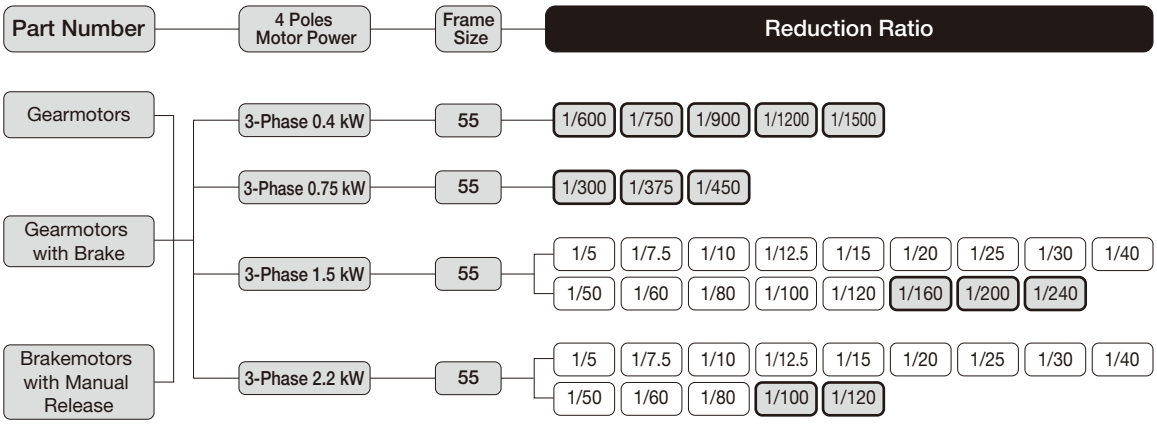

Note 1: ▭ indicates a limited torque type. Please make sure to check the allowable output shaft torque in the performance table.

FA Type Gearmotors/Gearmotors with Brake MID Series <Right Angle Hollow Bore/ FAS>

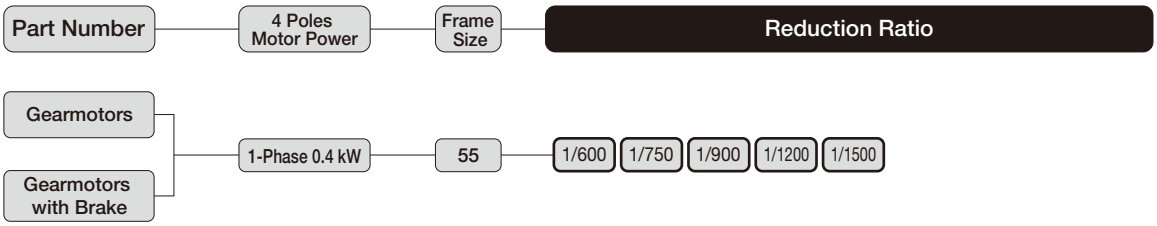

Note 1: ▭ indicates a limited torque type. Please make sure to check the allowable output shaft torque in the performance table.

F Type Gearmotors/Gearmotors with Brake MID Series <Right Angle Shaft/ FF>

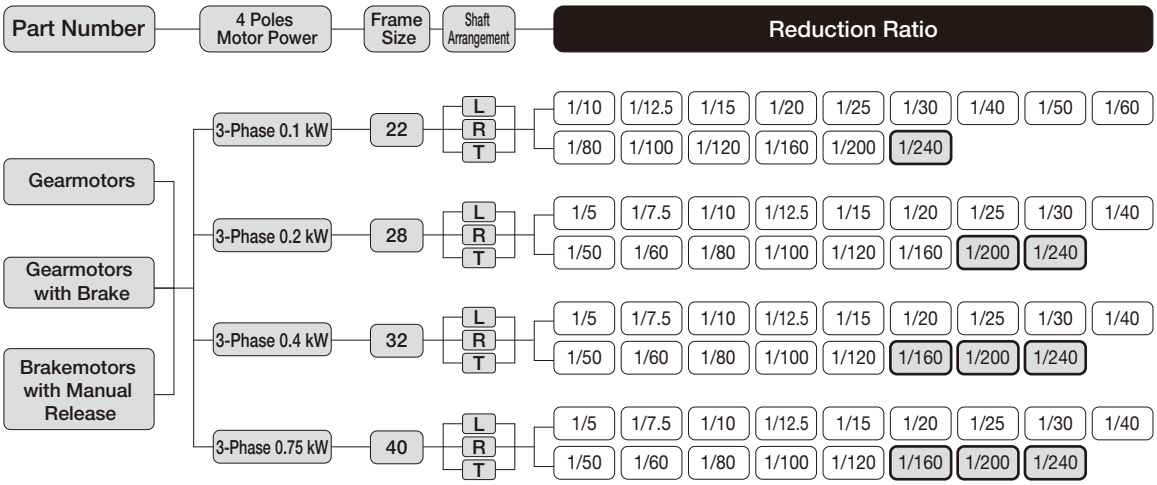

Note 1: ▭ indicates a limited torque type. Please make sure to check the allowable output shaft torque in the performance table.

F Type IP65 Gearmotors/IP65 Gearmotors with Brake MID Series <Right Angle Hollow Bore/ FS>

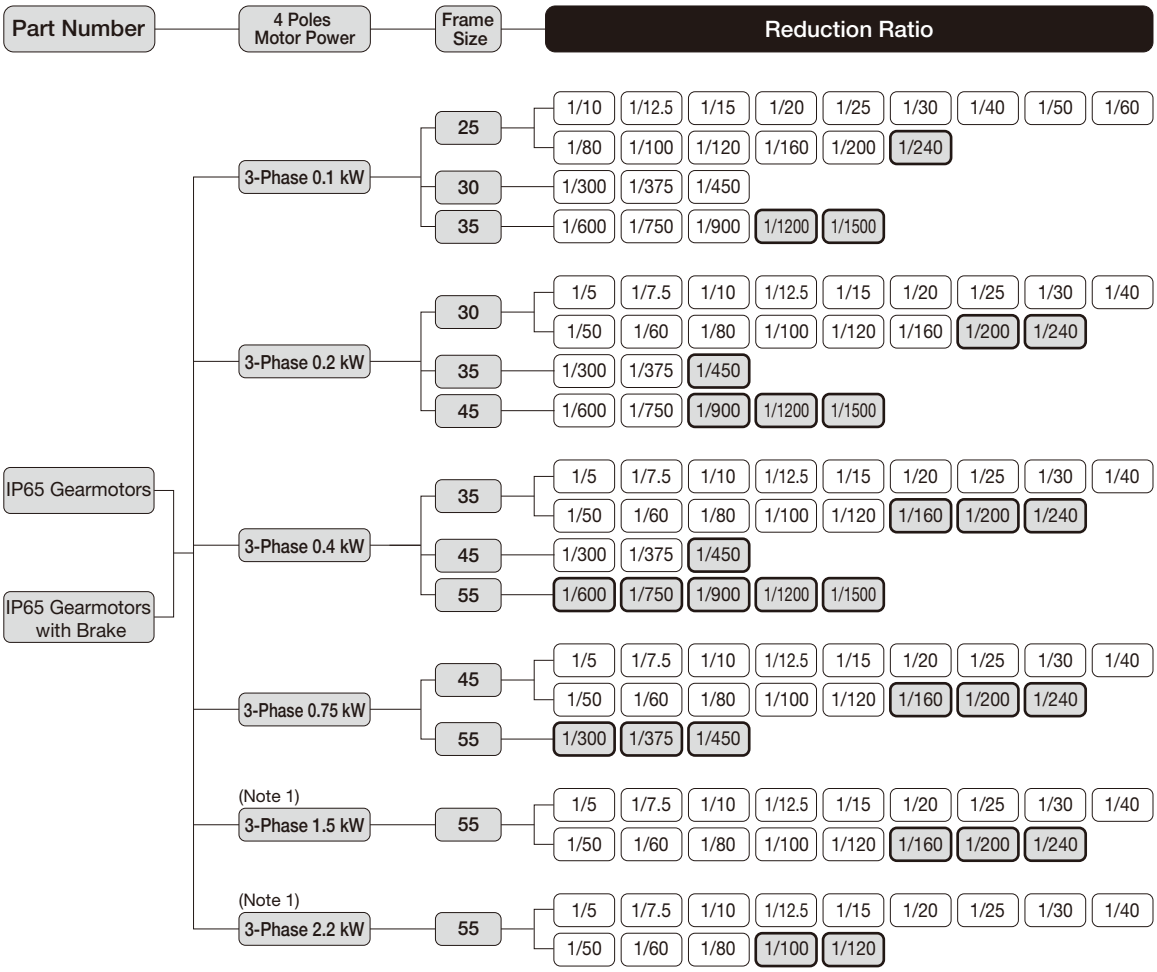

Note 1: IP65 gearmotors with a brake are not available with motor powers of 1.5 kW and 2.2 kW.
Note 2: ▭ indicates a limited torque type. Please make sure to check the allowable output shaft torque in the performance table.

FA Type IP65 Gearmotors/IP65 Gearmotors with Brake MID Series <Right Angle Hollow Bore/ FAS>

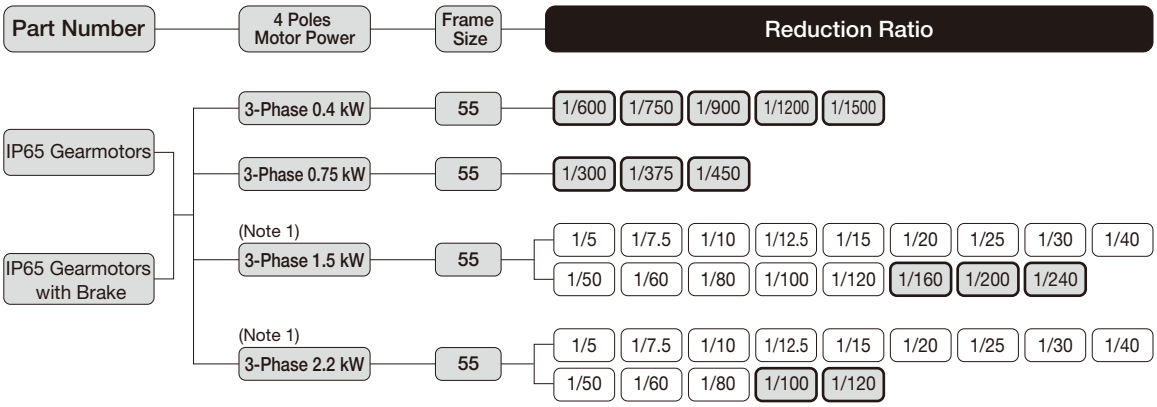

Note 1: IP65 gearmotors with a brake are not available with motor powers of 1.5 kW and 2.2 kW.
Note 2: ▭ indicates a limited torque type. Please make sure to check the allowable output shaft torque in the performance table.

F Type Gearboxes (Double Shaft Type) MID Series <Right Angle Hollow Bore/FS>

Part Number	Motor Power Class	Frame Size	Reduction Ratio
Gearboxes (Double Shaft Type)	0.1 kW	25	1/10, 1/12.5, 1/15, 1/20, 1/25, 1/30, 1/40, 1/50, 1/60, 1/80, 1/100, 1/120, 1/160, 1/200, **1/240**
	0.2 kW	30	1/5, 1/7.5, 1/10, 1/12.5, 1/15, 1/20, 1/25, 1/30, 1/40, 1/50, 1/60, 1/80, 1/100, 1/120, 1/160, **1/200**, **1/240**
	0.4 kW	35	1/5, 1/7.5, 1/10, 1/12.5, 1/15, 1/20, 1/25, 1/30, 1/40, 1/50, 1/60, 1/80, 1/100, 1/120, **1/160**, **1/200**, **1/240**
	0.75 kW	45	1/5, 1/7.5, 1/10, 1/12.5, 1/15, 1/20, 1/25, 1/30, 1/40, 1/50, 1/60, 1/80, 1/100, 1/120, **1/160**, **1/200**, **1/240**
	1.5 kW	55	1/5, 1/7.5, 1/10, 1/12.5, 1/15, 1/20, 1/25, 1/30, 1/40, 1/50, 1/60, 1/80, 1/100, 1/120, **1/160**, **1/200**, **1/240**
	2.2 kW	55	1/5, 1/7.5, 1/10, 1/12.5, 1/15, 1/20, 1/25, 1/30, 1/40, 1/50, 1/60, 1/80, **1/100**, **1/120**

Note 1: ▭ indicates a limited torque type. Please make sure to check the allowable output shaft torque in the performance table.

FA Type Gearboxes (Double Shaft Type) MID Series <Right Angle Hollow Bore/FAS>

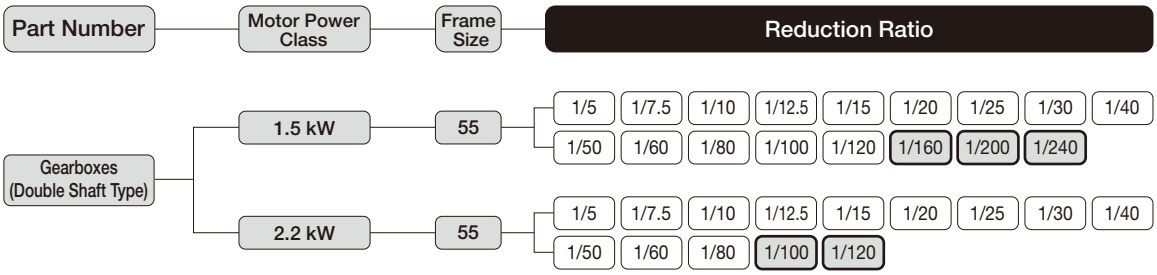

Note 1: ▭ indicates a limited torque type. Please make sure to check the allowable output shaft torque in the performance table.

F Type S-Type Gearboxes MID Series <Right Angle Hollow Bore/FS>

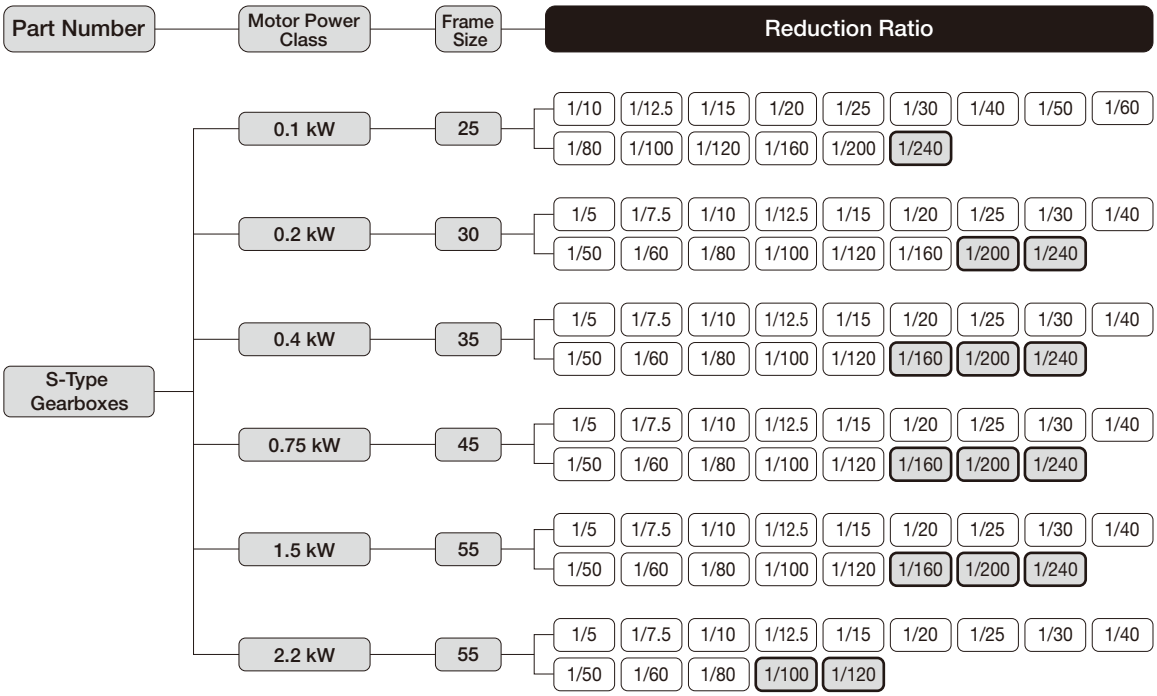

Note 1: ▭ indicates a limited torque type. Please make sure to check the allowable output shaft torque in the performance table.

FA Type S-Type Gearboxes MID Series <Right Angle Hollow Bore/FAS>

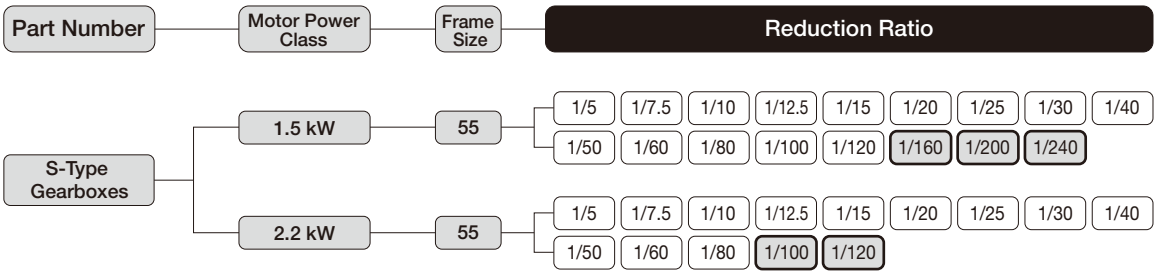

Note 1: ▭ indicates a limited torque type. Please make sure to check the allowable output shaft torque in the performance table.

MEMO

1. Gearmotors
Gearmotors with Brake

1-1. Motor Characteristics Table

F Type 3-Phase Standard Voltage/High Voltage (400 V Class)/Special Voltage <Right Angle Hollow Bore/FS>

Series	Power	Power Supply/ Certification Codes	Voltage (V)	Frequency (Hz)	Rated Current (A)	Startup Current (A)	Rated Speed (r/min)
MID	0.1kW	NN	200/200/220	50/60/60	0.61/0.54/0.54	2.39/2.27/2.52	1410/1690/1710
		WN	380/400/400/440	50/50/60/60	0.31/0.31/0.28/0.28	1.12/1.18/1.12/1.22	1400/1410/1690/1720
		KN	220/380	60/60	0.52/0.30	1.90/1.10	1680/1680
		CN	220/230/380	50/50/50	0.55/0.54/0.31	1.94/2.03/1.12	1400/1410/1400
		DN	220/220/380/380	50/60/50/60	0.55/0.52/0.31/0.30	1.94/1.90/1.12/1.10	1400/1680/1400/1680
		EN	415/440/480	50/50/60	0.30/0.29/0.26	1.06/1.12/1.17	1390/1420/1720
		AN	208/230/460/400	60/60/60/50	0.54/0.57/0.29/0.31	2.35/2.62/1.26/1.21	1690/1730/1730/1410
		MA	575	60	0.20	0.87	1700
	0.2 kW IE2	NN	200/200/220	50/60/60	1.1/1.0/1.0	4.70/4.35/4.85	1400/1680/1700
		WN	380/400/400/440	50/50/60/60	0.56/0.56/0.50/0.50	2.29/2.38/2.29/2.48	1390/1400/1680/1710
		KN	220/380	60/60	0.93/0.52	3.70/2.20	1680/1680
		CN	220/230/380	50/50/50	0.99/0.98/0.56	3.97/4.15/2.29	1400/1410/1390
		DN	220/220/380/380	50/60/50/60	0.99/0.93/0.56/0.52	3.97/3.70/2.29/2.20	1400/1680/1390/1680
		EN	415/440/480	50/50/60	0.50/0.50/0.45	1.75/1.86/2.00	1370/1400/1700
		AN	208/230/460/400	60/60/60/50	1.0/1.0/0.50/0.56	4.78/5.16/2.56/2.44	1680/1720/1720/1400
		MA	575	60	0.40	1.78	1710
	0.4 kW IE2	NN	200/200/220	50/60/60	2.1/1.8/1.8	9.60/8.54/9.21	1400/1680/1700
		WN	380/400/400/440	50/50/60/60	1.0/1.0/0.9/0.9	4.43/4.64/4.24/4.85	1390/1400/1680/1710
		KN	220/380	60/60	1.7/1.0	7.10/4.09	1670/1670
		CN	220/230/380	50/50/50	1.8/1.8/1.0	7.63/8.04/4.43	1390/1400/1390
		DN	220/220/380/380	50/60/50/60	1.8/1.7/1.0/1.0	7.63/7.10/4.43/4.09	1390/1670/1390/1670
		EN	415/440/480	50/50/60	0.96/0.95/0.82	4.45/4.56/4.52	1390/1410/1680
		AN	208/230/460/400	60/60/60/50	1.8/1.8/0.9/1.0	9.21/9.82/5.06/4.62	1680/1720/1720/1400
		MA	575	60	0.68	3.94	1700
	0.75 kW IE3	NN	200/200/220	50/60/60	3.5/3.2/3.1	21.8/19.0/21.1	1450/1740/1750
		WN	380/400/400/440	50/50/60/60	1.73/1.72/1.58/1.54	10.2/10.8/9.8/10.7	1440/1450/1740/1750
		KN	220/380	60/60	2.9/1.7	16.9/9.8	1740/1740
		CN	220/230/380	50/50/50	3.0/3.0/1.7	17.8/18.7/10.3	1450/1450/1440
		DN	220/220/380/380	50/60/50/60	3.1/2.9/1.8/1.7	19.3/16.9/11.2/9.8	1450/1740/1450/1740
		EN	415/440/480	50/50/60	1.54/1.52/1.36	8.6/9.3/9.0	1440/1450/1750
		UN	230/460/400	60/60/50	3.1/1.5/1.7	22.3/11.2/10.8	1760/1760/1450
		MA	575	60	1.16	7.2	1750
	1.5 kW IE3	NN	200/200/220	50/60/60	6.7/6.1/5.9	45.6/40.3/45.1	1450/1740/1760
		WN	380/400/400/440	50/50/60/60	3.4/3.4/3.1/3.0	21.9/23.2/20.4/22.8	1450/1450/1750/1760
		KN	220/380	60/60	5.9/3.4	45.1/25.8	1760/1760
		CN	220/230/380	50/50/50	5.9/5.9/3.4	38.5/40.4/22.1	1450/1450/1450
		EN	415/440/480	50/50/60	3.1/3.1/2.8	20.8/22.2/21.2	1450/1460/1760
		UN	230/460/400	60/60/50	5.9/2.9/3.3	44.9/22.6/23.2	1760/1760/1450
		MA	575	60	2.2	17.0	1760
	2.2 kW IE3	NN	200/200/220	50/60/60	9.3/8.6/8.2	70.3/56.9/63.7	1470/1760/1770
		WN	380/400/400/440	50/50/60/60	4.5/4.4/4.2/3.9	30.0/32.0/25.0/28.0	1440/1450/1740/1750
		KN	220/380	60/60	8.3/4.8	65.0/38.0	1770/1770
		CN	220/230/380	50/50/50	7.9/7.7/4.5	52.0/54.3/30.0	1460/1470/1440
		EN	415/440/480	50/50/60	4.3/4.3/3.8	33.1/35.5/29.8	1460/1470/1770
		UN	230/460/400	60/60/50	7.9/4.0/4.5	65.2/34.8/36.3	1770/1770/1470
		MA	575	60	3.3	24.4	1760

The rated current in the motor characteristics table is the current data for the motor operating without a gearbox.
With regard to gearmotors with a brake, it is necessary to consider the current value flowing through the brake as needed.
For more details, please contact your nearest Sales Office or the CS Center.

F Type 1-Phase Standard Voltage <Right Angle Hollow Bore/FS>

Series	Power	Startup Method	Voltage (V)	Frequency (Hz)	Rated Current (A)	Startup Current (A)	Rated Speed (r/min)	Startup Torque (%)	Breakdown Torque (%)
MID	0.1 kW	Capacitor Run	100/100	50/60	1.7/1.9	4.40/4.07	1400/1700	60/70	165/172
	0.2 kW	Capacitor Start	100/100	50/60	5.1/4.5	20.0/20.0	1420/1700	276/294	194/187
	0.4 kW	Capacitor Start	100/100	50/60	8.7/7.9	32.0/32.0	1440/1730	210/205	189/178

The rated current in the motor characteristics table is the current data for the motor operating without a gearbox.
With regard to gearmotors with a brake, it is necessary to consider the current value flowing through the brake as needed.
For more details, please contact your nearest Sales Office or the CS Center.

F Type 1-Phase High Voltage (200 V Class) <Right Angle Hollow Bore/FS>

Series	Power	Startup Method	Voltage (V)	Frequency (Hz)	Rated Current (A)	Startup Current (A)	Rated Speed (r/min)	Startup Torque (%)	Breakdown Torque (%)
MID	0.1 kW	Capacitor Run	200/200	50/60	0.82/0.96	2.10/2.00	1410/1700	65/81	163/178
	0.2 kW	Capacitor Start	200/200	50/60	2.5/2.2	10.0/10.0	1420/1700	254/250	203/205
	0.4 kW	Capacitor Start	200/200	50/60	4.3/3.9	19.0/18.0	1440/1730	181/190	240/217

The rated current in the motor characteristics table is the current data for the motor operating without a gearbox.
With regard to gearmotors with a brake, it is necessary to consider the current value flowing through the brake as needed.
For more details, please contact your nearest Sales Office or the CS Center.

FA Type 3-Phase Standard Voltage/High Voltage (400 V Class)/Special Voltage <Right Angle Hollow Bore/FAS>

Series	Power	Power Supply/ Certification Codes	Voltage (V)	Frequency (Hz)	Rated Current (A)	Startup Current (A)	Rated Speed (r/min)
MID	0.4 kW IE2	NN	200/200/220	50/60/60	2.1/1.8/1.8	9.60/8.54/9.21	1400/1680/1700
		WN	380/400/400/440	50/50/60/60	1.0/1.0/0.9/0.9	4.43/4.64/4.24/4.85	1390/1400/1680/1710
		KN	220/380	60/60	1.7/1.0	7.10/4.09	1670/1670
		CN	220/230/380	50/50/50	1.8/1.8/1.0	7.63/8.04/4.43	1390/1400/1390
		DN	220/220/380/380	50/60/50/60	1.8/1.7/1.0/1.0	7.63/7.10/4.43/4.09	1390/1670/1390/1670
		EN	415/440/480	50/50/60	0.96/0.95/0.82	4.45/4.56/4.52	1390/1410/1680
		AN	208/230/460/400	60/60/60/50	1.8/1.8/0.9/1.0	9.21/9.82/5.06/4.62	1680/1720/1720/1400
		MA	575	60	0.68	3.94	1700
	0.75 kW IE3	NN	200/200/220	50/60/60	3.5/3.2/3.1	21.8/19.0/21.1	1450/1740/1750
		WN	380/400/400/440	50/50/60/60	1.73/1.72/1.58/1.54	10.2/10.8/9.8/10.7	1440/1450/1740/1750
		KN	220/380	60/60	2.9/1.7	16.9/9.8	1740/1740
		CN	220/230/380	50/50/50	3.0/3.0/1.7	17.8/18.7/10.3	1450/1450/1440
		DN	220/220/380/380	50/60/50/60	3.1/2.9/1.8/1.7	19.3/16.9/11.2/9.8	1450/1740/1450/1740
		EN	415/440/480	50/50/60	1.54/1.52/1.36	8.6/9.3/9.0	1440/1450/1750
		UN	230/460/400	60/60/50	3.1/1.5/1.7	22.3/11.2/10.8	1760/1760/1450
		MA	575	60	1.16	7.2	1750
	1.5 kW IE3	NN	200/200/220	50/60/60	6.7/6.1/5.9	45.6/40.3/45.1	1450/1740/1760
		WN	380/400/400/440	50/50/60/60	3.4/3.4/3.1/3.0	21.9/23.2/20.4/22.8	1450/1450/1750/1760
		KN	220/380	60/60	5.9/3.4	45.1/25.8	1760/1760
		CN	220/230/380	50/50/50	5.9/5.9/3.4	38.5/40.4/22.1	1450/1450/1450
		EN	415/440/480	50/50/60	3.1/3.1/2.8	20.8/22.2/21.2	1450/1460/1760
		UN	230/460/400	60/60/50	5.9/2.9/3.3	44.9/22.6/23.2	1760/1760/1450
		MA	575	60	2.2	17.0	1760
	2.2 kW IE3	NN	200/200/220	50/60/60	9.3/8.6/8.2	70.3/56.9/63.7	1470/1760/1770
		WN	380/400/400/440	50/50/60/60	4.5/4.4/4.2/3.9	30.0/32.0/25.0/28.0	1440/1450/1740/1750
		KN	220/380	60/60	8.3/4.8	65.0/38.0	1770/1770
		CN	220/230/380	50/50/50	7.9/7.7/4.5	52.0/54.3/30.0	1460/1470/1440
		EN	415/440/480	50/50/60	4.3/4.3/3.8	33.1/35.5/29.8	1460/1470/1770
		UN	230/460/400	60/60/50	7.9/4.0/4.5	65.2/34.8/36.3	1770/1770/1470
		MA	575	60	3.3	24.4	1760

The rated current in the motor characteristics table is the current data for the motor operating without a gearbox.
With regard to gearmotors with a brake, it is necessary to consider the current value flowing through the brake as needed.
For more details, please contact your nearest Sales Office or the CS Center.

FA Type 1-Phase Standard Voltage <Right Angle Hollow Bore/FAS>

Series	Power	Startup Method	Voltage (V)	Frequency (Hz)	Rated Current (A)	Startup Current (A)	Rated Speed (r/min)	Startup Torque (%)	Breakdown Torque (%)
MID	0.4kW	Capacitor Run	100/100	50/60	8.7/7.9	32.0/32.0	1440/1730	210/205	189/178

The rated current in the motor characteristics table is the current data for the motor operating without a gearbox.
With regard to gearmotors with a brake, it is necessary to consider the current value flowing through the brake as needed.
For more details, please contact your nearest Sales Office or the CS Center.

FA Type 1-Phase High Voltage (200 V Class) <Right Angle Hollow Bore/FAS>

Series	Power	Startup Method	Voltage (V)	Frequency (Hz)	Rated Current (A)	Startup Current (A)	Rated Speed (r/min)	Startup Torque (%)	Breakdown Torque (%)
MID	0.4kW	Capacitor Run	200/200	50/60	4.3/3.9	19.0/18.0	1440/1730	181/190	240/217

The rated current in the motor characteristics table is the current data for the motor operating without a gearbox.
With regard to gearmotors with a brake, it is necessary to consider the current value flowing through the brake as needed.
For more details, please contact your nearest Sales Office or the CS Center.

F Type 3-Phase Standard Voltage/High Voltage (400 V Class)/Special Voltage <Right Angle Shaft/FF>

Series	Power	Power Supply/ Certification Codes	Voltage (V)	Frequency (Hz)	Rated Current (A)	Startup Current (A)	Rated Speed (r/min)
MID	0.1kW	NN	200/200/220	50/60/60	0.61/0.54/0.54	2.39/2.27/2.52	1410/1690/1710
		WN	380/400/400/440	50/50/60/60	0.31/0.31/0.28/0.28	1.12/1.18/1.12/1.22	1400/1410/1690/1720
		KN	220/380	60/60	0.52/0.30	1.90/1.10	1680/1680
		CN	220/230/380	50/50/50	0.55/0.54/0.31	1.94/2.03/1.12	1400/1410/1400
		DN	220/220/380/380	50/60/50/60	0.55/0.52/0.31/0.30	1.94/1.90/1.12/1.10	1400/1680/1400/1680
		EN	415/440/480	50/50/60	0.30/0.29/0.26	1.06/1.12/1.17	1390/1420/1720
		AN	208/230/460/400	60/60/60/50	0.54/0.57/0.29/0.31	2.35/2.62/1.26/1.21	1690/1730/1730/1410
		MA	575	60	0.20	0.87	1700
	0.2 kW IE2	NN	200/200/220	50/60/60	1.1/1.0/1.0	4.70/4.35/4.85	1400/1680/1700
		WN	380/400/400/440	50/50/60/60	0.56/0.56/0.50/0.50	2.29/2.38/2.29/2.48	1390/1400/1680/1710
		KN	220/380	60/60	0.93/0.52	3.70/2.20	1680/1680
		CN	220/230/380	50/50/50	0.99/0.98/0.56	3.97/4.15/2.29	1400/1410/1390
		DN	220/220/380/380	50/60/50/60	0.99/0.93/0.56/0.52	3.97/3.70/2.29/2.20	1400/1680/1390/1680
		EN	415/440/480	50/50/60	0.50/0.50/0.45	1.75/1.86/2.00	1370/1400/1700
		AN	208/230/460/400	60/60/60/50	1.0/1.0/0.50/0.56	4.78/5.16/2.56/2.44	1680/1720/1720/1400
		MA	575	60	0.40	1.78	1710
	0.4 kW IE2	NN	200/200/220	50/60/60	2.1/1.8/1.8	9.60/8.54/9.21	1400/1680/1700
		WN	380/400/400/440	50/50/60/60	1.0/1.0/0.9/0.9	4.43/4.64/4.24/4.85	1390/1400/1680/1710
		KN	220/380	60/60	1.7/1.0	7.10/4.09	1670/1670
		CN	220/230/380	50/50/50	1.8/1.8/1.0	7.63/8.04/4.43	1390/1400/1390
		DN	220/220/380/380	50/60/50/60	1.8/1.7/1.0/1.0	7.63/7.10/4.43/4.09	1390/1670/1390/1670
		EN	415/440/480	50/50/60	0.96/0.95/0.82	4.45/4.56/4.52	1390/1410/1680
		AN	208/230/460/400	60/60/60/50	1.8/1.8/0.9/1.0	9.21/9.82/5.06/4.62	1680/1720/1720/1400
		MA	575	60	0.68	3.94	1700
	0.75 kW IE3	NN	200/200/220	50/60/60	3.5/3.2/3.1	21.8/19.0/21.1	1450/1740/1750
		WN	380/400/400/440	50/50/60/60	1.73/1.72/1.58/1.54	10.2/10.8/9.8/10.7	1440/1450/1740/1750
		KN	220/380	60/60	2.9/1.7	16.9/9.8	1740/1740
		CN	220/230/380	50/50/50	3.0/3.0/1.7	17.8/18.7/10.3	1450/1450/1440
		DN	220/220/380/380	50/60/50/60	3.1/2.9/1.8/1.7	19.3/16.9/11.2/9.8	1450/1740/1450/1740
		EN	415/440/480	50/50/60	1.54/1.52/1.36	8.6/9.3/9.0	1440/1450/1750
		UN	230/460/400	60/60/50	3.1/1.5/1.7	22.3/11.2/10.8	1760/1760/1450
		MA	575	60	1.16	7.2	1750

The rated current in the motor characteristics table is the current data for the motor operating without a gearbox.
With regard to gearmotors with a brake, it is necessary to consider the current value flowing through the brake as needed.
For more details, please contact your nearest Sales Office or the CS Center.

1-2. Performance Table

F Type Gearmotors/Gearmotors with Brake <Right Angle Hollow Bore/FS>

[Notes]

- The values in parentheses ( ) in the drawings are the indications for gearmotors with brake.
- The output shaft speed is the value relative to the synchronous speed of the motor and the reduction ratio.
- The key for the output shaft is not included.
- In the performance table, ▭ indicates that the shaft rotates clockwise when viewed from the flange surface side when the connection is made as shown on page 547 (CW). (Refer to the figure on the right)
- Allowable output shaft O.H.L. is the value at 20 mm from the end of the output shaft.
- The "*" mark indicates a limited torque type. Please make sure to check the allowable output shaft torque in the performance table.

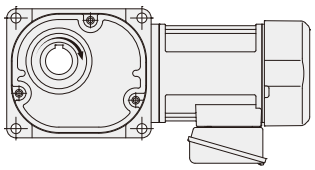

Motor Power	Frame Size	Reduction Ratio	Actual Reduction Ratio	Output Shaft Speed r/min		Allowable Output Shaft Torque N·m		Allowable Output Shaft O.H.L.	Allowable Output Shaft Thrust Load	Drawings
				50 Hz	60 Hz	50 Hz	60 Hz	N	N	
3-Phase 0.1 kW	25	1/10	1/10	150	180	5.2	4.3	1520	382	P.375
		1/12.5	2/25	120	144	6.5	5.4	1620	402	
		1/15	1/15	100	120	7.7	6.5	1720	431	
		1/20	1/20	75	90	11	8.6	1860	471	
		1/25	19/470	60	72	13	11	2010	500	
		1/30	1/30	50	60	16	13	2110	530	
		1/40	1/40	37.5	45	21	18	2300	579	
		1/50	1/50	30	36	25	22	2450	618	
		1/60	1/60	25	30	31	25	2550	637	
		1/80	1/80	18.8	22.5	39	32	2550	637	
		1/100	19/1880	15	18	49	41	2550	637	
		1/120	1/120	12.5	15	59	49	2550	637	
		1/160	1/160	9.4	11.3	78	66	2550	637	
		1/200	1/200	7.5	9	98	81	2550	637	
		* 1/240	1/240	6.3	7.5	101	98	2550	637	
	30	1/300	7/2040	5	6	131	110	3140	785	P.377
		1/375	133/47940	4	4.8	165	137	3140	785	
		1/450	7/3060	3.3	4	198	165	3140	785	
	35	1/600	7/4240	2.5	3	248	207	3630	912	P.379
		1/750	133/99640	2	2.4	311	259	3630	912	
		1/900	7/6360	1.7	2	372	311	3630	912	
		* 1/1200	7/8480	1.3	1.5	372	372	3630	912	
		* 1/1500	7/10600	1	1.2	372	372	3630	912	
3-Phase 0.2 kW	30	1/5	1/5	300	360	5.5	4.6	1520	382	P.377
		1/7.5	2/15	200	240	8.3	7	1760	441	
		1/10	1/10	150	180	11	9.2	1910	481	
		1/12.5	19/235	120	144	14	12	2060	520	
		1/15	1/15	100	120	17	14	2160	539	
		1/20	1/20	75	90	23	19	2400	598	
		1/25	1/25	60	72	27	24	2550	637	
		1/30	1/30	50	60	33	27	2650	667	
		1/40	1/40	37.5	45	44	37	2840	716	
		1/50	1/50	30	36	55	46	2990	745	
		1/60	1/60	25	30	67	55	3090	775	
		1/80	1/80	18.8	22.5	84	71	3090	775	
		1/100	19/1880	15	18	105	87	3140	785	
		1/120	1/120	12.5	15	126	105	3140	785	
		1/160	1/160	9.4	11.3	169	140	3140	785	
		* 1/200	1/200	7.5	9	184	175	3140	785	
		* 1/240	1/240	6.3	7.5	184	184	3140	785	
	35	1/300	7/2120	5	6	282	235	3630	912	P.379
		1/375	133/49820	4	4.8	353	294	3630	912	
		* 1/450	7/3180	3.3	4	372	353	3630	912	
	45	1/600	7/4240	2.5	3	534	446	5190	1275	P.381
		1/750	133/99640	2	2.4	668	557	5190	1275	
		* 1/900	7/6360	1.7	2	713	668	5190	1275	
		* 1/1200	7/8480	1.3	1.5	713	713	5190	1275	
		* 1/1500	7/10600	1	1.2	713	713	5190	1275	

Motor Power	Frame Size	Reduction Ratio	Actual Reduction Ratio	Output Shaft Speed r/min		Allowable Output Shaft Torque N·m		Allowable Output Shaft O.H.L.	Allowable Output Shaft Thrust Load	Drawings
				50 Hz	60 Hz	50 Hz	60 Hz	N	N	
3-Phase 0.4 kW	35	1/5	1/5	300	360	11	9.2	1960	490	P.379
		1/7.5	2/15	200	240	17	14	2250	569	
		1/10	1/10	150	180	23	19	2450	618	
		1/12.5	19/235	120	144	27	24	2600	647	
		1/15	1/15	100	120	33	27	2740	686	
		1/20	1/20	75	90	44	37	2990	745	
		1/25	1/25	60	72	55	46	3190	794	
		1/30	1/30	50	60	67	55	3280	824	
		1/40	1/40	37.5	45	88	74	3480	873	
		1/50	1/50	30	36	111	92	3480	873	
		1/60	1/60	25	30	133	111	3480	873	
		1/80	1/80	18.8	22.5	169	140	3480	873	
		1/100	19/1880	15	18	211	175	3530	883	
		1/120	1/120	12.5	15	253	211	3530	883	
		* 1/160	1/160	9.4	11.3	270	270	3630	912	
		* 1/200	1/200	7.5	9	270	270	3630	912	
		* 1/240	1/240	6.3	7.5	270	270	3630	912	
	45	1/300	7/2080	5	6	565	471	5190	1275	P.381
		1/375	133/48880	4	4.8	707	589	5190	1275	
		* 1/450	7/3120	3.3	4	713	707	5190	1275	
	55	* 1/600	49/28600	2.5	3	1030	891	9800	2452	P.383
		* 1/750	11/8320	2	2.4	1030	1030	9800	2452	
		* 1/900	7/6136	1.7	2	1030	1030	9800	2452	
		* 1/1200	49/57200	1.3	1.5	1030	1030	9800	2452	
		* 1/1500	11/16640	1	1.2	1030	1030	9800	2452	
3-Phase 0.75 kW	45	1/5	1/5	300	360	21	18	2940	735	P.381
		1/7.5	2/15	200	240	31	25	3330	834	
		1/10	1/10	150	180	41	34	3630	912	
		1/12.5	19/235	120	144	52	43	3920	980	
		1/15	1/15	100	120	63	52	4070	1030	
		1/20	1/20	75	90	83	70	4460	1079	
		1/25	1/25	60	72	104	86	4700	1177	
		1/30	1/30	50	60	124	104	4750	1177	
		1/40	1/40	37.5	45	166	138	4750	1177	
		1/50	1/50	30	36	208	173	4750	1177	
		1/60	1/60	25	30	249	208	4750	1177	
		1/80	1/80	18.8	22.5	316	263	4750	1177	
		1/100	19/1880	15	18	395	328	4750	1177	
		1/120	1/120	12.5	15	473	395	4750	1177	
		* 1/160	1/160	9.4	11.3	554	526	5190	1275	
		* 1/200	1/200	7.5	9	554	554	5190	1275	
		* 1/240	1/240	6.3	7.5	554	554	5190	1275	
	55	* 1/300	7/2120	5	6	1030	883	9800	2452	P.383
		* 1/375	1/371	4	4.8	1030	1030	9800	2452	
		* 1/450	7/3180	3.3	4	1030	1030	9800	2452	

Note 1: Please be sure to read the notes on page 365.

Motor Power	Frame Size	Reduction Ratio	Actual Reduction Ratio	Output Shaft Speed r/min		Allowable Output Shaft Torque N·m		Allowable Output Shaft O.H.L.	Allowable Output Shaft Thrust Load	Drawings
				50 Hz	60 Hz	50 Hz	60 Hz	N	N	
3-Phase 1.5 kW	55	1/5	1/5	300	360	41	34	4700	1177	P.383
		1/7.5	2/15	200	240	63	52	5340	1324	
		1/10	1/10	150	180	83	70	5780	1422	
		1/12.5	4/49	120	144	104	86	6130	1520	
		1/15	1/15	100	120	124	104	6320	1569	
		1/20	14/275	75	90	166	138	6320	1569	
		1/25	11/280	60	72	208	173	6320	1569	
		1/30	2/59	50	60	249	208	6320	1569	
		1/40	1/40	37.5	45	332	276	6320	1569	
		1/50	1/49	30	36	416	345	6320	1569	
		1/60	1/60	25	30	498	416	6320	1569	
		1/80	7/550	18.8	22.5	631	526	6420	1618	
		1/100	11/1120	15	18	789	658	6420	1618	
		1/120	1/118	12.5	15	947	789	7500	1863	
		* 1/160	7/1100	9.4	11.3	1030	1030	8330	2059	
		* 1/200	11/2240	7.5	9	1030	1030	9020	2256	
		* 1/240	1/236	6.3	7.5	1030	1030	9800	2452	
3-Phase 2.2 kW	55	1/5	1/5	300	360	61	51	4700	1177	P.383
		1/7.5	2/15	200	240	91	76	5340	1324	
		1/10	1/10	150	180	122	102	5780	1422	
		1/12.5	4/49	120	144	152	126	6130	1520	
		1/15	1/15	100	120	182	152	6320	1569	
		1/20	14/275	75	90	244	203	6320	1569	
		1/25	11/280	60	72	305	254	6320	1569	
		1/30	2/59	50	60	366	305	6320	1569	
		1/40	1/40	37.5	45	487	406	6320	1569	
		1/50	1/49	30	36	609	508	6320	1569	
		1/60	1/60	25	30	731	609	6320	1569	
		1/80	7/550	18.8	22.5	926	771	6420	1618	
		* 1/100	11/1120	15	18	1030	964	6420	1618	
		* 1/120	1/118	12.5	15	1030	1030	7500	1863	

Note 1: Please be sure to read the notes on page 365.

F Type Gearmotors/Gearmotors with Brake <Right Angle Hollow Bore/FS>

[Notes]

- The values in parentheses ( ) in the drawings are the indications for gearmotors with brake.
- The output shaft speed is the value relative to the synchronous speed of the motor and the reduction ratio.
- The key for the output shaft is not included.
- In the performance table, ▭ indicates that the shaft rotates clockwise when viewed from the flange surface side when the connection is made as shown on page 548 (CW). (Refer to the figure on the right)
- The startup torque of the single-phase 0.1 kW motor is 60 to 80 % because a capacitor run motor is adopted.
- Allowable output shaft O.H.L. is the value at 20 mm from the end of the output shaft.
- The "*" mark indicates a limited torque type. Please make sure to check the allowable output shaft torque in the performance table.

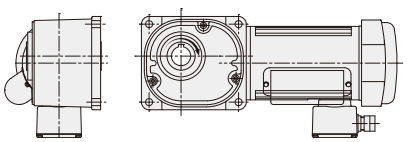

Motor Power	Frame Size	Reduction Ratio	Actual Reduction Ratio	Output Shaft Speed r/min		Allowable Output Shaft Torque N·m		Allowable Output Shaft O.H.L.	Allowable Output Shaft Thrust Load	Drawings
				50 Hz	60 Hz	50 Hz	60 Hz	N	N	
1-Phase 0.1 kW	25	1/10	1/10	150	180	5.2	4.3	1520	382	P.376
		1/12.5	2/25	120	144	6.5	5.4	1620	402	
		1/15	1/15	100	120	7.7	6.5	1720	431	
		1/20	1/20	75	90	11	8.6	1860	471	
		1/25	19/470	60	72	13	11	2010	500	
		1/30	1/30	50	60	16	13	2110	530	
		1/40	1/40	37.5	45	21	18	2300	579	
		1/50	1/50	30	36	25	22	2450	618	
		1/60	1/60	25	30	31	25	2550	637	
		1/80	1/80	18.8	22.5	39	32	2550	637	
		1/100	19/1880	15	18	49	41	2550	637	
		1/120	1/120	12.5	15	59	49	2550	637	
		1/160	1/160	9.4	11.3	78	66	2550	637	
		1/200	1/200	7.5	9	98	81	2550	637	
		* 1/240	1/240	6.3	7.5	101	98	2550	637	
1-Phase 0.2 kW	30	1/5	1/5	300	360	5.5	4.6	1520	382	P.378
		1/7.5	2/15	200	240	8.3	7	1760	441	
		1/10	1/10	150	180	11	9.2	1910	481	
		1/12.5	19/235	120	144	14	12	2060	520	
		1/15	1/15	100	120	17	14	2160	539	
		1/20	1/20	75	90	23	19	2400	598	
		1/25	1/25	60	72	27	24	2550	637	
		1/30	1/30	50	60	33	27	2650	667	
		1/40	1/40	37.5	45	44	37	2840	716	
		1/50	1/50	30	36	55	46	2990	745	
		1/60	1/60	25	30	67	55	3090	775	
		1/80	1/80	18.8	22.5	84	71	3090	775	
		1/100	19/1880	15	18	105	87	3140	785	
		1/120	1/120	12.5	15	126	105	3140	785	
		1/160	1/160	9.4	11.3	169	140	3140	785	
		* 1/200	1/200	7.5	9	184	175	3140	785	
		* 1/240	1/240	6.3	7.5	184	184	3140	785	
	35	1/300	7/2120	5	6	282	235	3630	912	P.380
		1/375	133/49820	4	4.8	353	294	3630	912	
		* 1/450	7/3180	3.3	4	372	353	3630	912	
	45	1/600	7/4240	2.5	3	534	446	5190	1275	P.382
		1/750	133/99640	2	2.4	668	557	5190	1275	
		* 1/900	7/6360	1.7	2	713	668	5190	1275	
		* 1/1200	7/8480	1.3	1.5	713	713	5190	1275	
		* 1/1500	7/10600	1	1.2	713	713	5190	1275	

Motor Power	Frame Size	Reduction Ratio	Actual Reduction Ratio	Output Shaft Speed r/min		Allowable Output Shaft Torque N·m		Allowable Output Shaft O.H.L.	Allowable Output Shaft Thrust Load	Drawings
				50 Hz	60 Hz	50 Hz	60 Hz	N	N	
1-Phase 0.4 kW	35	1/5	1/5	300	360	11	9.2	1960	490	P.380
		1/7.5	2/15	200	240	17	14	2250	569	
		1/10	1/10	150	180	23	19	2450	618	
		1/12.5	19/235	120	144	27	24	2600	647	
		1/15	1/15	100	120	33	27	2740	686	
		1/20	1/20	75	90	44	37	2990	745	
		1/25	1/25	60	72	55	46	3190	794	
		1/30	1/30	50	60	67	55	3280	824	
		1/40	1/40	37.5	45	88	74	3480	873	
		1/50	1/50	30	36	111	92	3480	873	
		1/60	1/60	25	30	133	111	3480	873	
		1/80	1/80	18.8	22.5	169	140	3480	873	
		1/100	19/1880	15	18	211	175	3530	883	
		1/120	1/120	12.5	15	253	211	3530	883	
		* 1/160	1/160	9.4	11.3	270	270	3630	912	
		* 1/200	1/200	7.5	9	270	270	3630	912	
		* 1/240	1/240	6.3	7.5	270	270	3630	912	
	45	1/300	7/2080	5	6	565	471	5190	1275	P.382
		1/375	133/48880	4	4.8	707	589	5190	1275	
		* 1/450	7/3120	3.3	4	713	707	5190	1275	
	55	* 1/600	49/28600	2.5	3	1030	891	9800	2452	P.384
		* 1/750	11/8320	2	2.4	1030	1030	9800	2452	
		* 1/900	7/6136	1.7	2	1030	1030	9800	2452	
		* 1/1200	49/57200	1.3	1.5	1030	1030	9800	2452	
		* 1/1500	11/16640	1	1.2	1030	1030	9800	2452	

FA Type Gearmotors/Gearmotors with Brake <Right Angle Hollow Bore/FAS>

[Notes]

- The values in parentheses ( ) in the drawings are the indications for gearmotors with brake.
- The output shaft speed is the value relative to the synchronous speed of the motor and the reduction ratio.
- The key for the output shaft is not included.
- In the performance table, ▭ indicates that the shaft rotates clockwise when viewed from the flange surface side when the connection is made as shown on page 547 (CW). (Refer to the figure on the right)
- Allowable output shaft O.H.L. is the value at 20 mm from the end of the output shaft.
- The "*" mark indicates a limited torque type. Please make sure to check the allowable output shaft torque in the performance table.

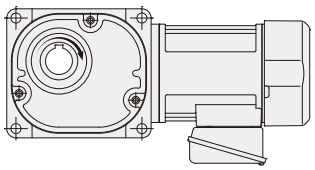

Motor Power	Frame Size	Reduction Ratio	Actual Reduction Ratio	Output Shaft Speed r/min		Allowable Output Shaft Torque N·m		Allowable Output Shaft O.H.L.	Allowable Output Shaft Thrust Load	Drawings
				50 Hz	60 Hz	50 Hz	60 Hz	N	N	
3-Phase 0.4kW	55	* 1/600	49/28600	2.5	3	1030	891	9800	2452	P.385
		* 1/750	11/8320	2	2.4	1030	1030	9800	2452	
		* 1/900	7/6136	1.7	2	1030	1030	9800	2452	
		* 1/1200	49/57200	1.3	1.5	1030	1030	9800	2452	
		* 1/1500	11/16640	1	1.2	1030	1030	9800	2452	
3-Phase 0.75kW	55	* 1/300	7/2120	5	6	1030	883	9800	2452	P.385
		* 1/375	1/371	4	4.8	1030	1030	9800	2452	
		* 1/450	7/3180	3.3	4	1030	1030	9800	2452	
3-Phase 1.5kW	55	1/5	1/5	300	360	41	34	4700	1177	P.385
		1/7.5	2/15	200	240	63	52	5340	1324	
		1/10	1/10	150	180	83	70	5780	1422	
		1/12.5	4/49	120	144	104	86	6130	1520	
		1/15	1/15	100	120	124	104	6320	1569	
		1/20	14/275	75	90	166	138	6320	1569	
		1/25	11/280	60	72	208	173	6320	1569	
		1/30	2/59	50	60	249	208	6320	1569	
		1/40	1/40	37.5	45	332	276	6320	1569	
		1/50	1/49	30	36	416	345	6320	1569	
		1/60	1/60	25	30	498	416	6320	1569	
		1/80	7/550	18.8	22.5	631	526	6420	1618	
		1/100	11/1120	15	18	789	658	6420	1618	
		1/120	1/118	12.5	15	947	789	7500	1863	
		* 1/160	7/1100	9.4	11.3	1030	1030	8330	2059	
		* 1/200	11/2240	7.5	9	1030	1030	9020	2256	
		* 1/240	1/236	6.3	7.5	1030	1030	9800	2452	

Motor Power	Frame Size	Reduction Ratio	Actual Reduction Ratio	Output Shaft Speed r/min		Allowable Output Shaft Torque N·m		Allowable Output Shaft O.H.L.	Allowable Output Shaft Thrust Load	Drawings
				50 Hz	60 Hz	50 Hz	60 Hz	N	N	
3-Phase 2.2kW	55	1/5	1/5	300	360	61	51	4700	1177	P.385
		1/7.5	2/15	200	240	91	76	5340	1324	
		1/10	1/10	150	180	122	102	5780	1422	
		1/12.5	4/49	120	144	152	126	6130	1520	
		1/15	1/15	100	120	182	152	6320	1569	
		1/20	14/275	75	90	244	203	6320	1569	
		1/25	11/280	60	72	305	254	6320	1569	
		1/30	2/59	50	60	366	305	6320	1569	
		1/40	1/40	37.5	45	487	406	6320	1569	
		1/50	1/49	30	36	609	508	6320	1569	
		1/60	1/60	25	30	731	609	6320	1569	
		1/80	7/550	18.8	22.5	926	771	6420	1618	
		* 1/100	11/1120	15	18	1030	964	6420	1618	
		* 1/120	1/118	12.5	15	1030	1030	7500	1863	

Note 1: Please be sure to read the notes on page 370.

FA Type Gearmotors/Gearmotors with Brake <Right Angle Hollow Bore/FAS>

[Notes]

- The values in parentheses ( ) in the drawings are the indications for gearmotors with brake.
- The output shaft speed is the value relative to the synchronous speed of the motor and the reduction ratio.
- The key for the output shaft is not included.
- In the performance table, ▭ indicates that the shaft rotates clockwise when viewed from the flange surface side when the connection is made as shown on page 548 (CW). (Refer to the figure on the right)
- Allowable output shaft O.H.L. is the value at 20 mm from the end of the output shaft.
- The "*" mark indicates a limited torque type. Please make sure to check the allowable output shaft torque in the performance table.

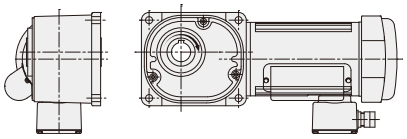

Motor Power	Frame Size	Reduction Ratio	Actual Reduction Ratio	Output Shaft Speed r/min		Allowable Output Shaft Torque N·m		Allowable Output Shaft O.H.L.	Allowable Output Shaft Thrust Load	Drawings
				50 Hz	60 Hz	50 Hz	60 Hz	N	N	
1-Phase 0.4kW	55	* 1/600	49/28600	2.5	3	1030	891	9800	2452	P.386
		* 1/750	11/8320	2	2.4	1030	1030	9800	2452	
		* 1/900	7/6136	1.7	2	1030	1030	9800	2452	
		* 1/1200	49/57200	1.3	1.5	1030	1030	9800	2452	
		* 1/1500	11/16640	1	1.2	1030	1030	9800	2452	

F Type Gearmotors/Gearmotors with Brake <Right Angle Shaft/FF>

[Notes]

- The values in parentheses ( ) in the drawings are the indications for gearmotors with brake.
- The output shaft speed is the value relative to the synchronous speed of the motor and the reduction ratio.
- In the performance table, ▭ indicates that the L shaft rotates clockwise and the R and T shafts rotate counterclockwise when viewed from the output shaft direction when the connection is made as shown on page 547 (CW). (Refer to the figure on the right)
- Allowable output shaft O.H.L. is the value at the middle of the output shaft.
- The "*" mark indicates a limited torque type. Please make sure to check the allowable output shaft torque in the performance table.

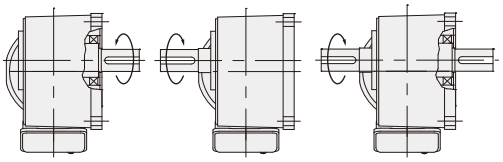

L Shaft R Shaft T Shaft

Motor Power	Frame Size	Reduction Ratio	Actual Reduction Ratio	Output Shaft Speed r/min		Allowable Output Shaft Torque N·m		Allowable Output Shaft O.H.L.	Drawings
				50 Hz	60 Hz	50 Hz	60 Hz	N	
0.1 kW	22	1/10	1/10	150	180	5.2	4.3	1520	P.387
		1/12.5	2/25	120	144	6.5	5.4	1620	
		1/15	1/15	100	120	7.7	6.5	1720	
		1/20	1/20	75	90	11	8.6	1910	
		1/25	19/470	60	72	13	11	2060	
		1/30	1/30	50	60	16	13	2160	
		1/40	1/40	37.5	45	21	18	2400	
		1/50	1/50	30	36	25	22	2550	
		1/60	1/60	25	30	31	25	2550	
		1/80	1/80	18.8	22.5	39	32	2550	
		1/100	19/1880	15	18	49	41	2550	
		1/120	1/120	12.5	15	59	49	2550	
		1/160	1/160	9.4	11.3	78	66	2550	
		1/200	1/200	7.5	9	98	81	2550	
		* 1/240	1/240	6.3	7.5	101	98	2550	
0.2 kW	28	1/5	1/5	300	360	5.5	4.6	1470	P.387
		1/7.5	2/15	200	240	8.3	7.0	1670	
		1/10	1/10	150	180	11	9.2	1810	
		1/12.5	19/235	120	144	14	12	1960	
		1/15	1/15	100	120	17	14	2060	
		1/20	1/20	75	90	23	19	2300	
		1/25	1/25	60	72	27	24	2450	
		1/30	1/30	50	60	33	27	2600	
		1/40	1/40	37.5	45	44	37	2790	
		1/50	1/50	30	36	55	46	2990	
		1/60	1/60	25	30	67	55	3090	
		1/80	1/80	18.8	22.5	84	71	3090	
		1/100	19/1880	15	18	105	87	3140	
		1/120	1/120	12.5	15	126	105	3140	
		1/160	1/160	9.4	11.3	169	140	3140	
		* 1/200	1/200	7.5	9	184	175	3140	
		* 1/240	1/240	6.3	7.5	184	184	3140	

Motor Power	Frame Size	Reduction Ratio	Actual Reduction Ratio	Output Shaft Speed r/min		Allowable Output Shaft Torque N·m		Allowable Output Shaft O.H.L.	Drawings
				50 Hz	60 Hz	50 Hz	60 Hz	N	
0.4 kW	32	1/5	1/5	300	360	11	9.2	1760	P.388
		1/7.5	2/15	200	240	17	14	2010	
		1/10	1/10	150	180	23	19	2210	
		1/12.5	19/235	120	144	27	24	2350	
		1/15	1/15	100	120	33	27	2500	
		1/20	1/20	75	90	44	37	2700	
		1/25	1/25	60	72	55	46	2890	
		1/30	1/30	50	60	67	55	3040	
		1/40	1/40	37.5	45	88	74	3280	
		1/50	1/50	30	36	111	92	3330	
		1/60	1/60	25	30	133	111	3330	
		1/80	1/80	18.8	22.5	169	140	3330	
		1/100	19/1880	15	18	211	175	3380	
		1/120	1/120	12.5	15	253	211	3380	
		* 1/160	1/160	9.4	11.3	270	270	3580	
		* 1/200	1/200	7.5	9	270	270	3630	
		* 1/240	1/240	6.3	7.5	270	270	3630	
0.75 kW	40	1/5	1/5	300	360	21	18	2500	P.388
		1/7.5	2/15	200	240	31	25	2840	
		1/10	1/10	150	180	41	34	3140	
		1/12.5	19/235	120	144	52	43	3380	
		1/15	1/15	100	120	63	52	3530	
		1/20	1/20	75	90	83	70	3870	
		1/25	1/25	60	72	104	86	4170	
		1/30	1/30	50	60	124	104	4310	
		1/40	1/40	37.5	45	166	138	4460	
		1/50	1/50	30	36	208	173	4460	
		1/60	1/60	25	30	249	208	4460	
		1/80	1/80	18.8	22.5	316	263	4460	
		1/100	19/1880	15	18	395	328	4460	
		1/120	1/120	12.5	15	473	395	4460	
		* 1/160	1/160	9.4	11.3	554	526	4850	
		* 1/200	1/200	7.5	9	554	554	5190	
		* 1/240	1/240	6.3	7.5	554	554	5190	

1-3. Drawings

FS Type Right Angle Hollow Bore | Shaft Diameter **25** | **Flange** Mounting

The values in parentheses ( ) are the indications for gearmotors with brake.

<Figure 1>

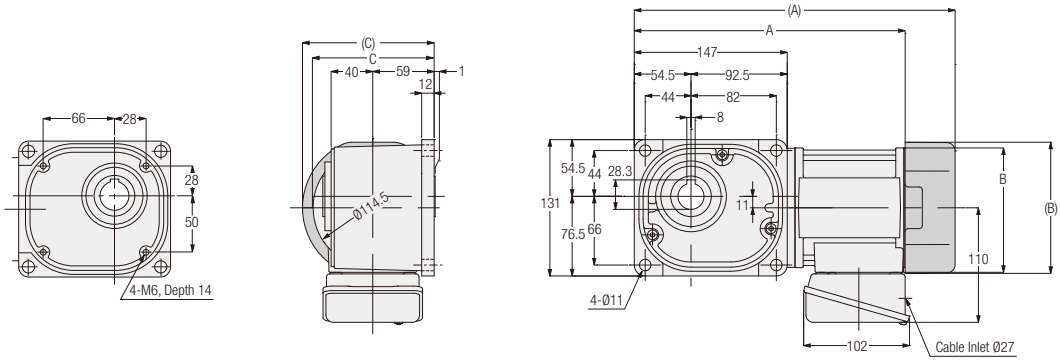

Number of Phases	Power	Part Number	Reduction Ratio	Figure Number	Brake	Approx. Weight (kg)	A	B	C
3-Phase	0.1 kW	FS25N✱✱✱-MM01T◇◇TN	10, 12.5, 15, 20, 25, 30, 40, 50, 60, 80, 100, 120, 160, 200, 240	1	No	7.5	268.5	Ø115	116.5
		FS25N✱✱✱-MM01T◇◇TB◆			Yes	9	308.5	□126	126.5

Note: The reduction ratio will be indicated as ✱✱✱ in the nomenclature. Supply voltage/certification codes are indicated as ◇◇ and brake specification is indicated as ◆.
Note: When the reduction ratio is 12.5, “12” will be indicated as ✱✱✱ in the nomenclature.
Note: Please refer to page 982 for the details of the output shaft dimensions.
Note: Please refer to page 365 for the performance table.

FS Type Right Angle Hollow Bore | Shaft Diameter 25 | Flange Mounting

<Figure 1>

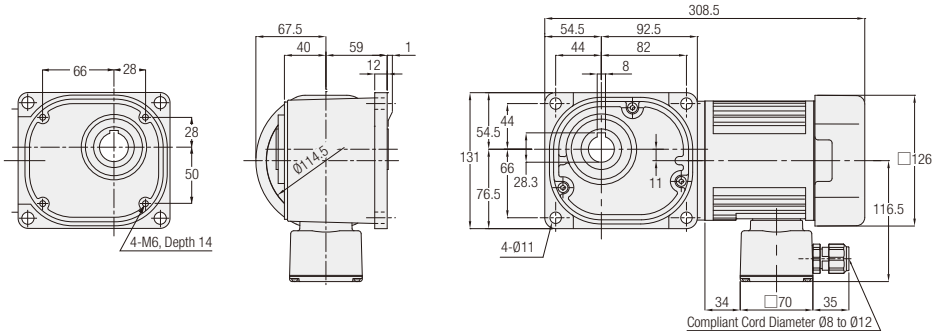

<Figure 2>

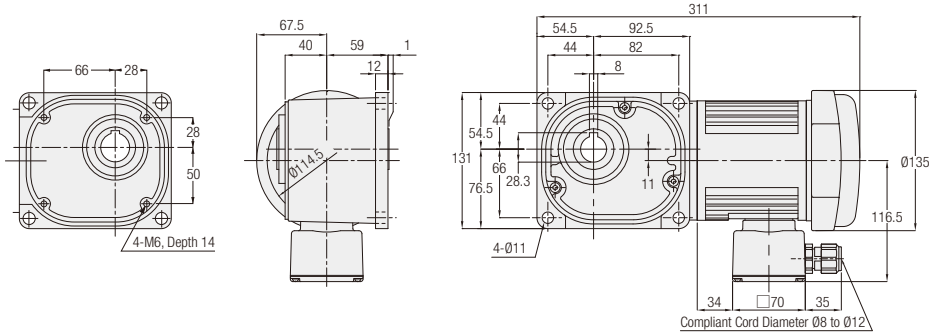

Number of Phases	Power	Part Number	Reduction Ratio	Figure Number	Brake	Approx. Weight (kg)
1-Phase	0.1 kW	FS25N✱✱✱-MM01S◇JAN	10, 12.5, 15, 20, 25, 30, 40, 50, 60, 80, 100, 120, 160, 200, 240	1	No	8
		FS25N✱✱✱-MM01S◇JAB2		2	Yes	8

Note: The reduction ratio will be indicated as ✱✱✱ in the nomenclature. Supply voltage code will be indicated as ◇.
Note: When the reduction ratio is 12.5, “12” will be indicated as ✱✱✱ in the nomenclature.
Note: Please refer to page 982 for the details of the output shaft dimensions.
Note: Please refer to page 368 for the performance table.

FS Type Right Angle Hollow Bore | Shaft Diameter **30** | **Flange** Mounting

The values in parentheses ( ) are the indications for gearmotors with brake.

<Figure 1>

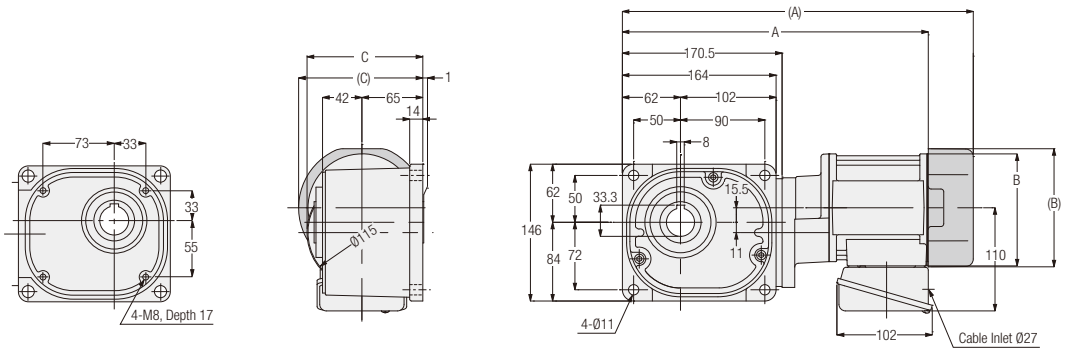

<Figure 2>

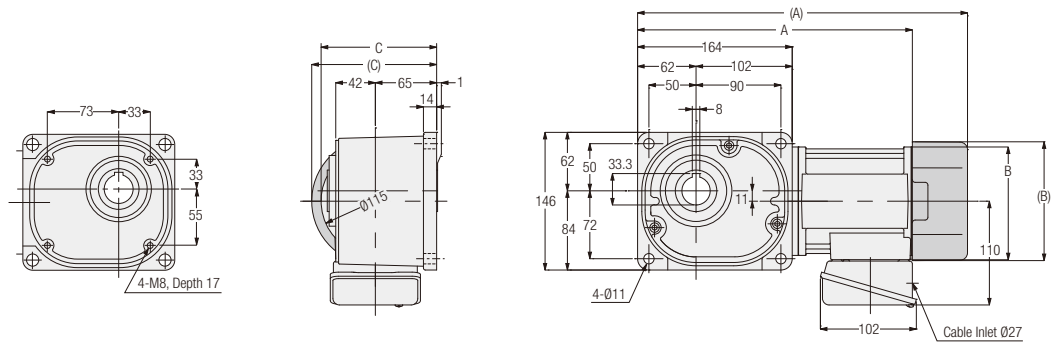

Number of Phases	Power	Part Number	Reduction Ratio	Figure Number	Brake	Approx. Weight (kg)	A	B	C
3-Phase	0.1 kW	FS30N✱✱✱-MM01T◇◇TN	300, 375, 450	1	No	11.5	334.5	Ø115	123
		FS30N✱✱✱-MM01T◇◇TB◆			Yes	13	374.5	□126	132.5
	0.2 kW	FS30N✱✱✱-MM02T◇◇TN	5, 7.5, 10, 12.5, 15, 20, 25, 30, 40, 50, 60, 80, 100, 120, 160, 200, 240	2	No	9.5	299.5	Ø115	123
		FS30N✱✱✱-MM02T◇◇TB◆			Yes	11	350	□126	132.5

Note: The reduction ratio will be indicated as ✱✱✱ in the nomenclature. Supply voltage/certification codes are indicated as ◇◇ and brake specification is indicated as ◆.
Note: When the reduction ratio is 7.5, "7" will be indicated as ✱✱✱ in the nomenclature, and when the reduction ratio is 12.5, "12" will be indicated as ✱✱✱ in the nomenclature.
Note: Please refer to page 982 for the details of the output shaft dimensions.
Note: Please refer to page 365 for the performance table.

FS Type Right Angle Hollow Bore | Shaft Diameter 30 | Flange Mounting

<Figure 1>

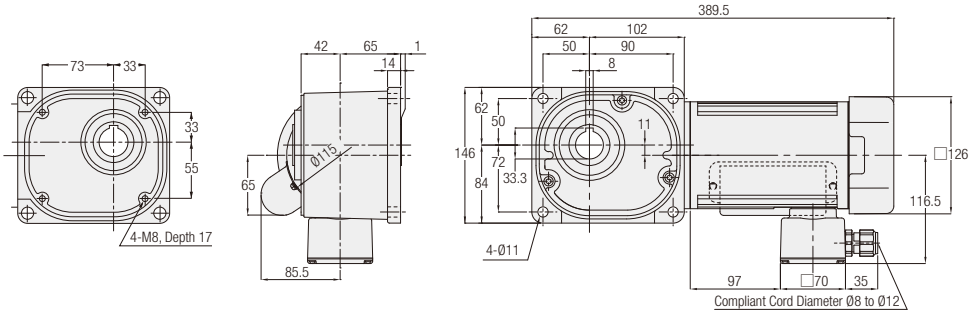

<Figure 2>

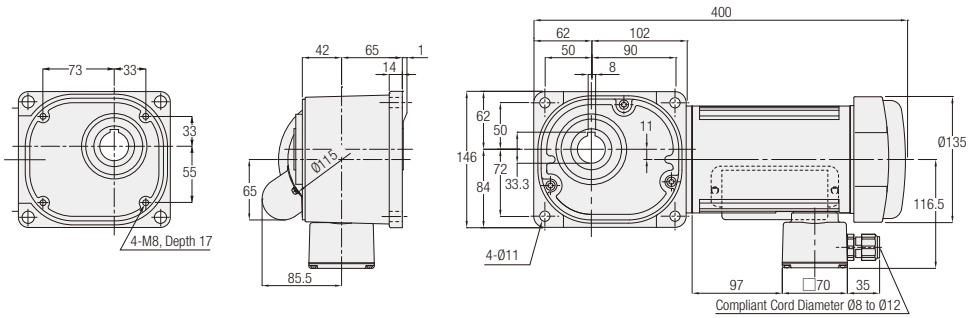

Number of Phases	Power	Part Number	Reduction Ratio	Figure Number	Brake	Approx. Weight (kg)
1-Phase	0.2 kW	FS30N✱✱✱-MM02C◇JAN	5, 7.5, 10, 12.5, 15, 20, 25, 30, 40, 50, 60, 80, 100, 120, 160, 200, 240	1	No	9.5
		FS30N✱✱✱-MM02C◇JAB2		2	Yes	9.5

Note: The reduction ratio will be indicated as ✱✱✱ in the nomenclature. Supply voltage code will be indicated as ◇.
Note: When the reduction ratio is 7.5, “7” will be indicated as ✱✱✱ in the nomenclature, and when the reduction ratio is 12.5, “12” will be indicated as ✱✱✱ in the nomenclature.
Note: Please refer to page 982 for the details of the output shaft dimensions.
Note: Please refer to page 368 for the performance table.

FS Type Right Angle Hollow Bore | Shaft Diameter 35 | **Flange** Mounting

The values in parentheses ( ) are the indications for gearmotors with brake.

<Figure 1>

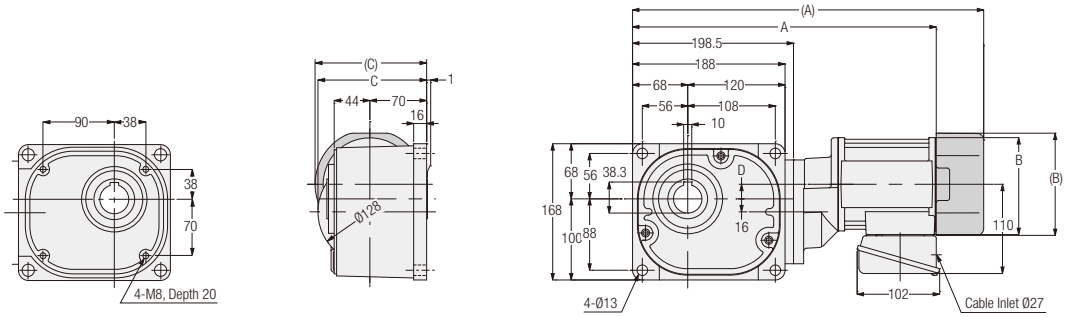

<Figure 2>

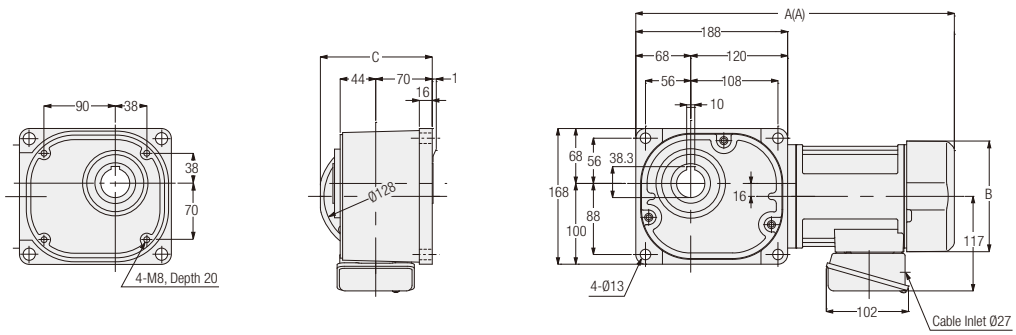

Number of Phases	Power	Part Number	Reduction Ratio	Figure Number	Brake	Approx. Weight (kg)	A	B	C	D
3-Phase	0.1 kW	FS35N✱✱✱-MM01T◇◇TN	600, 750, 900, 1200, 1500	1	No	13.5	362.5	Ø115	134	11.5
		FS35N✱✱✱-MM01T◇◇TB◆			Yes	15	402.5	□126	137.5	11.5
	0.2 kW	FS35N✱✱✱-MM02T◇◇TN	300, 375, 450	1	No	14.5	382.5	Ø115	134	18
		FS35N✱✱✱-MM02T◇◇TB◆			Yes	16	433	□126	137.5	18
	0.4 kW	FS35N✱✱✱-MM04T◇◇TN	5, 7.5, 10, 12.5, 15, 20, 25, 30, 40, 50, 60, 80, 100, 120, 160, 200, 240	2	No	14	374.5	□137	138.5	-
		FS35N✱✱✱-MM04T◇◇TB◆			Yes	16	394.5	□137	138.5	-

Note: The reduction ratio will be indicated as ✱✱✱ in the nomenclature. Supply voltage/certification codes are indicated as ◇◇ and brake specification is indicated as ◆.
Note: When the reduction ratio is 7.5, "7" will be indicated as ✱✱✱ in the nomenclature, and when the reduction ratio is 12.5, "12" will be indicated as ✱✱✱ in the nomenclature.
Note: Please refer to page 982 for the details of the output shaft dimensions.
Note: Please refer to page 365 for the performance table.

FS Type Right Angle Hollow Bore | Shaft Diameter **35** | **Flange** Mounting

The values in parentheses ( ) are the indications for gearmotors with brake.

<Figure 1>

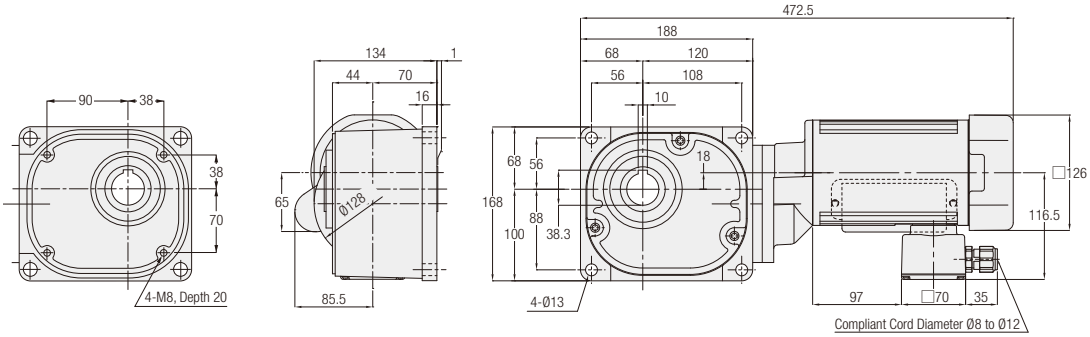

<Figure 2>

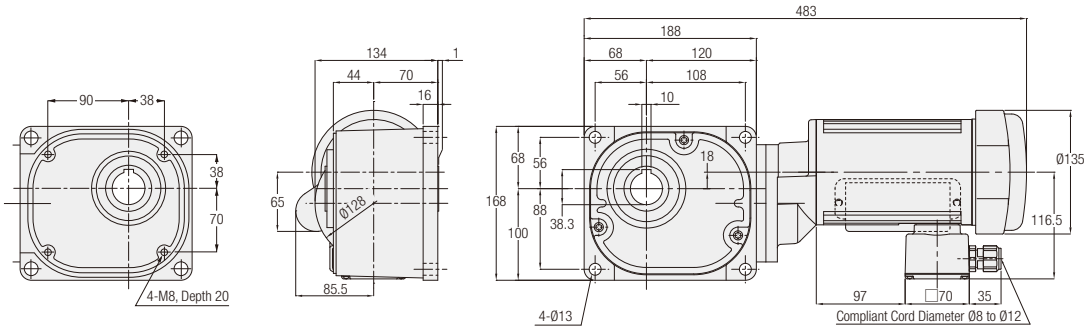

<Figure 3>

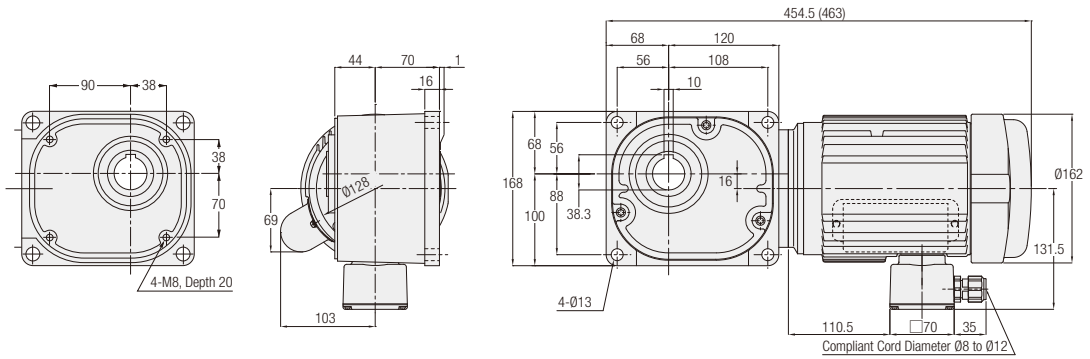

Number of Phases	Power	Part Number	Reduction Ratio	Figure Number	Brake	Approx. Weight (kg)
1-Phase	0.2 kW	FS35N***-MM02C◇JAN	300, 375, 450	1	No	16.5
		FS35N***-MM02C◇JAB2		2	Yes	16.5
	0.4 kW	FS35N***-MM04C◇JAN	5, 7.5, 10, 12.5, 15, 20, 25, 30, 40, 50, 60, 80, 100, 120, 160, 200, 240	3	No	20
		FS35N***-MM04C◇JAB2			Yes	20

Note: The reduction ratio will be indicated as *** in the nomenclature. Supply voltage code will be indicated as ◇.
Note: When the reduction ratio is 7.5, “7” will be indicated as *** in the nomenclature, and when the reduction ratio is 12.5, “12” will be indicated as *** in the nomenclature.
Note: Please refer to page 982 for the details of the output shaft dimensions.
Note: Please refer to page 368 for the performance table.

FS Type Right Angle Hollow Bore | Shaft Diameter **45** | **Flange** Mounting

The values in parentheses ( ) are the indications for gearmotors with brake.

<Figure 1>

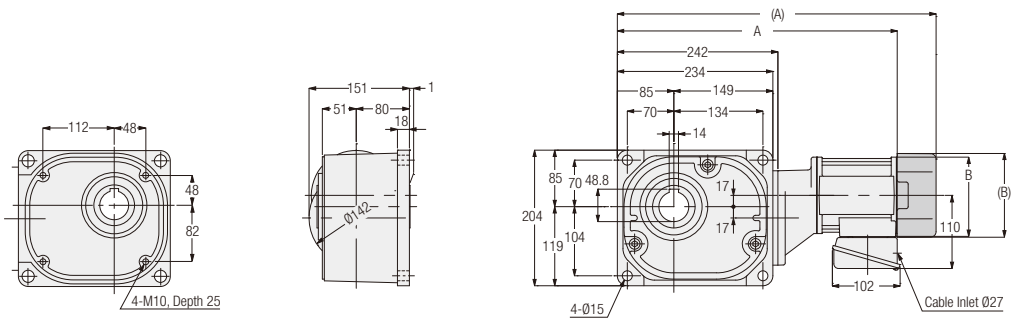

<Figure 2>

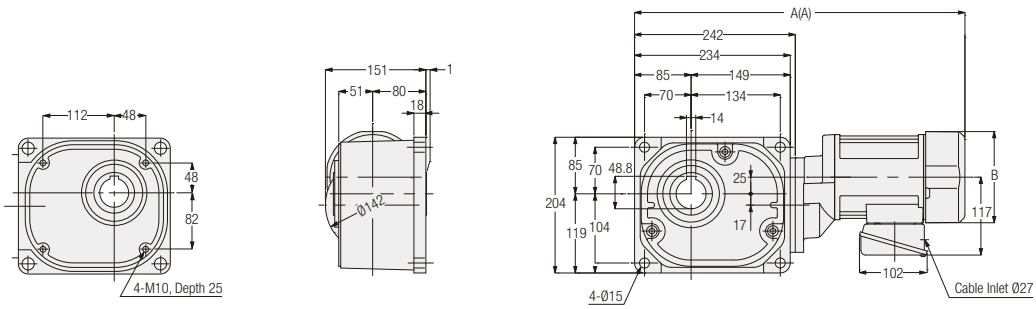

<Figure 3>

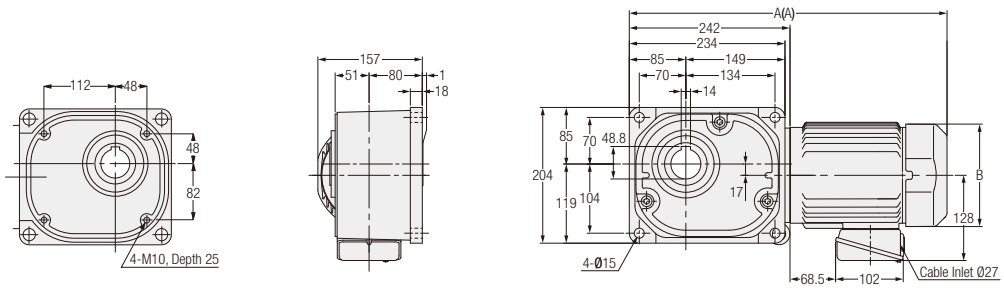

Number of Phases	Power	Part Number	Reduction Ratio	Figure Number	Brake	Approx. Weight (kg)	A	B
3-Phase	0.2 kW	FS45N✱✱✱-MM02T◇◇TN	600, 750, 900, 1200, 1500	1	No	20	429.5	Ø115
		FS45N✱✱✱-MM02T◇◇TB◆			Yes	21.5	480	□126
	0.4 kW	FS45N✱✱✱-MM04T◇◇TN	300, 375, 450	2	No	22.5	477	□137
		FS45N✱✱✱-MM04T◇◇TB◆			Yes	24	497	□137
	0.75 kW	FS45N✱✱✱-MR08T◇◇TN	5, 7.5, 10, 12.5, 15, 20, 25, 30, 40, 50, 60, 80, 100, 120, 160, 200, 240	3	No	27.5	459	□154
		FS45N✱✱✱-MR08T◇◇TB◆			Yes	30.5	478	□154

Note: The reduction ratio will be indicated as ✱✱✱ in the nomenclature. Supply voltage/certification codes are indicated as ◇◇ and brake specification is indicated as ◆.
Note: When the reduction ratio is 7.5, "7" will be indicated as ✱✱✱ in the nomenclature, and when the reduction ratio is 12.5, "12" will be indicated as ✱✱✱ in the nomenclature.
Note: Please refer to page 982 for the details of the output shaft dimensions.
Note: Please refer to page 365 for the performance table.

FS Type Right Angle Hollow Bore | Shaft Diameter **45** | **Flange** Mounting

The values in parentheses ( ) are the indications for gearmotors with brake.

<Figure 1>

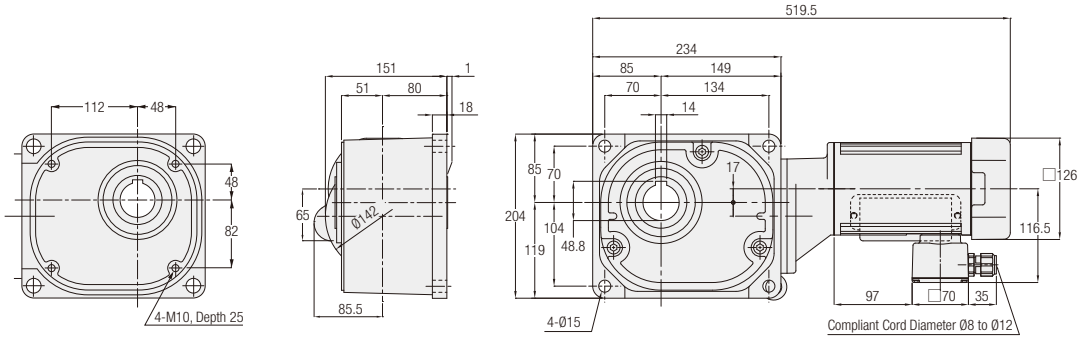

<Figure 2>

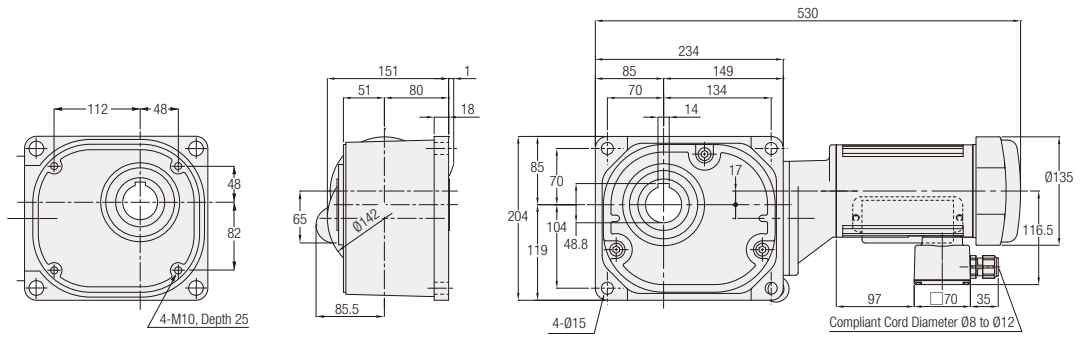

<Figure 3>

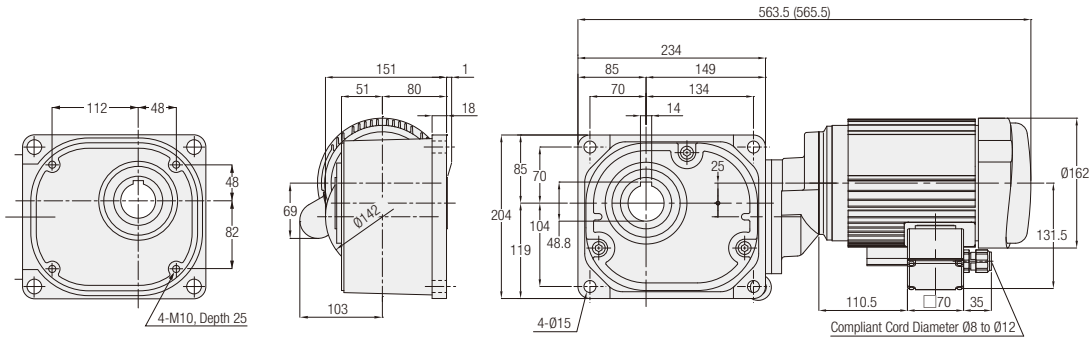

Number of Phases	Power	Part Number	Reduction Ratio	Figure Number	Brake	Approx. Weight (kg)
1-Phase	0.2 kW	FS45N***-MM02C◇JAN	600, 750, 900, 1200, 1500	1	No	22
		FS45N***-MM02C◇JAB2		2	Yes	22
	0.4 kW	FS45N***-MM04C◇JAN	300, 375, 450	3	No	28
		FS45N***-MM04C◇JAB2			Yes	28

Note: The reduction ratio will be indicated as *** in the nomenclature. Supply voltage code will be indicated as ◇.
Note: Please refer to page 982 for the details of the output shaft dimensions.
Note: Please refer to page 368 for the performance table.

FS Type Right Angle Hollow Bore | Shaft Diameter **55** | **Flange** Mounting

The values in parentheses ( ) are the indications for gearmotors with brake.

<Figure 1>

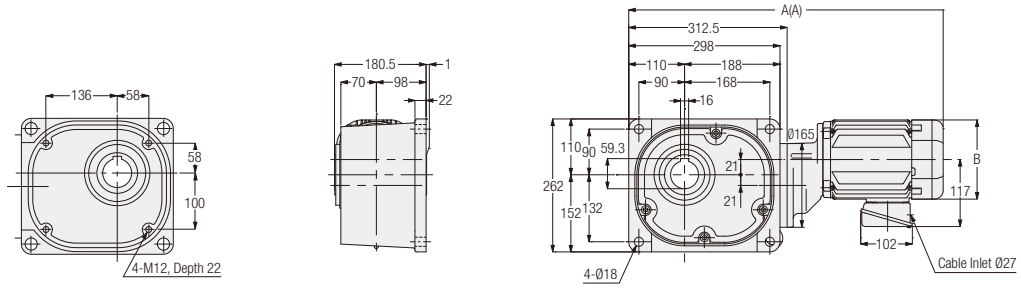

<Figure 2>

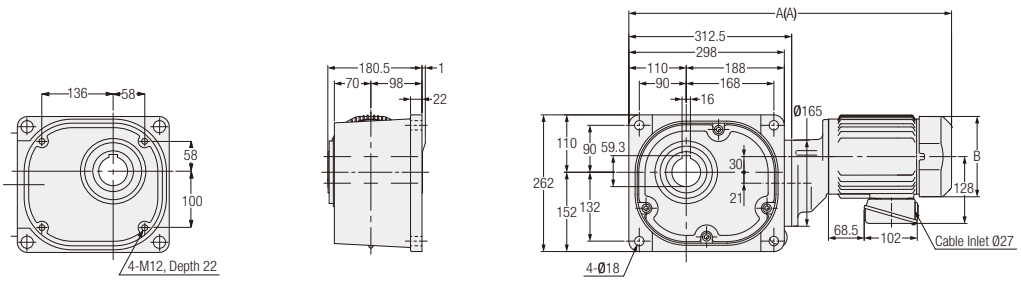

<Figure 3>

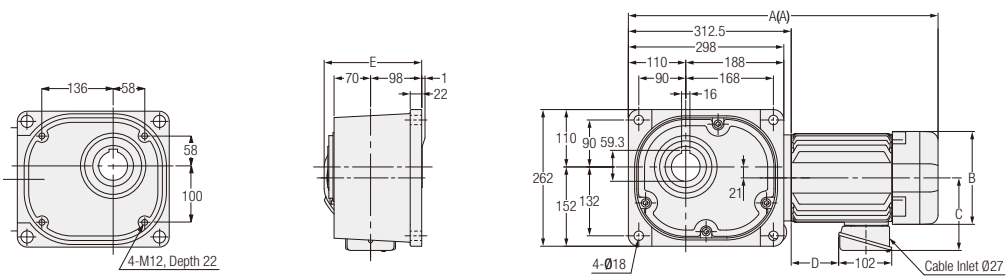

Number of Phases	Power	Part Number	Reduction Ratio	Figure Number	Brake	Approx. Weight (kg)	A	B	C	D	E
3-Phase	0.4 kW	FS55N✱✱✱-MM04T◇◇TN	600, 750, 900, 1200, 1500	1	No	60.5	547.5	□137	-	-	-
		FS55N✱✱✱-MM04T◇◇TB◆			Yes	62	567.5	□137	-	-	-
	0.75 kW	FS55N✱✱✱-MR08T◇◇TN	300, 375, 450	2	No	68.5	600	□154	-	-	-
		FS55N✱✱✱-MR08T◇◇TB◆			Yes	71	619	□154	-	-	-
	1.5 kW	FS55N✱✱✱-MR15T◇◇TN	5, 7.5, 10, 12.5, 15, 20, 25, 30, 40, 50, 60, 80, 100, 120, 160, 200, 240	3	No	74.5	565	□178	139	91	187
		FS55N✱✱✱-MR15T◇◇TB◆			Yes	77.5	594	□178	139	91	187
	2.2 kW	FS55N✱✱✱-MR22T◇◇TN	5, 7.5, 10, 12.5, 15, 20, 25, 30, 40, 50, 60, 80, 100, 120	3	No	85	614.5	□192	149	140	194
		FS55N✱✱✱-MR22T◇◇TB◆			Yes	88	643.5	□192	149	140	194

Note: The reduction ratio will be indicated as ✱✱✱ in the nomenclature. Supply voltage/certification codes are indicated as ◇◇ and brake specification is indicated as ◆.
Note: When the reduction ratio is 7.5, "7" will be indicated as ✱✱✱ in the nomenclature, and when the reduction ratio is 12.5, "12" will be indicated as ✱✱✱ in the nomenclature.
Note: Please refer to page 982 for the details of the output shaft dimensions.
Note: Please refer to page 366 for the performance table.

FS Type Right Angle Hollow Bore | Shaft Diameter **55** | **Flange** Mounting

The values in parentheses ( ) are the indications for gearmotors with brake.

<Figure 1>

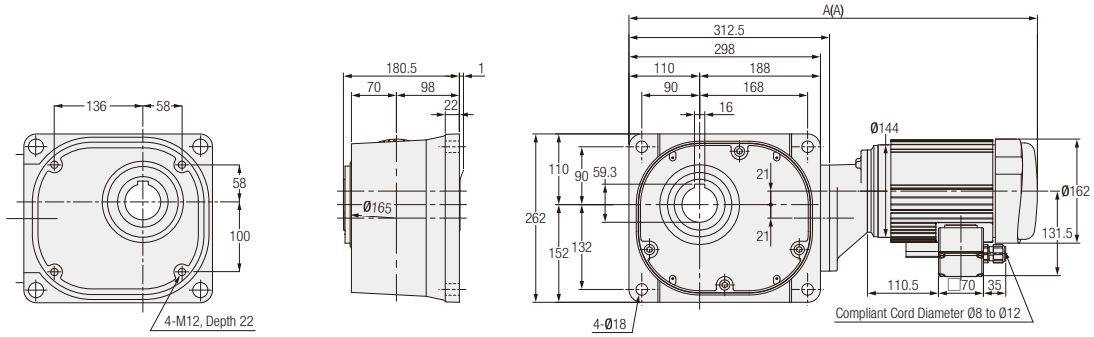

Number of Phases	Power	Part Number	Reduction Ratio	Figure Number	Brake	Approx. Weight (kg)	A
1-Phase	0.4 kW	FS55N✱✱✱-MM04C◇JAN	600, 750, 900, 1200, 1500	1	No	66	627.5
		FS55N✱✱✱-MM04C◇JAB2			Yes	66	636

Note: The reduction ratio will be indicated as ✱✱✱ in the nomenclature. Supply voltage code will be indicated as ◇.
Note: Please refer to page 982 for the details of the output shaft dimensions.
Note: Please refer to page 369 for the performance table.

FAS Type Right Angle Hollow Bore | Shaft Diameter 55 | **Flange** Mounting

The values in parentheses ( ) are the indications for gearmotors with brake.

<Figure 1>

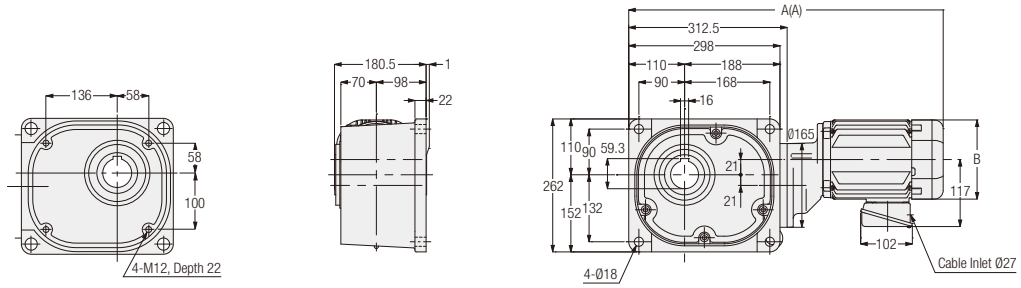

<Figure 2>

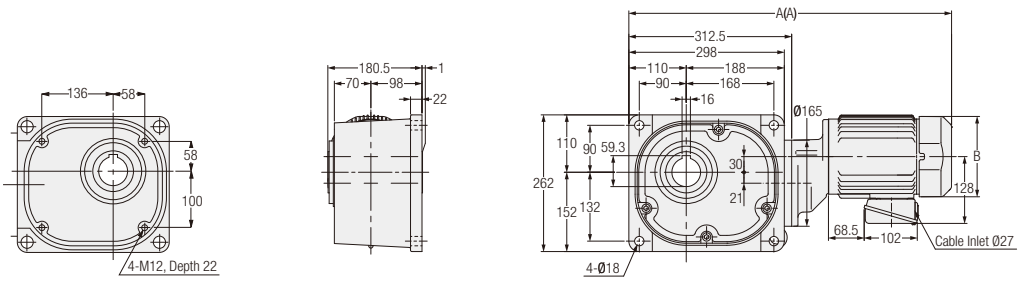

<Figure 3>

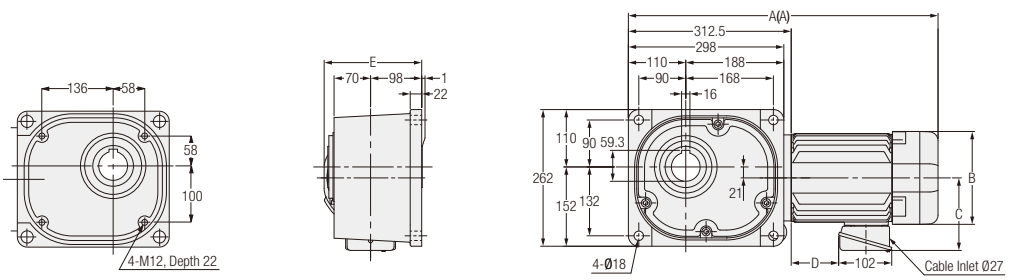

Number of Phases	Power	Part Number	Reduction Ratio	Figure Number	Brake	Approx. Weight (kg)	A	B	C	D	E
3-Phase	0.4kW	FAS55N✱✱✱-MM04T◇◇TN	600, 750, 900, 1200, 1500	1	No	42.7	547.5	□137	-	-	-
		FAS55N✱✱✱-MM04T◇◇TB◆			Yes	44.2	567.5	□137	-	-	-
	0.75kW	FAS55N✱✱✱-MR08T◇◇TN	300, 375, 450	2	No	50.7	600	□154	-	-	-
		FAS55N✱✱✱-MR08T◇◇TB◆			Yes	53.2	619	□154	-	-	-
	1.5kW	FAS55N✱✱✱-MR15T◇◇TN	5, 7.5, 10, 12.5, 15, 20, 25, 30, 40, 50, 60, 80, 100, 120, 160, 200, 240	3	No	56.7	565	□178	139	91	187
		FAS55N✱✱✱-MR15T◇◇TB◆			Yes	59.7	594	□178	139	91	187
	2.2kW	FAS55N✱✱✱-MR22T◇◇TN	5, 7.5, 10, 12.5, 15, 20, 25, 30, 40, 50, 60, 80, 100, 120	3	No	67.2	614.5	□192	149	140	194
		FAS55N✱✱✱-MR22T◇◇TB◆			Yes	70.2	643.5	□192	149	140	194

Note: The reduction ratio will be indicated as ✱✱✱ in the nomenclature. Supply voltage/certification codes are indicated as ◇◇ and brake specification is indicated as ◆.
Note: When the reduction ratio is 7.5, "7" will be indicated as ✱✱✱ in the nomenclature, and when the reduction ratio is 12.5, "12" will be indicated as ✱✱✱ in the nomenclature.
Note: Please refer to page 982 for the details of the output shaft dimensions.
Note: Please refer to page 370 for the performance table.

FAS Type Right Angle Hollow Bore | Shaft Diameter **55** | **Flange** Mounting

The values in parentheses ( ) are the indications for gearmotors with brake.

<Figure 1>

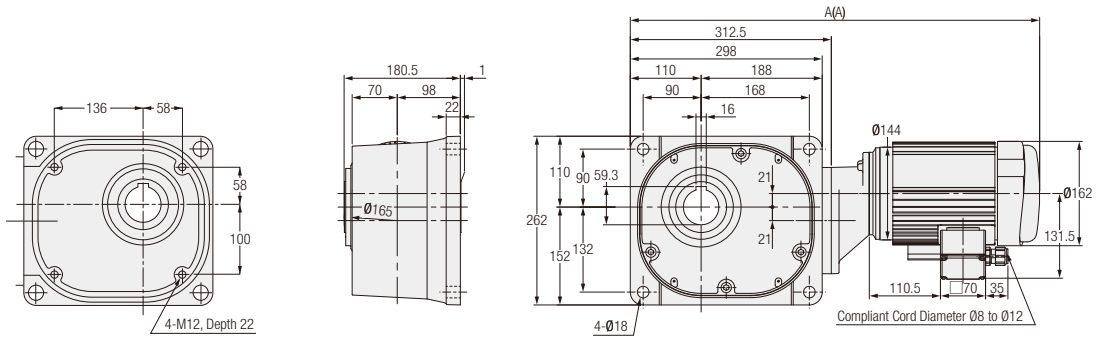

Number of Phases	Power	Part Number	Reduction Ratio	Figure Number	Brake	Approx. Weight (kg)	A
1-Phase	0.4kW	FAS55N***-MM04C◇JAN	600, 750, 900, 1200, 1500	1	No	48.2	627.5
		FAS55N***-MM04C◇JAB2			Yes	48.2	636

Note: The reduction ratio will be indicated as *** in the nomenclature. Supply voltage code will be indicated as ◇.
Note: Please refer to page 982 for the details of the output shaft dimensions.
Note: Please refer to page 372 for the performance table.

FF Type Right Angle Shaft | Shaft Diameter **22** | **Flange** Mounting

The values in parentheses ( ) are the indications for gearmotors with brake.

<Figure 1>

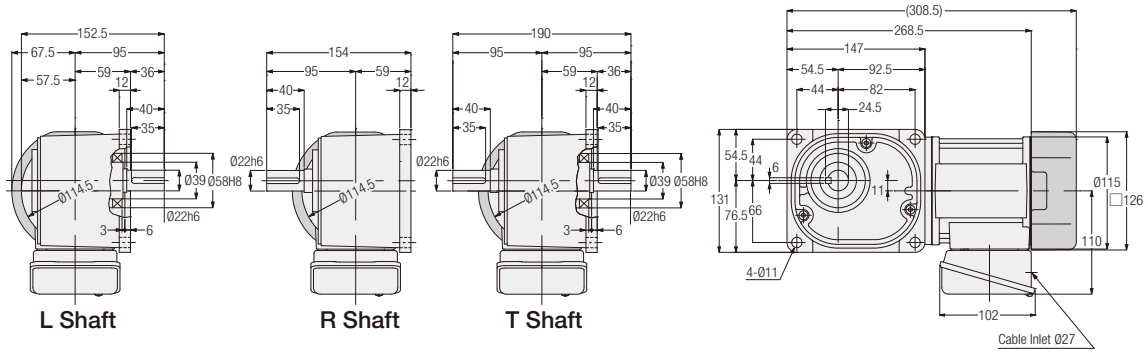

Number of Phases	Power	Part Number	Reduction Ratio	Figure Number	Brake	Approx. Weight (kg)
3-Phase	0.1 kW	FF22#✱✱✱-MM01T◇◇TN	10, 12.5, 15, 20, 25, 30, 40, 50, 60, 80, 100, 120, 160, 200, 240	1	No	8.5
		FF22#✱✱✱-MM01T◇◇TB◆			Yes	10

Note: A shaft arrangement (L, R, T) will be indicated as # in the nomenclature. In addition, a reduction ratio is indicated as ✱✱✱. Supply voltage/certification codes are indicated as ◇◇ and brake specification is indicated as ◆.
Note: When the reduction ratio is 12.5, "12" will be indicated as ✱✱✱ in the nomenclature.
Note: Please refer to page 373 for the performance table.

FF Type Right Angle Shaft | Shaft Diameter **28** | **Flange** Mounting

<Figure 2>

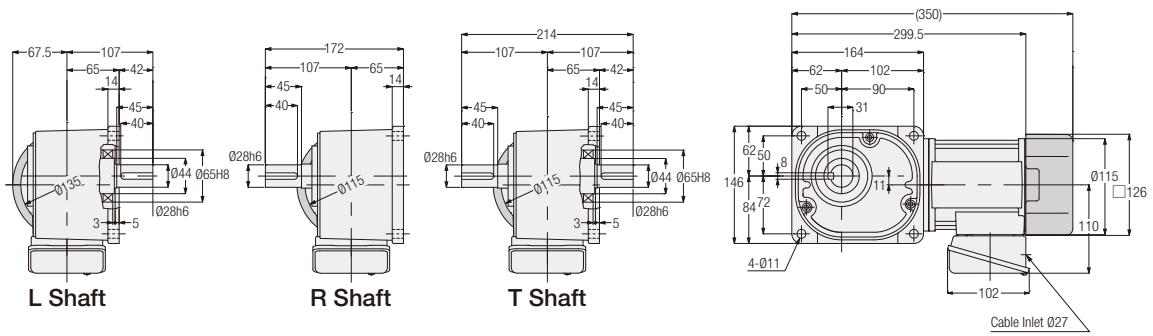

Number of Phases	Power	Part Number	Reduction Ratio	Figure Number	Brake	Approx. Weight (kg)
3-Phase	0.2 kW	FF28#✱✱✱-MM02T◇◇TN	5, 7.5, 10, 12.5, 15, 20, 25, 30, 40, 50, 60, 80, 100, 120, 160, 200, 240	2	No	10.5
		FF28#✱✱✱-MM02T◇◇TB◆			Yes	12

Note: A shaft arrangement (L, R, T) will be indicated as # in the nomenclature. In addition, a reduction ratio is indicated as ✱✱✱. Supply voltage/certification codes are indicated as ◇◇ and brake specification is indicated as ◆.
Note: When the reduction ratio is 7.5, "7" will be indicated as ✱✱✱ in the nomenclature, and when the reduction ratio is 12.5, "12" will be indicated as ✱✱✱ in the nomenclature.
Note: Please refer to page 373 for the performance table.

FF Type Right Angle Shaft | Shaft Diameter 32 | Flange Mounting

The values in parentheses ( ) are the indications for gearmotors with brake.

<Figure 1>

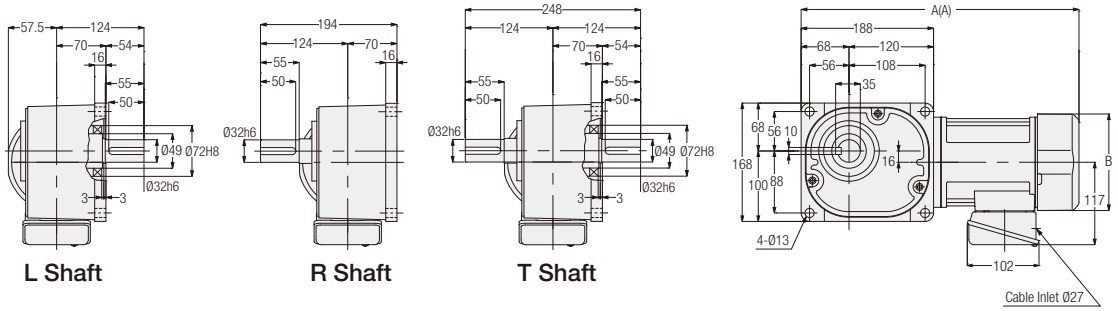

Number of Phases	Power	Part Number	Reduction Ratio	Figure Number	Brake	Approx. Weight (kg)	A	B
3-Phase	0.4 kW	FF32#✱✱✱-MM04T◇◇TN	5, 7.5, 10, 12.5, 15, 20, 25, 30, 40, 50, 60, 80, 100, 120, 160, 200, 240	1	No	16	374.5	□137
		FF32#✱✱✱-MM04T◇◇TB◆			Yes	18	394.5	□137

Note: A shaft arrangement (L, R, T) will be indicated as # in the nomenclature. In addition, a reduction ratio is indicated as ✱✱✱. Supply voltage/certification codes are indicated as ◇◇ and brake specification is indicated as ◆.

Note: When the reduction ratio is 7.5, “7” will be indicated as ✱✱✱ in the nomenclature, and when the reduction ratio is 12.5, “12” will be indicated as ✱✱✱ in the nomenclature.

Note: Please refer to page 374 for the performance table.

FF Type Right Angle Shaft | Shaft Diameter 40 | Flange Mounting

<Figure 2>

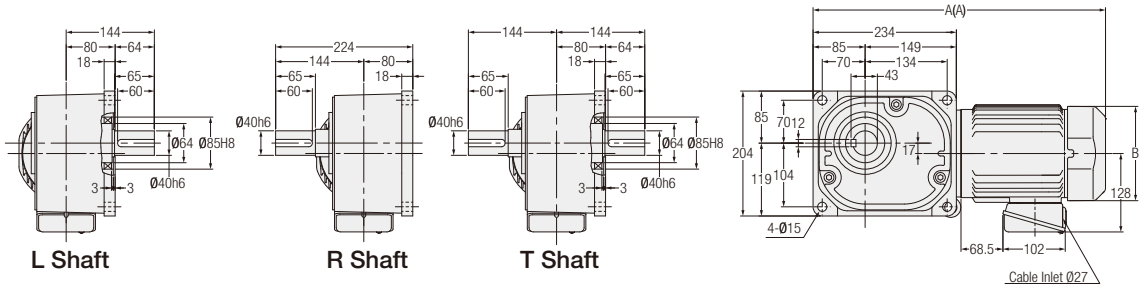

Number of Phases	Power	Part Number	Reduction Ratio	Figure Number	Brake	Approx. Weight (kg)	A	B
3-Phase	0.75 kW	FF40#✱✱✱-MR08T◇◇TN	5, 7.5, 10, 12.5, 15, 20, 25, 30, 40, 50, 60, 80, 100, 120, 160, 200, 240	2	No	31.5	459	□154
		FF40#✱✱✱-MR08T◇◇TB◆			Yes	34.5	478	□154

Note: A shaft arrangement (L, R, T) will be indicated as # in the nomenclature. In addition, a reduction ratio is indicated as ✱✱✱. Supply voltage/certification codes are indicated as ◇◇ and brake specification is indicated as ◆.

Note: When the reduction ratio is 7.5, “7” will be indicated as ✱✱✱ in the nomenclature, and when the reduction ratio is 12.5, “12” will be indicated as ✱✱✱ in the nomenclature

Note: Please refer to page 374 for the performance table.

MEMO

2. IP65 Gearmotors
IP65 Gearmotors with Brake

2-1. Motor Characteristics Table

F Type 3-Phase Standard Voltage <Right Angle Hollow Bore/FS>

Series	Power	Power Supply/ Certification Codes	Voltage (V)	Frequency (Hz)	Rated Current (A)	Startup Current (A)	Rated Speed (r/min)
MID	0.1kW	NN	200/200/220	50/60/60	0.61/0.54/0.54	2.39/2.27/2.52	1410/1690/1710
		WN	380/400/400/440	50/50/60/60	0.31/0.31/0.28/0.28	1.12/1.18/1.12/1.22	1400/1410/1690/1720
		KN	220/380	60/60	0.52/0.30	1.90/1.10	1680/1680
		CN	220/230/380	50/50/50	0.55/0.54/0.31	1.94/2.03/1.12	1400/1410/1400
		DN	220/220/380/380	50/60/50/60	0.55/0.52/0.31/0.30	1.94/1.90/1.12/1.10	1400/1680/1400/1680
		EN	415/440/480	50/50/60	0.30/0.29/0.26	1.06/1.12/1.17	1390/1420/1720
		AN	208/230/460/400	60/60/60/50	0.54/0.57/0.29/0.31	2.35/2.62/1.26/1.21	1690/1730/1730/1410
		MA	575	60	0.20	0.87	1700
	0.2 kW IE2	NN	200/200/220	50/60/60	1.1/1.0/1.0	4.70/4.35/4.85	1400/1680/1700
		WN	380/400/400/440	50/50/60/60	0.56/0.56/0.50/0.50	2.29/2.38/2.29/2.48	1390/1400/1680/1710
		KN	220/380	60/60	0.93/0.52	3.70/2.20	1680/1680
		CN	220/230/380	50/50/50	0.99/0.98/0.56	3.97/4.15/2.29	1400/1410/1390
		DN	220/220/380/380	50/60/50/60	0.99/0.93/0.56/0.52	3.97/3.70/2.29/2.20	1400/1680/1390/1680
		EN	415/440/480	50/50/60	0.50/0.50/0.45	1.75/1.86/2.00	1370/1400/1700
		AN	208/230/460/400	60/60/60/50	1.0/1.0/0.50/0.56	4.78/5.16/2.56/2.44	1680/1720/1720/1400
		MA	575	60	0.40	1.78	1710
	0.4 kW IE2	NN	200/200/220	50/60/60	2.1/1.8/1.8	9.60/8.54/9.21	1400/1680/1700
		WN	380/400/400/440	50/50/60/60	1.0/1.0/0.9/0.9	4.43/4.64/4.24/4.85	1390/1400/1680/1710
		KN	220/380	60/60	1.7/1.0	7.10/4.09	1670/1670
		CN	220/230/380	50/50/50	1.8/1.8/1.0	7.63/8.04/4.43	1390/1400/1390
		DN	220/220/380/380	50/60/50/60	1.8/1.7/1.0/1.0	7.63/7.10/4.43/4.09	1390/1670/1390/1670
		EN	415/440/480	50/50/60	0.96/0.95/0.82	4.45/4.56/4.52	1390/1410/1680
		AN	208/230/460/400	60/60/60/50	1.8/1.8/0.9/1.0	9.21/9.82/5.06/4.62	1680/1720/1720/1400
		MA	575	60	0.68	3.94	1700
	0.75 kW IE3	NN	200/200/220	50/60/60	3.5/3.2/3.1	21.8/19.0/21.1	1450/1740/1750
		WN	380/400/400/440	50/50/60/60	1.73/1.72/1.58/1.54	10.2/10.8/9.8/10.7	1440/1450/1740/1750
		KN	220/380	60/60	2.9/1.7	16.9/9.8	1740/1740
		CN	220/230/380	50/50/50	3.0/3.0/1.7	17.8/18.7/10.3	1450/1450/1440
		DN	220/220/380/380	50/60/50/60	3.1/2.9/1.8/1.7	19.3/16.9/11.2/9.8	1450/1740/1450/1740
		EN	415/440/480	50/50/60	1.54/1.52/1.36	8.6/9.3/9.0	1440/1450/1750
		UN	230/460/400	60/60/50	3.1/1.5/1.7	22.3/11.2/10.8	1760/1760/1450
		MA	575	60	1.16	7.2	1750
	1.5 kW IE3	NN	200/200/220	50/60/60	6.7/6.1/5.9	45.6/40.3/45.1	1450/1740/1760
		WN	380/400/400/440	50/50/60/60	3.4/3.4/3.1/3.0	21.9/23.2/20.4/22.8	1450/1450/1750/1760
		KN	220/380	60/60	5.9/3.4	45.1/25.8	1760/1760
		CN	220/230/380	50/50/50	5.9/5.9/3.4	38.5/40.4/22.1	1450/1450/1450
		EN	415/440/480	50/50/60	3.1/3.1/2.8	20.8/22.2/21.2	1450/1460/1760
		UN	230/460/400	60/60/50	5.9/2.9/3.3	44.9/22.6/23.2	1760/1760/1450
		MA	575	60	2.2	17.0	1760
	2.2 kW IE3	NN	200/200/220	50/60/60	9.3/8.6/8.2	70.3/56.9/63.7	1470/1760/1770
		WN	380/400/400/440	50/50/60/60	4.5/4.4/4.2/3.9	30.0/32.0/25.0/28.0	1440/1450/1740/1750
		KN	220/380	60/60	8.3/4.8	65.0/38.0	1770/1770
		CN	220/230/380	50/50/50	7.9/7.7/4.5	52.0/54.3/30.0	1460/1470/1440
		EN	415/440/480	50/50/60	4.3/4.3/3.8	33.1/35.5/29.8	1460/1470/1770
		UN	230/460/400	60/60/50	7.9/4.0/4.5	65.2/34.8/36.3	1770/1770/1470
		MA	575	60	3.3	24.4	1760

The rated current in the motor characteristics table is the current data for the motor operating without a gearbox.
With regard to gearmotors with a brake, it is necessary to consider the current value flowing through the brake as needed.
For more details, please contact your nearest Sales Office or the CS Center.

FA Type 3-Phase Standard Voltage <Right Angle Hollow Bore/FAS>

Series	Power	Power Supply/ Certification Codes	Voltage (V)	Frequency (Hz)	Rated Current (A)	Startup Current (A)	Rated Speed (r/min)
MID	0.4 kW IE2	NN	200/200/220	50/60/60	2.1/1.8/1.8	9.60/8.54/9.21	1400/1680/1700
		WN	380/400/400/440	50/50/60/60	1.0/1.0/0.9/0.9	4.43/4.64/4.24/4.85	1390/1400/1680/1710
		KN	220/380	60/60	1.7/1.0	7.10/4.09	1670/1670
		CN	220/230/380	50/50/50	1.8/1.8/1.0	7.63/8.04/4.43	1390/1400/1390
		DN	220/220/380/380	50/60/50/60	1.8/1.7/1.0/1.0	7.63/7.10/4.43/4.09	1390/1670/1390/1670
		EN	415/440/480	50/50/60	0.96/0.95/0.82	4.45/4.56/4.52	1390/1410/1680
		AN	208/230/460/400	60/60/60/50	1.8/1.8/0.9/1.0	9.21/9.82/5.06/4.62	1680/1720/1720/1400
		MA	575	60	0.68	3.94	1700
	0.75 kW IE3	NN	200/200/220	50/60/60	3.5/3.2/3.1	21.8/19.0/21.1	1450/1740/1750
		WN	380/400/400/440	50/50/60/60	1.73/1.72/1.58/1.54	10.2/10.8/9.8/10.7	1440/1450/1740/1750
		KN	220/380	60/60	2.9/1.7	16.9/9.8	1740/1740
		CN	220/230/380	50/50/50	3.0/3.0/1.7	17.8/18.7/10.3	1450/1450/1440
		DN	220/220/380/380	50/60/50/60	3.1/2.9/1.8/1.7	19.3/16.9/11.2/9.8	1450/1740/1450/1740
		EN	415/440/480	50/50/60	1.54/1.52/1.36	8.6/9.3/9.0	1440/1450/1750
		UN	230/460/400	60/60/50	3.1/1.5/1.7	22.3/11.2/10.8	1760/1760/1450
		MA	575	60	1.16	7.2	1750
	1.5 kW IE3	NN	200/200/220	50/60/60	6.7/6.1/5.9	45.6/40.3/45.1	1450/1740/1760
		WN	380/400/400/440	50/50/60/60	3.4/3.4/3.1/3.0	21.9/23.2/20.4/22.8	1450/1450/1750/1760
		KN	220/380	60/60	5.9/3.4	45.1/25.8	1760/1760
		CN	220/230/380	50/50/50	5.9/5.9/3.4	38.5/40.4/22.1	1450/1450/1450
		EN	415/440/480	50/50/60	3.1/3.1/2.8	20.8/22.2/21.2	1450/1460/1760
		UN	230/460/400	60/60/50	5.9/2.9/3.3	44.9/22.6/23.2	1760/1760/1450
		MA	575	60	2.2	17.0	1760
	2.2 kW IE3	NN	200/200/220	50/60/60	9.3/8.6/8.2	70.3/56.9/63.7	1470/1760/1770
		WN	380/400/400/440	50/50/60/60	4.5/4.4/4.2/3.9	30.0/32.0/25.0/28.0	1440/1450/1740/1750
		KN	220/380	60/60	8.3/4.8	65.0/38.0	1770/1770
		CN	220/230/380	50/50/50	7.9/7.7/4.5	52.0/54.3/30.0	1460/1470/1440
		EN	415/440/480	50/50/60	4.3/4.3/3.8	33.1/35.5/29.8	1460/1470/1770
		UN	230/460/400	60/60/50	7.9/4.0/4.5	65.2/34.8/36.3	1770/1770/1470
		MA	575	60	3.3	24.4	1760

The rated current in the motor characteristics table is the current data for the motor operating without a gearbox.
With regard to gearmotors with a brake, it is necessary to consider the current value flowing through the brake as needed.
For more details, please contact your nearest Sales Office or the CS Center.

2-2. Performance Table

F Type IP65 Gearmotors / IP65 Gearmotors with Brake <Right Angle Hollow Bore/FS>

[Notes]

- The values in parentheses ( ) in the drawings are the indications for gearmotors with brake.
- The output shaft speed is the value relative to the synchronous speed of the motor and the reduction ratio.
- The key for the output shaft is not included.
- In the performance table, ▭ indicates that the shaft rotates clockwise when viewed from the flange surface side when the connection is made as shown on page 547 (CW). (Refer to the figure on the right)
- Allowable output shaft O.H.L. is the value at 20 mm from the end of the output shaft.
- The "*" mark indicates a limited torque type. Please make sure to check the allowable output shaft torque in the performance table.

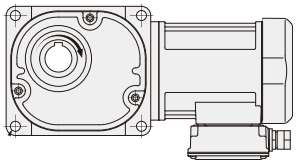

Motor Power	Frame Size	Reduction Ratio	Actual Reduction Ratio	Output Shaft Speed r/min		Allowable Output Shaft Torque N·m		Allowable Output Shaft O.H.L.	Allowable Output Shaft Thrust Load	Drawings
				50 Hz	60 Hz	50 Hz	60 Hz	N	N	
3-Phase 0.1 kW	25	1/10	1/10	150	180	5.2	4.3	1520	382	P.397
		1/12.5	2/25	120	144	6.5	5.4	1620	402	
		1/15	1/15	100	120	7.7	6.5	1720	431	
		1/20	1/20	75	90	11	8.6	1860	471	
		1/25	19/470	60	72	13	11	2010	500	
		1/30	1/30	50	60	16	13	2110	530	
		1/40	1/40	37.5	45	21	18	2300	579	
		1/50	1/50	30	36	25	22	2450	618	
		1/60	1/60	25	30	31	25	2550	637	
		1/80	1/80	18.8	22.5	39	32	2550	637	
		1/100	19/1880	15	18	49	41	2550	637	
		1/120	1/120	12.5	15	59	49	2550	637	
		1/160	1/160	9.4	11.3	78	66	2550	637	
		1/200	1/200	7.5	9	98	81	2550	637	
		* 1/240	1/240	6.3	7.5	101	98	2550	637	
	30	1/300	7/2040	5	6	131	110	3140	785	P.398
		1/375	133/47940	4	4.8	165	137	3140	785	
		1/450	7/3060	3.3	4	198	165	3140	785	
	35	1/600	7/4240	2.5	3	248	207	3630	912	P.399
		1/750	133/99640	2	2.4	311	259	3630	912	
		1/900	7/6360	1.7	2	372	311	3630	912	
		* 1/1200	7/8480	1.3	1.5	372	372	3630	912	
		* 1/1500	7/10600	1	1.2	372	372	3630	912	
3-Phase 0.2 kW	30	1/5	1/5	300	360	5.5	4.6	1520	382	P.398
		1/7.5	2/15	200	240	8.3	7	1760	441	
		1/10	1/10	150	180	11	9.2	1910	481	
		1/12.5	19/235	120	144	14	12	2060	520	
		1/15	1/15	100	120	17	14	2160	539	
		1/20	1/20	75	90	23	19	2400	598	
		1/25	1/25	60	72	27	24	2550	637	
		1/30	1/30	50	60	33	27	2650	667	
		1/40	1/40	37.5	45	44	37	2840	716	
		1/50	1/50	30	36	55	46	2990	745	
		1/60	1/60	25	30	67	55	3090	775	
		1/80	1/80	18.8	22.5	84	71	3090	775	
		1/100	19/1880	15	18	105	87	3140	785	
		1/120	1/120	12.5	15	126	105	3140	785	
		1/160	1/160	9.4	11.3	169	140	3140	785	
		* 1/200	1/200	7.5	9	184	175	3140	785	
		* 1/240	1/240	6.3	7.5	184	184	3140	785	
	35	1/300	7/2120	5	6	282	235	3630	912	P.399
		1/375	133/49820	4	4.8	353	294	3630	912	
		* 1/450	7/3180	3.3	4	372	353	3630	912	
	45	1/600	7/4240	2.5	3	534	446	5190	1275	P.400
		1/750	133/99640	2	2.4	668	557	5190	1275	
		* 1/900	7/6360	1.7	2	713	668	5190	1275	
		* 1/1200	7/8480	1.3	1.5	713	713	5190	1275	
		* 1/1500	7/10600	1	1.2	713	713	5190	1275	

Motor Power	Frame Size	Reduction Ratio	Actual Reduction Ratio	Output Shaft Speed r/min		Allowable Output Shaft Torque N·m		Allowable Output Shaft O.H.L.	Allowable Output Shaft Thrust Load	Drawings
				50 Hz	60 Hz	50 Hz	60 Hz	N	N	
3-Phase 0.4 kW	35	1/5	1/5	300	360	11	9.2	1960	490	P.399
		1/7.5	2/15	200	240	17	14	2250	569	
		1/10	1/10	150	180	23	19	2450	618	
		1/12.5	19/235	120	144	27	24	2600	647	
		1/15	1/15	100	120	33	27	2740	686	
		1/20	1/20	75	90	44	37	2990	745	
		1/25	1/25	60	72	55	46	3190	794	
		1/30	1/30	50	60	67	55	3280	824	
		1/40	1/40	37.5	45	88	74	3480	873	
		1/50	1/50	30	36	111	92	3480	873	
		1/60	1/60	25	30	133	111	3480	873	
		1/80	1/80	18.8	22.5	169	140	3480	873	
		1/100	19/1880	15	18	211	175	3530	883	
		1/120	1/120	12.5	15	253	211	3530	883	
		* 1/160	1/160	9.4	11.3	270	270	3630	912	
		* 1/200	1/200	7.5	9	270	270	3630	912	
		* /240	1/240	6.3	7.5	270	270	3630	912	
	45	1/300	7/2080	5	6	565	471	5190	1275	P.400
		1/375	133/48880	4	4.8	707	589	5190	1275	
		* 1/450	7/3120	3.3	4	713	707	5190	1275	
	55	* 1/600	49/28600	2.5	3	1030	891	9800	2452	P.401
		* 1/750	11/8320	2	2.4	1030	1030	9800	2452	
		* 1/900	7/6136	1.7	2	1030	1030	9800	2452	
		* 1/1200	49/57200	1.3	1.5	1030	1030	9800	2452	
		* 1/1500	11/16640	1	1.2	1030	1030	9800	2452	
3-Phase 0.75 kW	45	1/5	1/5	300	360	21	18	2940	735	P.400
		1/7.5	2/15	200	240	31	25	3330	834	
		1/10	1/10	150	180	41	34	3630	912	
		1/12.5	19/235	120	144	52	43	3920	980	
		1/15	1/15	100	120	63	52	4070	1030	
		1/20	1/20	75	90	83	70	4460	1079	
		1/25	1/25	60	72	104	86	4700	1177	
		1/30	1/30	50	60	124	104	4750	1177	
		1/40	1/40	37.5	45	166	138	4750	1177	
		1/50	1/50	30	36	208	173	4750	1177	
		1/60	1/60	25	30	249	208	4750	1177	
		1/80	1/80	18.8	22.5	316	263	4750	1177	
		1/100	19/1880	15	18	395	328	4750	1177	
		1/120	1/120	12.5	15	473	395	4750	1177	
		* 1/160	1/160	9.4	11.3	554	526	5190	1275	
		* 1/200	1/200	7.5	9	554	554	5190	1275	
		* 1/240	1/240	6.3	7.5	554	554	5190	1275	
	55	* 1/300	7/2120	5	6	1030	883	9800	2452	P.401
		* 1/375	1/371	4	4.8	1030	1030	9800	2452	
		* 1/450	7/3180	3.3	4	1030	1030	9800	2452	

Note 1: Please be sure to read the notes on page 392.

Motor Power	Frame Size	Reduction Ratio	Actual Reduction Ratio	Output Shaft Speed r/min		Allowable Output Shaft Torque N·m		Allowable Output Shaft O.H.L.	Allowable Output Shaft Thrust Load	Drawings
				50 Hz	60 Hz	50 Hz	60 Hz	N	N	
3-Phase 1.5 kW	55	1/5	1/5	300	360	41	34	4700	1177	P.401
		1/7.5	2/15	200	240	63	52	5340	1324	
		1/10	1/10	150	180	83	70	5780	1422	
		1/12.5	4/49	120	144	104	86	6130	1520	
		1/15	1/15	100	120	124	104	6320	1569	
		1/20	14/275	75	90	166	138	6320	1569	
		1/25	11/280	60	72	208	173	6320	1569	
		1/30	2/59	50	60	249	208	6320	1569	
		1/40	1/40	37.5	45	332	276	6320	1569	
		1/50	1/49	30	36	416	345	6320	1569	
		1/60	1/60	25	30	498	416	6320	1569	
		1/80	7/550	18.8	22.5	631	526	6420	1618	
		1/100	11/1120	15	18	789	658	6420	1618	
		1/120	1/118	12.5	15	947	789	7500	1863	
		* 1/160	7/1100	9.4	11.3	1030	1030	8330	2059	
		* 1/200	11/2240	7.5	9	1030	1030	9020	2256	
		* 1/240	1/236	6.3	7.5	1030	1030	9800	2452	
3-Phase 2.2 kW	55	1/5	1/5	300	360	61	51	4700	1177	P.401
		1/7.5	2/15	200	240	91	76	5340	1324	
		1/10	1/10	150	180	122	102	5780	1422	
		1/12.5	4/49	120	144	152	126	6130	1520	
		1/15	1/15	100	120	182	152	6320	1569	
		1/20	14/275	75	90	244	203	6320	1569	
		1/25	11/280	60	72	305	254	6320	1569	
		1/30	2/59	50	60	366	305	6320	1569	
		1/40	1/40	37.5	45	487	406	6320	1569	
		1/50	1/49	30	36	609	508	6320	1569	
		1/60	1/60	25	30	731	609	6320	1569	
		1/80	7/550	18.8	22.5	926	771	6420	1618	
		* 1/100	11/1120	15	18	1030	964	6420	1618	
		* 1/120	1/118	12.5	15	1030	1030	7500	1863	

Note 1: Please be sure to read the notes on page 392.

FA Type IP65 Gearmotors / IP65 Gearmotors with Brake <Right Angle Hollow Bore/FAS>

[Notes]

- The values in parentheses ( ) in the drawings are the indications for gearmotors with brake.
- The output shaft speed is the value relative to the synchronous speed of the motor and the reduction ratio.
- The key for the output shaft is not included.
- In the performance table, ▭ indicates that the shaft rotates clockwise when viewed from the flange surface side when the connection is made as shown on page 547 (CW). (Refer to the figure on the right)
- Allowable output shaft O.H.L. is the value at 20 mm from the end of the output shaft.
- The "*" mark indicates a limited torque type. Please make sure to check the allowable output shaft torque in the performance table.

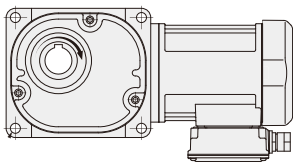

Motor Power	Frame Size	Reduction Ratio	Actual Reduction Ratio	Output Shaft Speed r/min		Allowable Output Shaft Torque N·m		Allowable Output Shaft O.H.L.	Allowable Output Shaft Thrust Load	Drawings
				50 Hz	60 Hz	50 Hz	60 Hz	N	N	
3-Phase 0.4kW	55	* 1/600	49/28600	2.5	3	1030	891	9800	2452	P.402
		* 1/750	11/8320	2	2.4	1030	1030	9800	2452	
		* 1/900	7/6136	1.7	2	1030	1030	9800	2452	
		* 1/1200	49/57200	1.3	1.5	1030	1030	9800	2452	
		* 1/1500	11/16640	1	1.2	1030	1030	9800	2452	
3-Phase 0.75kW	55	* 1/300	7/2120	5	6	1030	883	9800	2452	P.402
		* 1/375	1/371	4	4.8	1030	1030	9800	2452	
		* 1/450	7/3180	3.3	4	1030	1030	9800	2452	
3-Phase 1.5kW	55	1/5	1/5	300	360	41	34	4700	1177	P.402
		1/7.5	2/15	200	240	63	52	5340	1324	
		1/10	1/10	150	180	83	70	5780	1422	
		1/12.5	4/49	120	144	104	86	6130	1520	
		1/15	1/15	100	120	124	104	6320	1569	
		1/20	14/275	75	90	166	138	6320	1569	
		1/25	11/280	60	72	208	173	6320	1569	
		1/30	2/59	50	60	249	208	6320	1569	
		1/40	1/40	37.5	45	332	276	6320	1569	
		1/50	1/49	30	36	416	345	6320	1569	
		1/60	1/60	25	30	498	416	6320	1569	
		1/80	7/550	18.8	22.5	631	526	6420	1618	
		1/100	11/1120	15	18	789	658	6420	1618	
		1/120	1/118	12.5	15	947	789	7500	1863	
		* 1/160	7/1100	9.4	11.3	1030	1030	8330	2059	
		* 1/200	11/2240	7.5	9	1030	1030	9020	2256	
		* 1/240	1/236	6.3	7.5	1030	1030	9800	2452	

Motor Power	Frame Size	Reduction Ratio	Actual Reduction Ratio	Output Shaft Speed r/min		Allowable Output Shaft Torque N·m		Allowable Output Shaft O.H.L.	Allowable Output Shaft Thrust Load	Drawings
				50 Hz	60 Hz	50 Hz	60 Hz	N	N	
3-Phase 2.2kW	55	1/5	1/5	300	360	61	51	4700	1177	P.402
		1/7.5	2/15	200	240	91	76	5340	1324	
		1/10	1/10	150	180	122	102	5780	1422	
		1/12.5	4/49	120	144	152	126	6130	1520	
		1/15	1/15	100	120	182	152	6320	1569	
		1/20	14/275	75	90	244	203	6320	1569	
		1/25	11/280	60	72	305	254	6320	1569	
		1/30	2/59	50	60	366	305	6320	1569	
		1/40	1/40	37.5	45	487	406	6320	1569	
		1/50	1/49	30	36	609	508	6320	1569	
		1/60	1/60	25	30	731	609	6320	1569	
		1/80	7/550	18.8	22.5	926	771	6420	1618	
		* 1/100	11/1120	15	18	1030	964	6420	1618	
		* 1/120	1/118	12.5	15	1030	1030	7500	1863	

Note 1: Please be sure to read the notes on page 395.

2-3. Drawings

FS Type Right Angle Hollow Bore | Shaft Diameter 25 | **Flange** Mounting

The values in parentheses ( ) are the indications for gearmotors with brake.

<Figure 1>

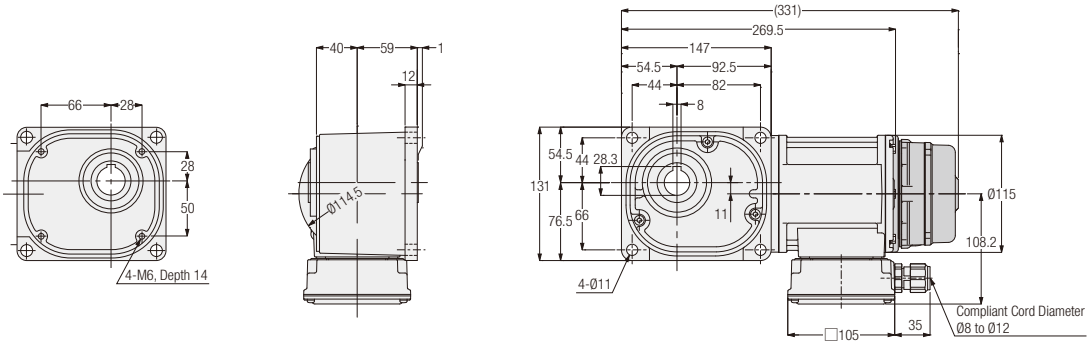

Number of Phases	Power	Output Shaft: Stainless Steel	Output Shaft: Carbon Steel	Reduction Ratio	Figure Number	Brake	Approx. Weight (kg)
3-Phase	0.1 kW	FS25S✱✱✱-WM01T◇◇EN	FS25N✱✱✱-WM01T◇◇EN	10, 12.5, 15, 20, 25, 30, 40, 50, 60, 80, 100, 120, 160, 200, 240	1	No	7.5
		FS25S✱✱✱-WM01T◇◇EV◆	FS25N✱✱✱-WM01T◇◇EV◆			Yes	9

Note: The reduction ratio will be indicated as ✱✱✱ in the nomenclature. Supply voltage/certification codes are indicated as ◇◇ and brake specification is indicated as ◆.
Note: When the reduction ratio is 12.5, “12” will be indicated as ✱✱✱ in the nomenclature.
Note: Please refer to page 982 for the details of the output shaft dimensions.
Note: Please refer to page 392 for the performance table.

FS Type Right Angle Hollow Bore | Shaft Diameter **30** | **Flange** Mounting

The values in parentheses ( ) are the indications for gearmotors with brake.

<Figure 1>

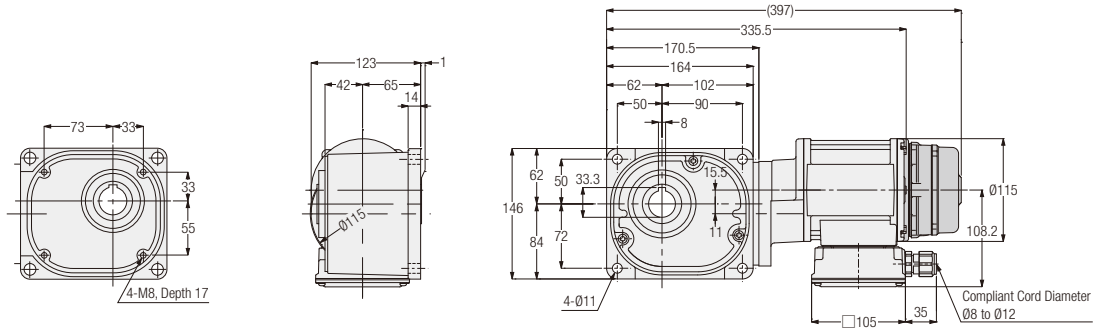

<Figure 2>

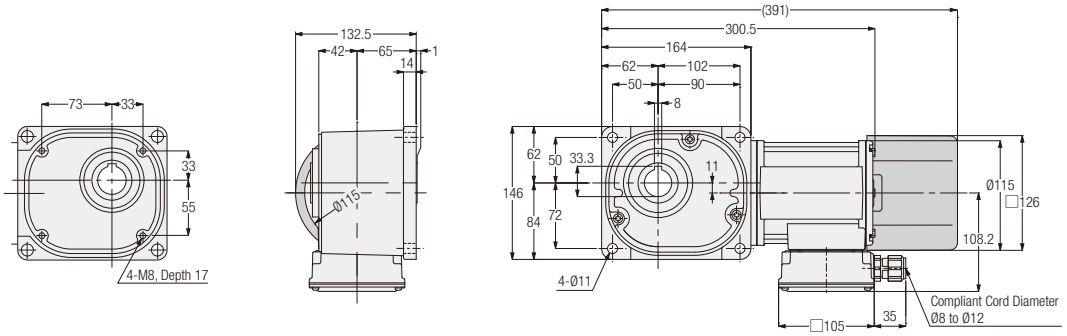

Number of Phases	Power	Output Shaft: Stainless Steel	Output Shaft: Carbon Steel	Reduction Ratio	Figure Number	Brake	Approx. Weight (kg)
3-Phase	0.1 kW	FS30S✱✱✱-WM01T◇◇EN	FS30N✱✱✱-WM01T◇◇EN	300, 375, 450	1	No	11.5
		FS30S✱✱✱-WM01T◇◇EV◆	FS30N✱✱✱-WM01T◇◇EV◆			Yes	13
	0.2 kW	FS30S✱✱✱-WM02T◇◇EN	FS30N✱✱✱-WM02T◇◇EN	5, 7.5, 10, 12.5, 15, 20, 25, 30, 40, 50, 60, 80, 100, 120, 160, 200, 240	2	No	9.5
		FS30S✱✱✱-WM02T◇◇EV◆	FS30N✱✱✱-WM02T◇◇EV◆			Yes	11

Note: The reduction ratio will be indicated as ✱✱✱ in the nomenclature. Supply voltage/certification codes are indicated as ◇◇ and brake specification is indicated as ◆.
Note: When the reduction ratio is 7.5, "7" will be indicated as ✱✱✱ in the nomenclature, and when the reduction ratio is 12.5, "12" will be indicated as ✱✱✱ in the nomenclature.
Note: Please refer to page 982 for the details of the output shaft dimensions.
Note: Please refer to page 392 for the performance table.

FS Type Right Angle Hollow Bore | Shaft Diameter 35 | **Flange** Mounting

The values in parentheses ( ) are the indications for gearmotors with brake.

<Figure 1>

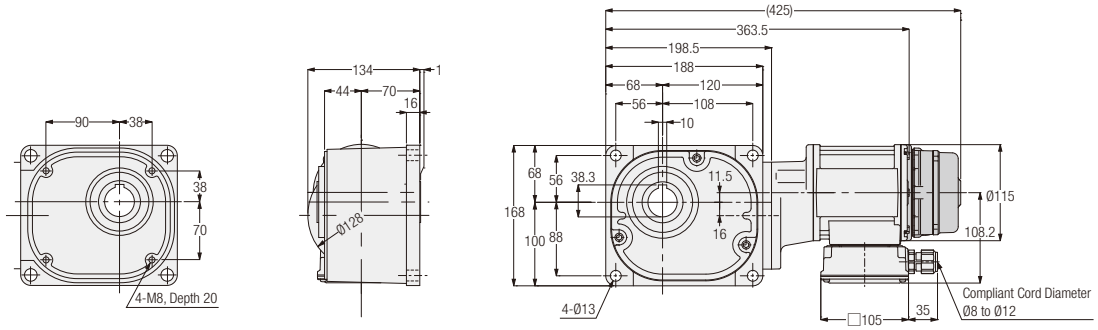

<Figure 2>

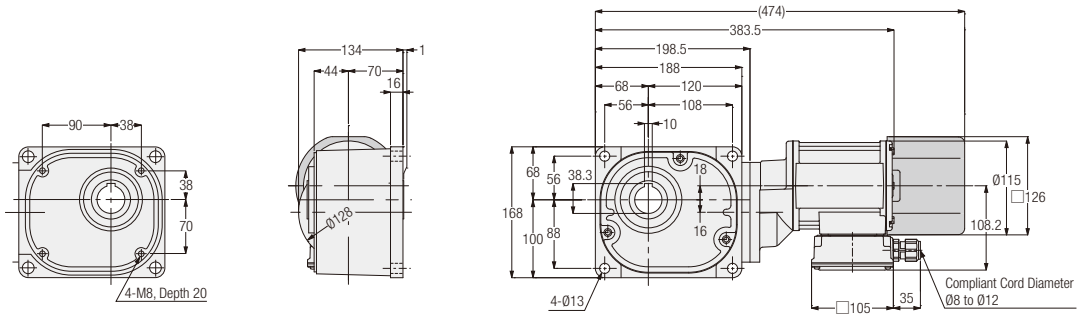

<Figure 3>

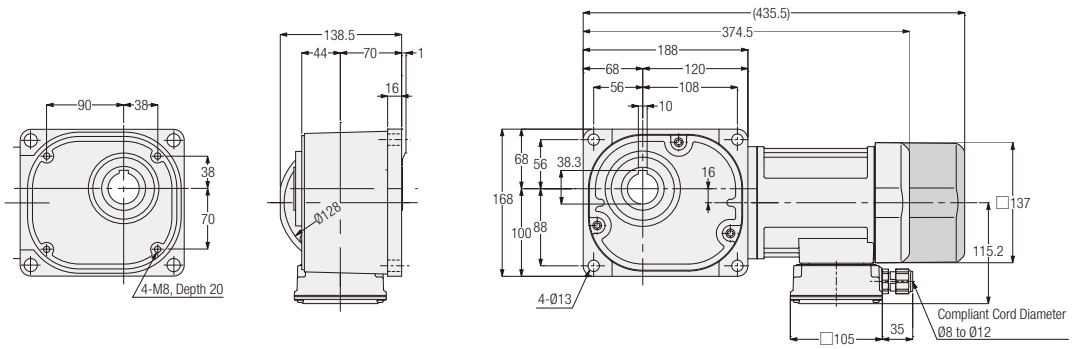

Number of Phases	Power	Output Shaft: Stainless Steel	Output Shaft: Carbon Steel	Reduction Ratio	Figure Number	Brake	Approx. Weight (kg)
3-Phase	0.1 kW	FS35S✱✱✱-WM01T◇◇EN	FS35N✱✱✱-WM01T◇◇EN	600, 750, 900, 1200, 1500	1	No	13.5
		FS35S✱✱✱-WM01T◇◇EV◆	FS35N✱✱✱-WM01T◇◇EV◆			Yes	15
	0.2 kW	FS35S✱✱✱-WM02T◇◇EN	FS35N✱✱✱-WM02T◇◇EN	300, 375, 450	2	No	14.5
		FS35S✱✱✱-WM02T◇◇EV◆	FS35N✱✱✱-WM02T◇◇EV◆			Yes	16
	0.4 kW	FS35S✱✱✱-WM04T◇◇EN	FS35N✱✱✱-WM04T◇◇EN	5, 7.5, 10, 12.5, 15, 20, 25, 30, 40, 50, 60, 80, 100, 120, 160, 200, 240	3	No	14
		FS35S✱✱✱-WM04T◇◇EV◆	FS35N✱✱✱-WM04T◇◇EV◆			Yes	16

Note: The reduction ratio will be indicated as ✱✱✱ in the nomenclature. Supply voltage/certification codes are indicated as ◇◇ and brake specification is indicated as ◆.
Note: When the reduction ratio is 7.5, "7" will be indicated as ✱✱✱ in the nomenclature, and when the reduction ratio is 12.5, "12" will be indicated as ✱✱✱ in the nomenclature.
Note: Please refer to page 982 for the details of the output shaft dimensions.
Note: Please refer to page 392 for the performance table.

FS Type Right Angle Hollow Bore | Shaft Diameter **45** | **Flange** Mounting

The values in parentheses ( ) are the indications for gearmotors with brake.

<Figure 1>

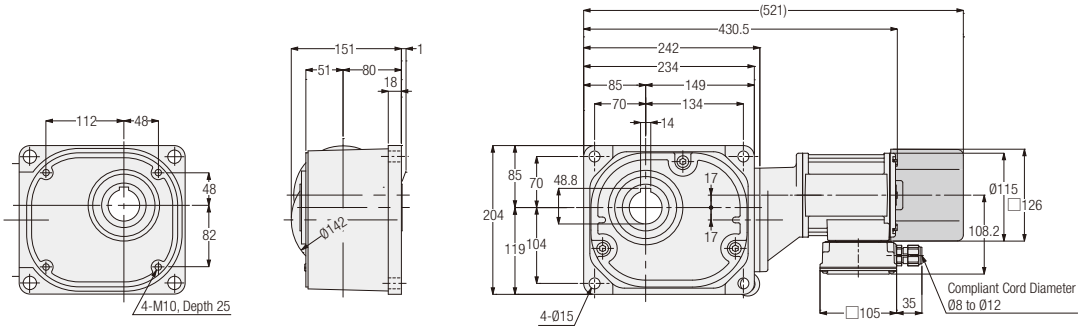

<Figure 2>

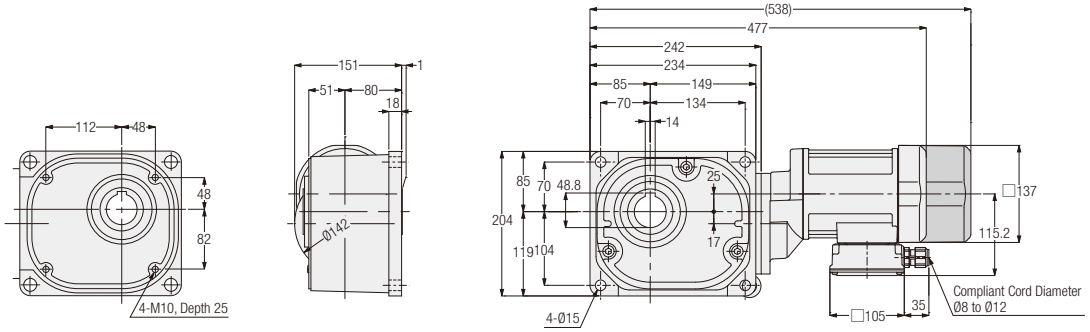

<Figure 3>

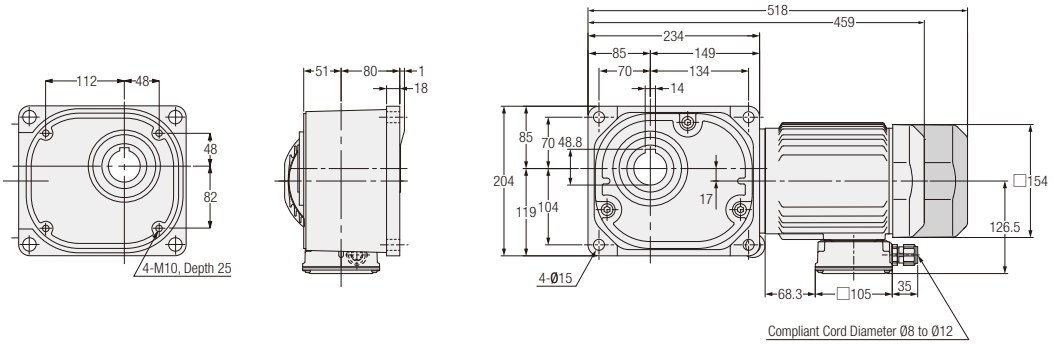

Number of Phases	Power	Output Shaft: Stainless Steel	Output Shaft: Carbon Steel	Reduction Ratio	Figure Number	Brake	Approx. Weight (kg)
3-Phase	0.2 kW	FS45S✱✱✱-WM02T◇◇EN	FS45N✱✱✱-WM02T◇◇EN	600, 750, 900, 1200, 1500	1	No	20
		FS45S✱✱✱-WM02T◇◇EV◆	FS45N✱✱✱-WM02T◇◇EV◆			Yes	21.5
	0.4 kW	FS45S✱✱✱-WM04T◇◇EN	FS45N✱✱✱-WM04T◇◇EN	300, 375, 450	2	No	22.5
		FS45S✱✱✱-WM04T◇◇EV◆	FS45N✱✱✱-WM04T◇◇EV◆			Yes	24
	0.75 kW	FS45S✱✱✱-WR08T◇◇EN	FS45N✱✱✱-WR08T◇◇EN	5, 7.5, 10, 12.5, 15, 20, 25, 30, 40, 50, 60, 80, 100, 120, 160, 200, 240	3	No	27.5
		FS45S✱✱✱-WR08T◇◇EV◆	FS45N✱✱✱-WR08T◇◇EV◆			Yes	30.5

Note: The reduction ratio will be indicated as ✱✱✱ in the nomenclature. Supply voltage/certification codes are indicated as ◇◇ and brake specification is indicated as ◆.
Note: When the reduction ratio is 7.5, "7" will be indicated as ✱✱✱ in the nomenclature, and when the reduction ratio is 12.5, "12" will be indicated as ✱✱✱ in the nomenclature.
Note: Please refer to page 982 for the details of the output shaft dimensions.
Note: Please refer to page 392 for the performance table.

FS Type Right Angle Hollow Bore | Shaft Diameter 55 | **Flange** Mounting

The values in parentheses ( ) are the indications for gearmotors with brake.

<Figure 1>

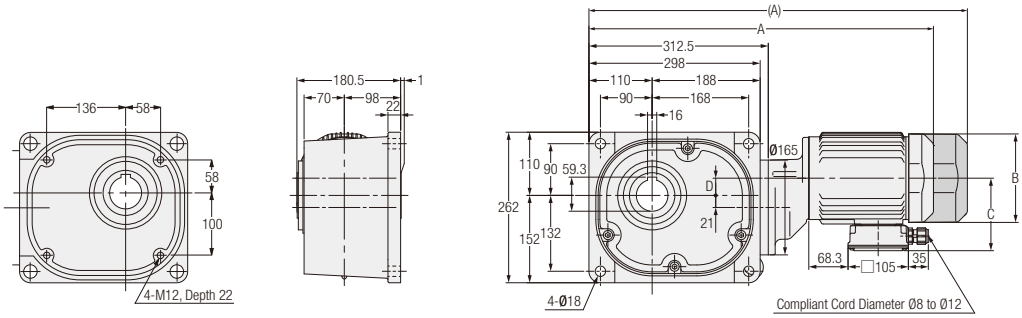

<Figure 2>

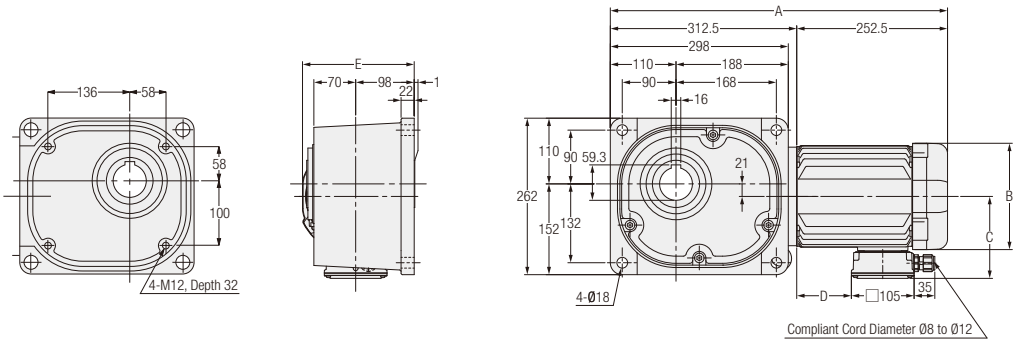

Number of Phases	Power	Output Shaft: Stainless Steel	Output Shaft: Carbon Steel	Reduction Ratio	Figure Number	Brake	Approx. Weight (kg)	A	B	C	D	E
3-Phase	0.4 kW	FS55S✱✱✱-WM04T◇◇EN	FS55N✱✱✱-WM04T◇◇EN	600, 750, 900, 1200, 1500	1	No	60.5	547.5	□137	115.2	21	-
		FS55S✱✱✱-WM04T◇◇EV◆	FS55N✱✱✱-WM04T◇◇EV◆			Yes	62	608.5	□137	115.2	21	-
	0.75 kW	FS55S✱✱✱-WR08T◇◇EN	FS55N✱✱✱-WR08T◇◇EN	300, 375, 450	1	No	68.5	600	□154	126.5	30	-
		FS55S✱✱✱-WR08T◇◇EV◆	FS55N✱✱✱-WR08T◇◇EV◆			Yes	71	659	□154	126.5	30	-
	1.5 kW	FS55S✱✱✱-WR15T◇◇EN	FS55N✱✱✱-WR15T◇◇EN	5, 7.5, 10, 12.5, 15, 20, 25, 30, 40, 50, 60, 80, 100, 120, 160, 200, 240	2	No	74.5	565	□178	137.5	91.5	187
	2.2 kW	FS55S✱✱✱-WR22T◇◇EN	FS55N✱✱✱-WR22T◇◇EN			No	85	614.5	□192	147.5	140.5	194

Note: The reduction ratio will be indicated as ✱✱✱ in the nomenclature. Supply voltage/certification codes are indicated as ◇◇ and brake specification is indicated as ◆.
Note: When the reduction ratio is 7.5, "7" will be indicated as ✱✱✱ in the nomenclature, and when the reduction ratio is 12.5, "12" will be indicated as ✱✱✱ in the nomenclature.
Note: There are no gearmotors with motor power of 1.5 kW and 2.2 kW that have a brake.
Note: Please refer to page 982 for the details of the output shaft dimensions.
Note: Please refer to page 393 for the performance table.

FAS Type Right Angle Hollow Bore | Shaft Diameter 55 | **Flange** Mounting

The values in parentheses ( ) are the indications for gearmotors with brake.

<Figure 1>

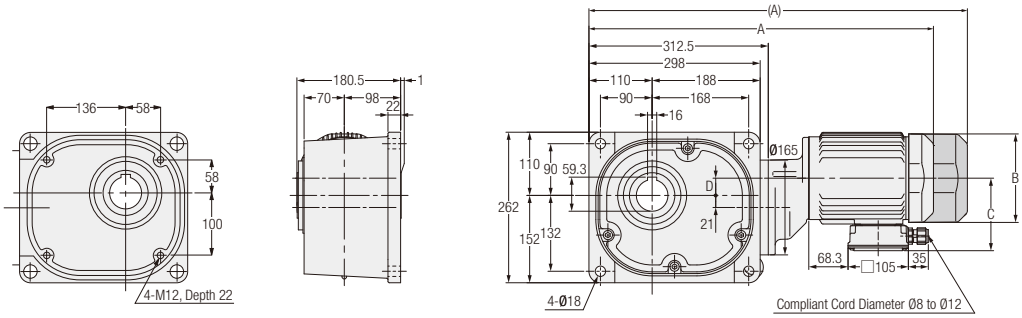

<Figure 2>

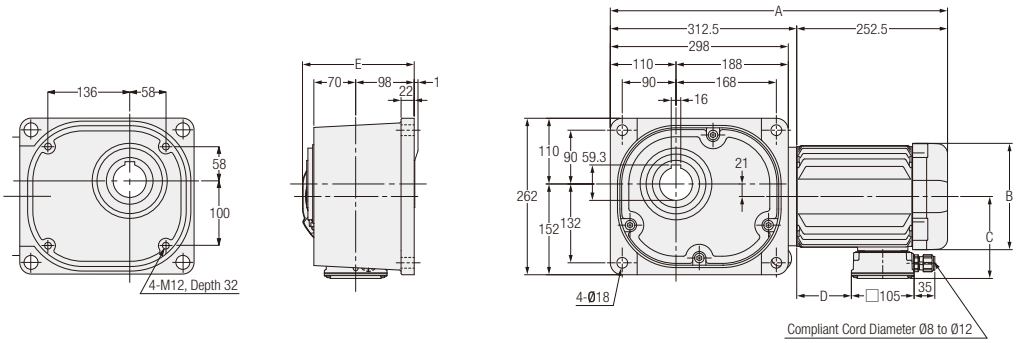

Number of Phases	Power	Output Shaft: Stainless Steel	Output Shaft: Carbon Steel	Reduction Ratio	Figure Number	Brake	Approx. Weight (kg)	A	B	C	D	E
3-Phase	0.4kW	FAS55S✱✱✱-WM04T◇◇EN	FAS55N✱✱✱-WM04T◇◇EN	600,750,900, 1200,1500	1	No	42.7	547.5	□137	115.2	21	-
		FAS55S✱✱✱-WM04T◇◇EV◆	FAS55N✱✱✱-WM04T◇◇EV◆			Yes	44.2	608.5	□137	115.2	21	-
	0.75kW	FAS55S✱✱✱-WR08T◇◇EN	FAS55N✱✱✱-WR08T◇◇EN	300,375,450	1	No	50.7	600	□154	126.5	30	-
		FAS55S✱✱✱-WR08T◇◇EV◆	FAS55N✱✱✱-WR08T◇◇EV◆			Yes	53.2	659	□154	126.5	30	-
	1.5kW	FAS55S✱✱✱-WR15T◇◇EN	FAS55N✱✱✱-WR15T◇◇EN	5, 7.5, 10, 12.5, 15, 20, 25, 30, 40, 50, 60, 80, 100, 120, 160, 200, 240	2	No	56.7	565	□178	137.5	91.5	187
	2.2kW	FAS55S✱✱✱-WR22T◇◇EN	FAS55N✱✱✱-WR22T◇◇EN			No	67.2	614.5	□192	147.5	140.5	194

Note: The reduction ratio will be indicated as ✱✱✱ in the nomenclature. Supply voltage/certification codes are indicated as ◇◇ and brake specification is indicated as ◆.
Note: When the reduction ratio is 7.5, “7” will be indicated as ✱✱✱ in the nomenclature, and when the reduction ratio is 12.5, “12” will be indicated as ✱✱✱ in the nomenclature.
Note: There are no gearmotors with motor power of 1.5 kW and 2.2 kW that have a brake.
Note: Please refer to page 982 for the details of the output shaft dimensions.
Note: Please refer to page 395 for the performance table.

MEMO

3. Gearboxes (Double Shaft Type)

3-1. Performance Table

F Type <Right Angle Hollow Bore/FS>

[Notes]
- The motor power value is based on usage of 4 poles motor.
- When using an output shaft for a motor other than a 4 poles motor, the allowable output shaft torque value is calculated by multiplying the torque by the torque correction coefficient as shown on page 626.
- Allowable output shaft O.H.L. is the value at 20 mm from the end of the output shaft.
- Please refer to below figure for the rotational direction of the output shaft.
- The "*" mark indicates a limited torque type. Please make sure to check the allowable output shaft torque in the performance table.
- The key for the output shaft is not included.

■ Rotational Direction Relationship (When Viewed from the Flange Surface Side)

The rotational direction shown Below with arrow illustrates the rotation relationship between the output shaft / input and is no way illustrating limitations in rotational direction.

Type	Power	Reduction Ratio
Right Angle Hollow Bore/FS Type	0.1 kW to 0.75 kW	1/5 to 1/60
	1.5 kW to 2.2 kW	1/5 to 1/30

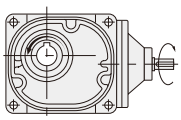

Type	Power	Reduction Ratio
Right Angle Hollow Bore/FS Type	0.1 kW to 0.75 kW	1/80 to 1/240
	1.5 kW to 2.2 kW	1/40 to 1/240

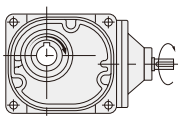

4 Poles Motor Power Class	Frame Size	Reduction Ratio	Actual Reduction Ratio	Allowable Output Shaft Torque Input (1500 r/min)	Allowable O.H.L. N		Allowable Output Shaft Thrust Load	Drawings
				N·m	Input Shaft	Output Shaft	N	
0.1 kW	25	1/10	1/10	5.2	196	1520	382	P.407
		1/12.5	2/25	6.5		1620	402	
		1/15	1/15	7.7		1720	431	
		1/20	1/20	11		1860	471	
		1/25	19/470	13		2010	500	
		1/30	1/30	16		2110	530	
		1/40	1/40	21		2300	579	
		1/50	1/50	25		2450	618	
		1/60	1/60	31		2550	637	
		1/80	1/80	39		2550	637	
		1/100	19/1880	49		2550	637	
		1/120	1/120	59		2550	637	
		1/160	1/160	78		2550	637	
		1/200	1/200	98		2550	637	
		* 1/240	1/240	101		2550	637	
0.2 kW	30	1/5	1/5	5.5	245	1520	382	P.407
		1/7.5	2/15	8.3		1760	441	
		1/10	1/10	11		1910	481	
		1/12.5	19/235	14		2060	520	
		1/15	1/15	17		2160	539	
		1/20	1/20	23		2400	598	
		1/25	1/25	27		2550	637	
		1/30	1/30	33		2650	667	
		1/40	1/40	44		2840	716	
		1/50	1/50	55		2990	745	
		1/60	1/60	67		3090	775	
		1/80	1/80	84		3090	775	
		1/100	19/1880	105		3140	785	
		1/120	1/120	126		3140	785	
		1/160	1/160	169		3140	785	
		* 1/200	1/200	184		3140	785	
		* 1/240	1/240	184		3140	785	

4 Poles Motor Power Class	Frame Size	Reduction Ratio	Actual Reduction Ratio	Allowable Output Shaft Torque Input (1500 r/min)	Allowable O.H.L. N		Allowable Output Shaft Thrust Load	Drawings
				N·m	Input Shaft	Output Shaft	N	
0.4 kW	35	1/5	1/5	11	294	1960	490	P.408
		1/7.5	2/15	17		2250	569	
		1/10	1/10	23		2450	618	
		1/12.5	19/235	27		2600	647	
		1/15	1/15	33		2740	686	
		1/20	1/20	44		2990	745	
		1/25	1/25	55		3190	794	
		1/30	1/30	67		3280	824	
		1/40	1/40	88		3480	873	
		1/50	1/50	111		3480	873	
		1/60	1/60	133		3480	873	
		1/80	1/80	169		3480	873	
		1/100	19/1880	211		3530	883	
		1/120	1/120	253		3530	883	
		* 1/160	1/160	270		3630	912	
		* 1/200	1/200	270		3630	912	
		* 1/240	1/240	270		3630	912	
0.75 kW	45	1/5	1/5	21	392	2940	735	P.408
		1/7.5	2/15	31		3330	834	
		1/10	1/10	41		3630	912	
		1/12.5	19/235	52		3920	980	
		1/15	1/15	63		4070	1030	
		1/20	1/20	83		4460	1079	
		1/25	1/25	104		4700	1177	
		1/30	1/30	124		4750	1177	
		1/40	1/40	166		4750	1177	
		1/50	1/50	208		4750	1177	
		1/60	1/60	249		4750	1177	
		1/80	1/80	316		4750	1177	
		1/100	19/1880	395		4750	1177	
		1/120	1/120	473		4750	1177	
		* 1/160	1/160	554		5190	1275	
		* 1/200	1/200	554		5190	1275	
		* 1/240	1/240	554		5190	1275	
1.5 kW	55	1/5	1/5	41	392	4700	1177	P.409
		1/7.5	2/15	63		5340	1324	
		1/10	1/10	83		5780	1422	
		1/12.5	4/49	104		6130	1520	
		1/15	1/15	124		6320	1569	
		1/20	14/275	166		6320	1569	
		1/25	11/280	208		6320	1569	
		1/30	2/59	249		6320	1569	
		1/40	1/40	332		6320	1569	
		1/50	1/49	416		6320	1569	
		1/60	1/60	498		6320	1569	
		1/80	7/550	631		6420	1618	
		1/100	11/1120	789		6420	1618	
		1/120	1/118	947		7500	1863	
		* 1/160	7/1100	1030		8330	2059	
		* 1/200	11/2240	1030		9020	2256	
		* 1/240	1/236	1030		9800	2452	
2.2 kW	55	1/5	1/5	61	392	4700	1177	P.409
		1/7.5	2/15	91		5340	1324	
		1/10	1/10	122		5780	1422	
		1/12.5	4/49	152		6130	1520	
		1/15	1/15	182		6320	1569	
		1/20	14/275	244		6320	1569	
		1/25	11/280	305		6320	1569	
		1/30	2/59	366		6320	1569	
		1/40	1/40	487		6320	1569	
		1/50	1/49	609		6320	1569	
		1/60	1/60	731		6320	1569	
		1/80	7/550	926		6420	1618	
		* 1/100	11/1120	1030		6420	1618	
		* 1/120	1/118	1030		7500	1863	

FA Type <Right Angle Hollow Bore/FAS>

[Notes]

- The motor power value is based on usage of 4 poles motor.
- When using an output shaft for a motor other than a 4 poles motor, the allowable output shaft torque value is calculated by multiplying the torque by the torque correction coefficient as shown on page 626.
- Allowable output shaft O.H.L. is the value at 20 mm from the end of the output shaft.
- Please refer to below figure for the rotational direction of the output shaft.
- The "*" mark indicates a limited torque type. Please make sure to check the allowable output shaft torque in the performance table.
- The key for the output shaft is not included.

■ Rotational Direction Relationship (When Viewed from the Flange Surface Side)

The rotational direction shown Below with arrow illustrates the rotation relationship between the output shaft / input and is no way illustrating limitations in rotational direction.

Type	Power	Reduction Ratio
Right Angle Hollow Bore/FAS Type	1.5 kW to 2.2 kW	1/5 to 1/30

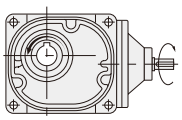

Type	Power	Reduction Ratio
Right Angle Hollow Bore/FAS Type	1.5 kW to 2.2 kW	1/40 to 1/240

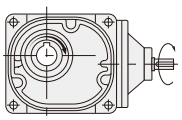

4 Poles Motor Power Class	Frame Size	Reduction Ratio	Actual Reduction Ratio	Allowable Output Shaft Torque Input (1500 r/min)	Allowable O.H.L. N		Allowable Output Shaft Thrust Load	Drawings
				N·m	Input Shaft	Output Shaft	N	
1.5 kW	55	1/5	1/5	41	392	4700	1177	P.410
		1/7.5	2/15	63		5340	1324	
		1/10	1/10	83		5780	1422	
		1/12.5	4/49	104		6130	1520	
		1/15	1/15	124		6320	1569	
		1/20	14/275	166		6320	1569	
		1/25	11/280	208		6320	1569	
		1/30	2/59	249		6320	1569	
		1/40	1/40	332		6320	1569	
		1/50	1/49	416		6320	1569	
		1/60	1/60	498		6320	1569	
		1/80	7/550	631		6420	1618	
		1/100	11/1120	789		6420	1618	
		1/120	1/118	947		7500	1863	
		* 1/160	7/1100	1030		8330	2059	
		* 1/200	11/2240	1030		9020	2256	
		* 1/240	1/236	1030		9800	2452	
2.2 kW	55	1/5	1/5	61	392	4700	1177	P.410
		1/7.5	2/15	91		5340	1324	
		1/10	1/10	122		5780	1422	
		1/12.5	4/49	152		6130	1520	
		1/15	1/15	182		6320	1569	
		1/20	14/275	244		6320	1569	
		1/25	11/280	305		6320	1569	
		1/30	2/59	366		6320	1569	
		1/40	1/40	487		6320	1569	
		1/50	1/49	609		6320	1569	
		1/60	1/60	731		6320	1569	
		1/80	7/550	926		6420	1618	
		* 1/100	11/1120	1030		6420	1618	
		* 1/120	1/118	1030		7500	1863	

3-2. Drawings

FS Type Right Angle Hollow Bore | Shaft Diameter **25** | **Flange** Mounting

<Figure 1>

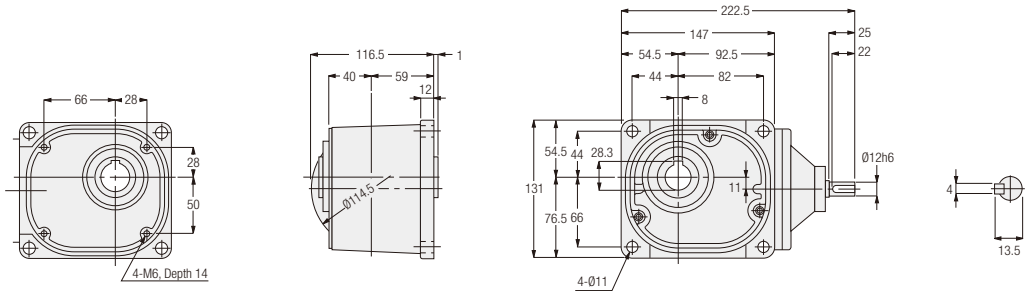

Motor Power Class	Part Number	Reduction Ratio	Figure Number	Approx. Weight (kg)
0.1 kW	FS-25-✻✻✻-010	10, 12.5, 15, 20, 25, 30, 40, 50, 60, 80, 100, 120, 160, 200, 240	1	5

Note: The reduction ratio will be indicated as ✻✻✻ in the nomenclature.
Note: Please refer to page 982 for the details of the output shaft dimensions.
Note: Please refer to page 404 for the performance table.

FS Type Right Angle Hollow Bore | Shaft Diameter **30** | **Flange** Mounting

<Figure 2>

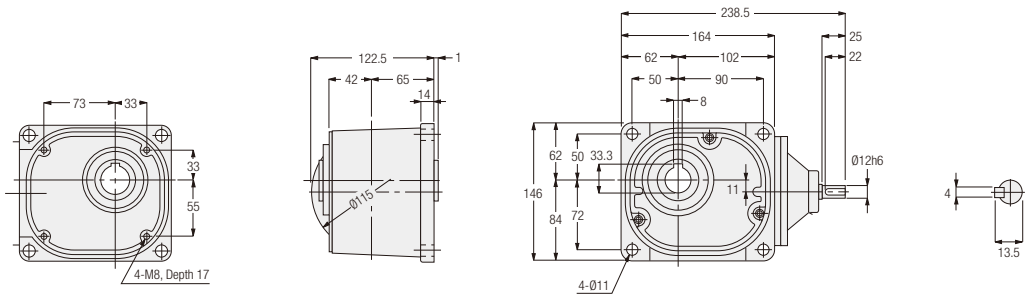

Motor Power Class	Part Number	Reduction Ratio	Figure Number	Approx. Weight (kg)
0.2 kW	FS-30-✻✻✻-020	5, 7.5, 10, 12.5, 15, 20, 25, 30, 40, 50, 60, 80, 100, 120, 160, 200, 240	2	7

Note: The reduction ratio will be indicated as ✻✻✻ in the nomenclature.
Note: Please refer to page 982 for the details of the output shaft dimensions.
Note: Please refer to page 404 for the performance table.

FS Type Right Angle Hollow Bore Shaft Diameter 35 Flange Mounting

<Figure 1>

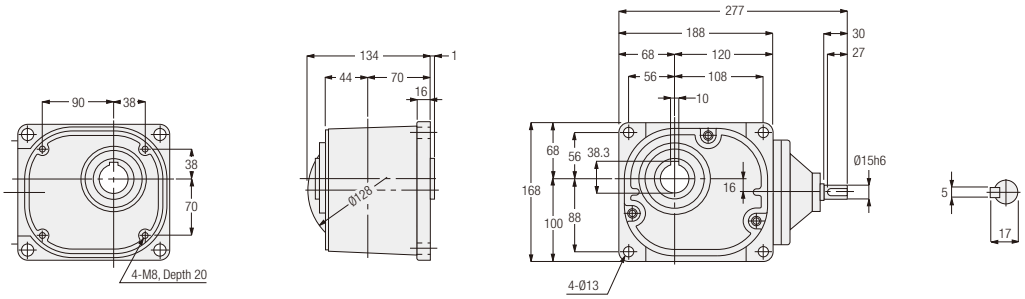

Motor Power Class	Part Number	Reduction Ratio	Figure Number	Approx. Weight (kg)
0.4 kW	FS-35-***-040	5, 7.5, 10, 12.5, 15, 20, 25, 30, 40, 50, 60, 80, 100, 120, 160, 200, 240	1	9

Note: The reduction ratio will be indicated as *** in the nomenclature.
Note: Please refer to page 982 for the details of the output shaft dimensions.
Note: Please refer to page 405 for the performance table.

FS Type Right Angle Hollow Bore Shaft Diameter 45 Flange Mounting

<Figure 2>

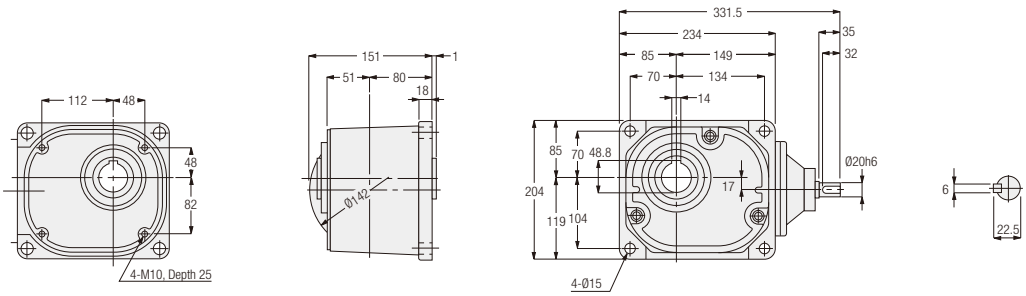

Motor Power Class	Part Number	Reduction Ratio	Figure Number	Approx. Weight (kg)
0.75 kW	FS-45-***-075	5, 7.5, 10, 12.5, 15, 20, 25, 30, 40, 50, 60, 80, 100, 120, 160, 200, 240	2	15

Note: The reduction ratio will be indicated as *** in the nomenclature.
Note: Please refer to page 982 for the details of the output shaft dimensions.
Note: Please refer to page 405 for the performance table.

FS Type Right Angle Hollow Bore | Shaft Diameter **55** | **Flange** Mounting

<Figure 1>

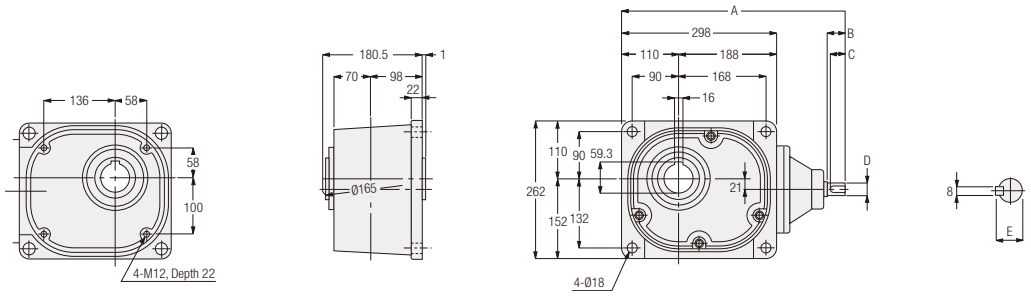

Motor Power Class	Part Number	Reduction Ratio	Figure Number	Approx. Weight (kg)	A	B	C	D	E
1.5 kW	FS-55-✱✱✱-150	5, 7.5, 10, 12.5, 15, 20, 25, 30, 40, 50, 60, 80, 100, 120, 160, 200, 240	1	54	429	40	35	Ø25h6	28
2.2 kW	FS-55-✱✱✱-220	5, 7.5, 10, 12.5, 15, 20, 25, 30, 40, 50, 60, 80, 100, 120	1	55	441	45	40	Ø30h6	33

Note: The reduction ratio will be indicated as ✱✱✱ in the nomenclature.
Note: Please refer to page 982 for the details of the output shaft dimensions.
Note: Please refer to page 405 for the performance table.

FAS Type Right Angle Hollow Bore | Shaft Diameter 55 | Flange Mounting

<Figure 1>

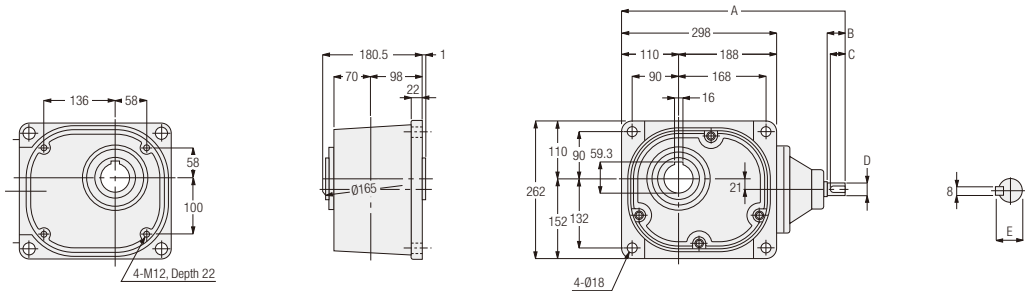

Motor Power Class	Part Number	Reduction Ratio	Figure Number	Approx. Weight (kg)	A	B	C	D	E
1.5 kW	FAS-55-✻✻✻-150	5, 7.5, 10, 12.5, 15, 20, 25, 30, 40, 50, 60, 80, 100, 120, 160, 200, 240	1	36.2	429	40	35	Ø25h6	28
2.2 kW	FAS-55-✻✻✻-220	5, 7.5, 10, 12.5, 15, 20, 25, 30, 40, 50, 60, 80, 100, 120	1	37.2	441	45	40	Ø30h6	33

Note: The reduction ratio will be indicated as ✻✻✻ in the nomenclature.
Note: Please refer to page 982 for the details of the output shaft dimensions.
Note: Please refer to page 406 for the performance table.

MEMO

4. S-Type Gearboxes (Type Which Can Be Equipped With Designated Motor)

4-1. Performance Table

F Type <Right Angle Hollow Bore/FS>

[Notes]
- The value of the allowable output shaft torque is the value when a 4 poles motor is used.
- When using an output shaft for a motor other than a 4 poles motor, the allowable output shaft torque value is calculated by multiplying the torque by the torque correction coefficient as shown on page 626 .
- The key for the output shaft is not included.
- Allowable output shaft O.H.L. is the value at 20 mm from the end of the output shaft.
- Please refer to below figure for the rotational direction of the output shaft.
- The "*" mark indicates a limited torque type. Please make sure to check the allowable output shaft torque in the performance table.

■ Rotational Direction Relationship (When Viewed from the Flange Surface Side)

The rotational direction shown Below with arrow illustrates the rotation relationship between the output shaft / input and is no way illustrating limitations in rotational direction.

Type	Power	Reduction Ratio
Right Angle Hollow Bore/FS Type	0.1 kW to 0.75 kW	1/5 to 1/60
	1.5 kW to 2.2 kW	1/5 to 1/30

Type	Power	Reduction Ratio
Right Angle Hollow Bore/FS Type	0.1 kW to 0.75 kW	1/80 to 1/240
	1.5 kW to 2.2 kW	1/40 to 1/240

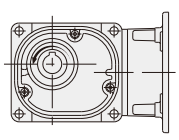
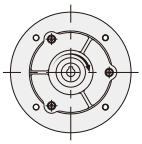
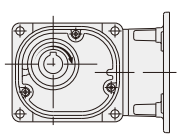
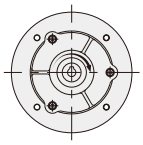

4 Poles Motor Power Class	Frame Size	Reduction Ratio	Actual Reduction Ratio	Allowable Output Shaft Torque N·m		Allowable Output Shaft O.H.L.	Allowable Output Shaft Thrust Load	Drawings
				50 Hz	60 Hz	N	N	
0.1 kW	25	1/10	1/10	5.2	4.3	1520	382	P.415
		1/12.5	2/25	6.5	5.4	1620	402	
		1/15	1/15	7.7	6.5	1720	431	
		1/20	1/20	11	8.6	1860	471	
		1/25	19/470	13	11	2010	500	
		1/30	1/30	16	13	2110	530	
		1/40	1/40	21	18	2300	579	
		1/50	1/50	25	22	2450	618	
		1/60	1/60	31	25	2550	637	
		1/80	1/80	39	32	2550	637	
		1/100	19/1880	49	41	2550	637	
		1/120	1/120	59	49	2550	637	
		1/160	1/160	78	66	2550	637	
		1/200	1/200	98	81	2550	637	
		* 1/240	1/240	101	98	2550	637	
0.2 kW	30	1/5	1/5	5.5	4.6	1520	382	P.415
		1/7.5	2/15	8.3	7	1760	441	
		1/10	1/10	11	9.2	1910	481	
		1/12.5	19/235	14	12	2060	520	
		1/15	1/15	17	14	2160	539	
		1/20	1/20	23	19	2400	598	
		1/25	1/25	27	24	2550	637	
		1/30	1/30	33	27	2650	667	
		1/40	1/40	44	37	2840	716	
		1/50	1/50	55	46	2990	745	
		1/60	1/60	67	55	3090	775	
		1/80	1/80	84	71	3090	775	
		1/100	19/1880	105	87	3140	785	
		1/120	1/120	126	105	3140	785	
		1/160	1/160	169	140	3140	785	
		* 1/200	1/200	184	175	3140	785	
		* 1/240	1/240	184	184	3140	785	

4 Poles Motor Power Class	Frame Size	Reduction Ratio	Actual Reduction Ratio	Allowable Output Shaft Torque N·m		Allowable Output Shaft O.H.L.	Allowable Output Shaft Thrust Load	Drawings
				50 Hz	60 Hz	N	N	
0.4 kW	35	1/5	1/5	11	9.2	1960	490	P.416
		1/7.5	2/15	17	14	2250	569	
		1/10	1/10	23	19	2450	618	
		1/12.5	19/235	27	24	2600	647	
		1/15	1/15	33	27	2740	686	
		1/20	1/20	44	37	2990	745	
		1/25	1/25	55	46	3190	794	
		1/30	1/30	67	55	3280	824	
		1/40	1/40	88	74	3480	873	
		1/50	1/50	111	92	3480	873	
		1/60	1/60	133	111	3480	873	
		1/80	1/80	169	140	3480	873	
		1/100	19/1880	211	175	3530	883	
		1/120	1/120	253	211	3530	883	
		* 1/160	1/160	270	270	3630	912	
		* 1/200	1/200	270	270	3630	912	
		* 1/240	1/240	270	270	3630	912	
0.75 kW	45	1/5	1/5	21	18	2940	735	P.416
		1/7.5	2/15	31	25	3330	834	
		1/10	1/10	41	34	3630	912	
		1/12.5	19/235	52	43	3920	980	
		1/15	1/15	63	52	4070	1030	
		1/20	1/20	83	70	4460	1079	
		1/25	1/25	104	86	4700	1177	
		1/30	1/30	124	104	4750	1177	
		1/40	1/40	166	138	4750	1177	
		1/50	1/50	208	173	4750	1177	
		1/60	1/60	249	208	4750	1177	
		1/80	1/80	316	263	4750	1177	
		1/100	19/1880	395	328	4750	1177	
		1/120	1/120	473	395	4750	1177	
		* 1/160	1/160	554	526	5190	1275	
		* 1/200	1/200	554	554	5190	1275	
		* 1/240	1/240	554	554	5190	1275	
1.5 kW	55	1/5	1/5	41	34	4700	1177	P.417
		1/7.5	2/15	63	52	5340	1324	
		1/10	1/10	83	70	5780	1422	
		1/12.5	4/49	104	86	6130	1520	
		1/15	1/15	124	104	6320	1569	
		1/20	14/275	166	138	6320	1569	
		1/25	11/280	208	173	6320	1569	
		1/30	2/59	249	208	6320	1569	
		1/40	1/40	332	276	6320	1569	
		1/50	1/49	416	345	6320	1569	
		1/60	1/60	498	416	6320	1569	
		1/80	7/550	631	526	6420	1618	
		1/100	11/1120	789	658	6420	1618	
		1/120	1/118	947	789	7500	1863	
		* 1/160	7/1100	1030	1030	8330	2059	
		* 1/200	11/2240	1030	1030	9020	2256	
		* 1/240	1/236	1030	1030	9800	2452	
2.2 kW	55	1/5	1/5	61	51	4700	1177	P.417
		1/7.5	2/15	91	76	5340	1324	
		1/10	1/10	122	102	5780	1422	
		1/12.5	4/49	152	126	6130	1520	
		1/15	1/15	182	152	6320	1569	
		1/20	14/275	244	203	6320	1569	
		1/25	11/280	305	254	6320	1569	
		1/30	2/59	366	305	6320	1569	
		1/40	1/40	487	406	6320	1569	
		1/50	1/49	609	508	6320	1569	
		1/60	1/60	731	609	6320	1569	
		1/80	7/550	926	771	6420	1618	
		* 1/100	11/1120	1030	964	6420	1618	
		* 1/120	1/118	1030	1030	7500	1863	

FA Type <Right Angle Hollow Bore/FAS>

[Notes]

- The value of the allowable output shaft torque is the value when a 4 poles motor is used.
- When using an output shaft for a motor other than a 4 poles motor, the allowable output shaft torque value is calculated by multiplying the torque by the torque correction coefficient as shown on page 626.
- The key for the output shaft is not included.
- Allowable output shaft O.H.L. is the value at 20 mm from the end of the output shaft.
- Please refer to below figure for the rotational direction of the output shaft.
- The "*" mark indicates a limited torque type. Please make sure to check the allowable output shaft torque in the performance table.

■ Rotational Direction Relationship (When Viewed from the Flange Surface Side)

The rotational direction shown Below with arrow illustrates the rotation relationship between the output shaft / input and is no way illustrating limitations in rotational direction.

Type	Power	Reduction Ratio
Right Angle Hollow Bore/FAS Type	1.5 kW to 2.2 kW	1/5 to 1/30

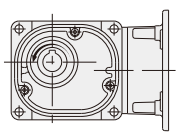
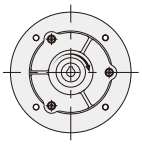

Type	Power	Reduction Ratio
Right Angle Hollow Bore/FAS Type	1.5 kW to 2.2 kW	1/40 to 1/240

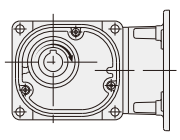
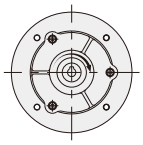

4 Poles Motor Power Class	Frame Size	Reduction Ratio	Actual Reduction Ratio	Allowable Output Shaft Torque N·m		Allowable Output Shaft O.H.L.	Allowable Output Shaft Thrust Load	Drawings
				50 Hz	60 Hz	N	N	
1.5 kW	55	1/5	1/5	41	34	4700	1177	P.418
		1/7.5	2/15	63	52	5340	1324	
		1/10	1/10	83	70	5780	1422	
		1/12.5	4/49	104	86	6130	1520	
		1/15	1/15	124	104	6320	1569	
		1/20	14/275	166	138	6320	1569	
		1/25	11/280	208	173	6320	1569	
		1/30	2/59	249	208	6320	1569	
		1/40	1/40	332	276	6320	1569	
		1/50	1/49	416	345	6320	1569	
		1/60	1/60	498	416	6320	1569	
		1/80	7/550	631	526	6420	1618	
		1/100	11/1120	789	658	6420	1618	
		1/120	1/118	947	789	7500	1863	
		* 1/160	7/1100	1030	1030	8330	2059	
		* 1/200	11/2240	1030	1030	9020	2256	
		* 1/240	1/236	1030	1030	9800	2452	
2.2 kW	55	1/5	1/5	61	51	4700	1177	P.418
		1/7.5	2/15	91	76	5340	1324	
		1/10	1/10	122	102	5780	1422	
		1/12.5	4/49	152	126	6130	1520	
		1/15	1/15	182	152	6320	1569	
		1/20	14/275	244	203	6320	1569	
		1/25	11/280	305	254	6320	1569	
		1/30	2/59	366	305	6320	1569	
		1/40	1/40	487	406	6320	1569	
		1/50	1/49	609	508	6320	1569	
		1/60	1/60	731	609	6320	1569	
		1/80	7/550	926	771	6420	1618	
		* 1/100	11/1120	1030	964	6420	1618	
		* 1/120	1/118	1030	1030	7500	1863	

4-2. Drawings

FS Type Right Angle Hollow Bore | Shaft Diameter **25** | **Flange** Mounting

<Figure 1>

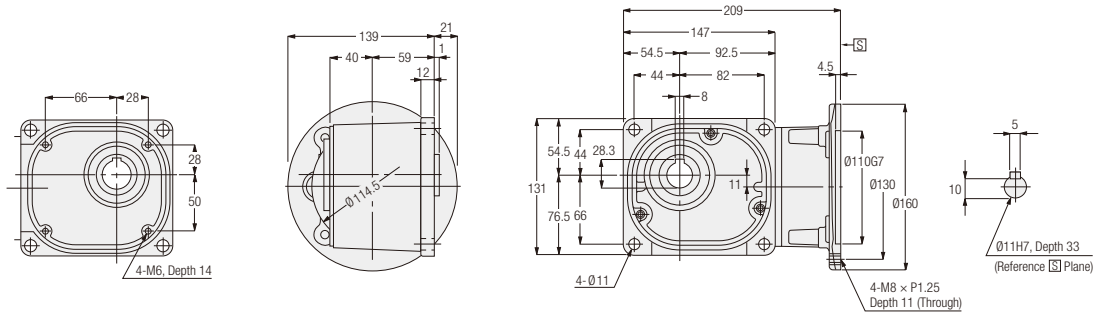

Motor Power Class	Part Number	Reduction Ratio	Figure Number	Approx. Weight (kg)
0.1 kW	FSS-25-✱✱✱-010	10, 12.5, 15, 20, 25, 30, 40, 50, 60, 80, 100, 120, 160, 200, 240	1	5.5

Note: The reduction ratio will be indicated as ✱✱✱ in the nomenclature.
Note: Please refer to page 982 for the details of the output shaft dimensions.
Note: Please refer to page 412 for the performance table.
Note: Please refer to page 630 for the details of the motor mounting area.

FS Type Right Angle Hollow Bore | Shaft Diameter **30** | **Flange** Mounting

<Figure 2>

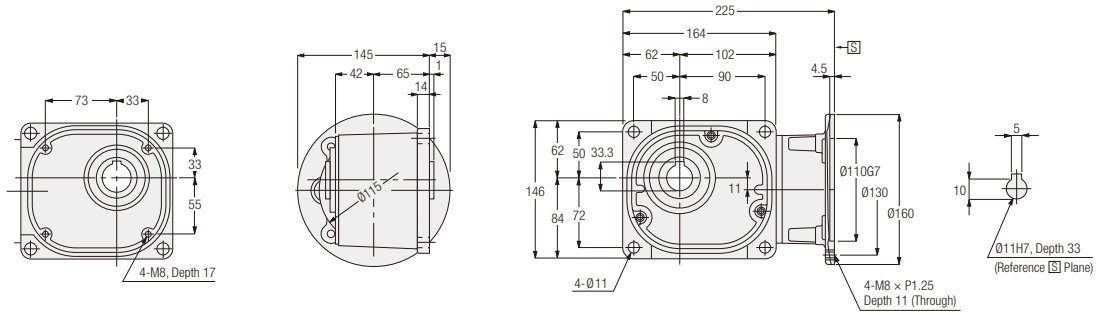

Motor Power Class	Part Number	Reduction Ratio	Figure Number	Approx. Weight (kg)
0.2 kW	FSS-30-✱✱✱-020	5, 7.5, 10, 12.5, 15, 20, 25, 30, 40, 50, 60, 80, 100, 120, 160, 200, 240	2	7.5

Note: The reduction ratio will be indicated as ✱✱✱ in the nomenclature.
Note: Please refer to page 982 for the details of the output shaft dimensions.
Note: Please refer to page 412 for the performance table.
Note: Please refer to page 630 for the details of the motor mounting area.

FS Type Right Angle Hollow Bore Shaft Diameter 35 Flange Mounting

<Figure 1>

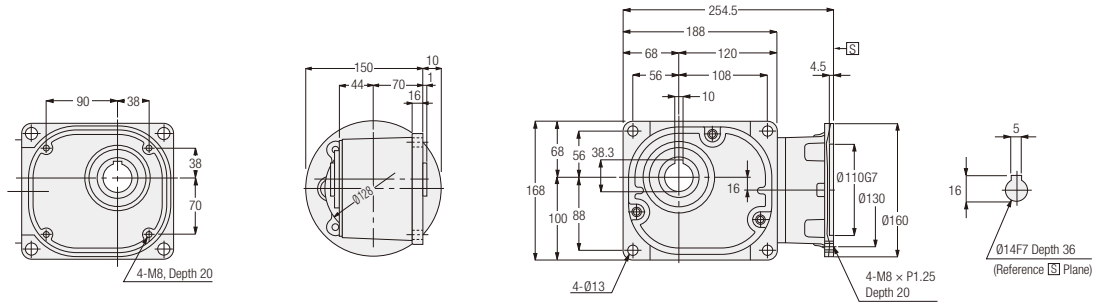

Motor Power Class	Part Number	Reduction Ratio	Figure Number	Approx. Weight (kg)
0.4 kW	FSS-35-***-040	5, 7.5, 10, 12.5, 15, 20, 25, 30, 40, 50, 60, 80, 100, 120, 160, 200, 240	1	10

Note: The reduction ratio will be indicated as *** in the nomenclature.
Note: Please refer to page 982 for the details of the output shaft dimensions.
Note: Please refer to page 413 for the performance table.
Note: Please refer to page 630 for the details of the motor mounting area.

FS Type Right Angle Hollow Bore Shaft Diameter 45 Flange Mounting

<Figure 2>

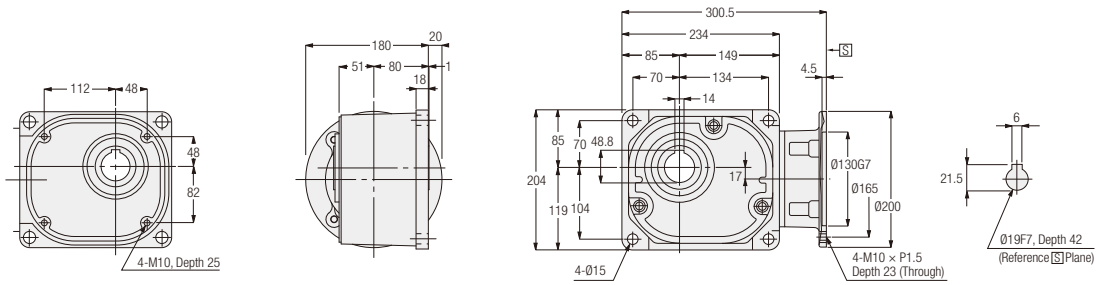

Motor Power Class	Part Number	Reduction Ratio	Figure Number	Approx. Weight (kg)
0.75 kW	FSS-45-***-075	5, 7.5, 10, 12.5, 15, 20, 25, 30, 40, 50, 60, 80, 100, 120, 160, 200, 240	2	16

Note: The reduction ratio will be indicated as *** in the nomenclature.
Note: Please refer to page 982 for the details of the output shaft dimensions.
Note: Please refer to page 413 for the performance table.
Note: Please refer to page 630 for the details of the motor mounting area.

FS Type Right Angle Hollow Bore | Shaft Diameter **55** | **Flange** Mounting

<Figure 1>

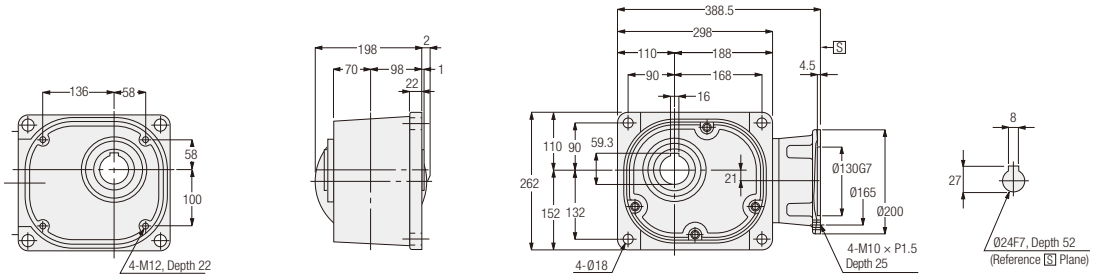

<Figure 2>

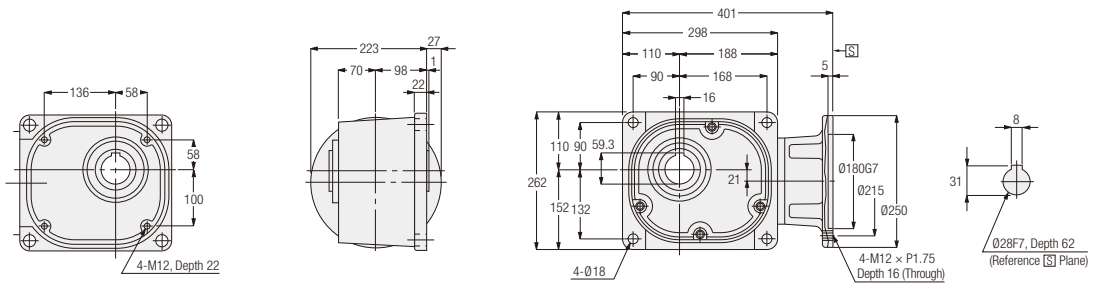

Motor Power Class	Part Number	Reduction Ratio	Figure Number	Approx. Weight (kg)
1.5 kW	FSS-55-✱✱✱-150	5, 7.5, 10, 12.5, 15, 20, 25, 30, 40, 50, 60, 80, 100, 120, 160, 200, 240	1	54
2.2 kW	FSS-55-✱✱✱-220	5, 7.5, 10, 12.5, 15, 20, 25, 30, 40, 50, 60, 80, 100, 120	2	55

Note: The reduction ratio will be indicated as ✱✱✱ in the nomenclature.
Note: Please refer to page 982 for the details of the output shaft dimensions.
Note: Please refer to page 413 for the performance table.
Note: Please refer to page 630 for the details of the motor mounting area.

FAS Type Right Angle Hollow Bore | Shaft Diameter 55 | Flange Mounting

<Figure 1>

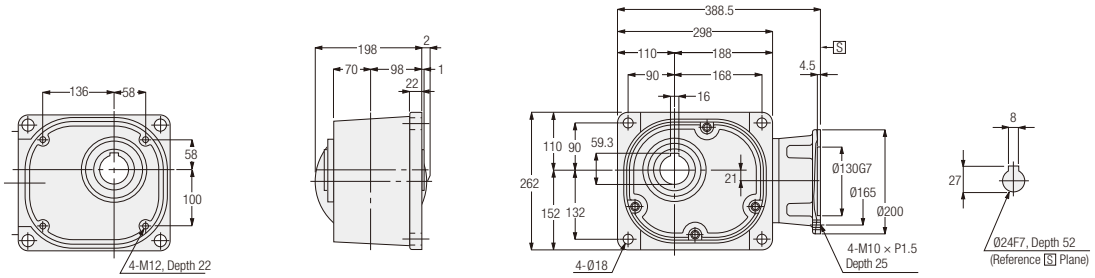

<Figure 2>

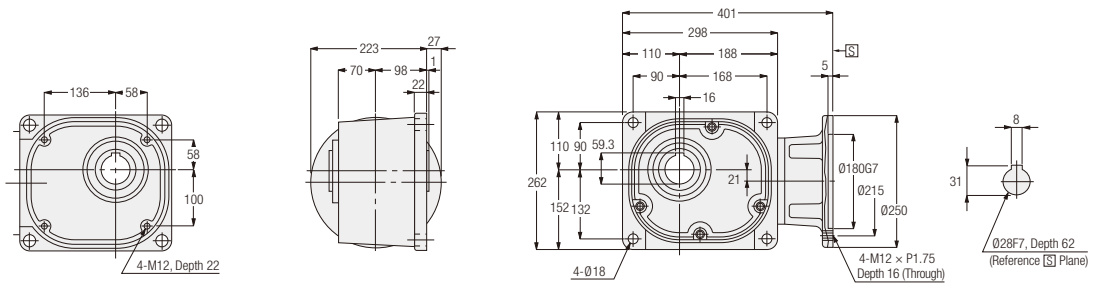

Motor Power Class	Part Number	Reduction Ratio	Figure Number	Approx. Weight (kg)
1.5 kW	FASS-55-✱✱✱-150	5, 7.5, 10, 12.5, 15, 20, 25, 30, 40, 50, 60, 80, 100, 120, 160, 200, 240	1	36.2
2.2 kW	FASS-55-✱✱✱-220	5, 7.5, 10, 12.5, 15, 20, 25, 30, 40, 50, 60, 80, 100, 120	2	37.2

Note: The reduction ratio will be indicated as ✱✱✱ in the nomenclature.
Note: Please refer to page 982 for the details of the output shaft dimensions.
Note: Please refer to page 414 for the performance table.
Note: Please refer to page 630 for the details of the motor mounting area.

F2/F3 Type

Concentric Right Angle Hollow Bore/ Concentric Right Angle Shaft

Standard Specification
Model and Type Codes
Standard Model Lineup

INDUCTION GEARMOTORS

P.444 **1. Gearmotors/Gearmotors with Brake**
- **1-1. Motor Characteristics Table**
- **1-2. Performance Table**
- **1-3. Drawings**

P.480 **2. IP65 Gearmotors/ IP65 Gearmotors with Brake**
- **2-1. Motor Characteristics Table**
- **2-2. Performance Table**
- **2-3. Drawings**

P.494 **3. Speed Control Gearmotors**
- **3-1. Properties and Motor Characteristics Table**
- **3-2. Graph for Speed Characteristics**
- **3-3. Performance Table**
- **3-4. Drawings**

P.504 **4. Gearboxes (Double Shaft Type)**
- **4-1. Performance Table**
- **4-2. Drawings**

P.510 **5. S-Type Gearboxes (Type Which Can Be Equipped with Designated Motor)**
- **5-1. Performance Table**
- **5-2. Drawings**

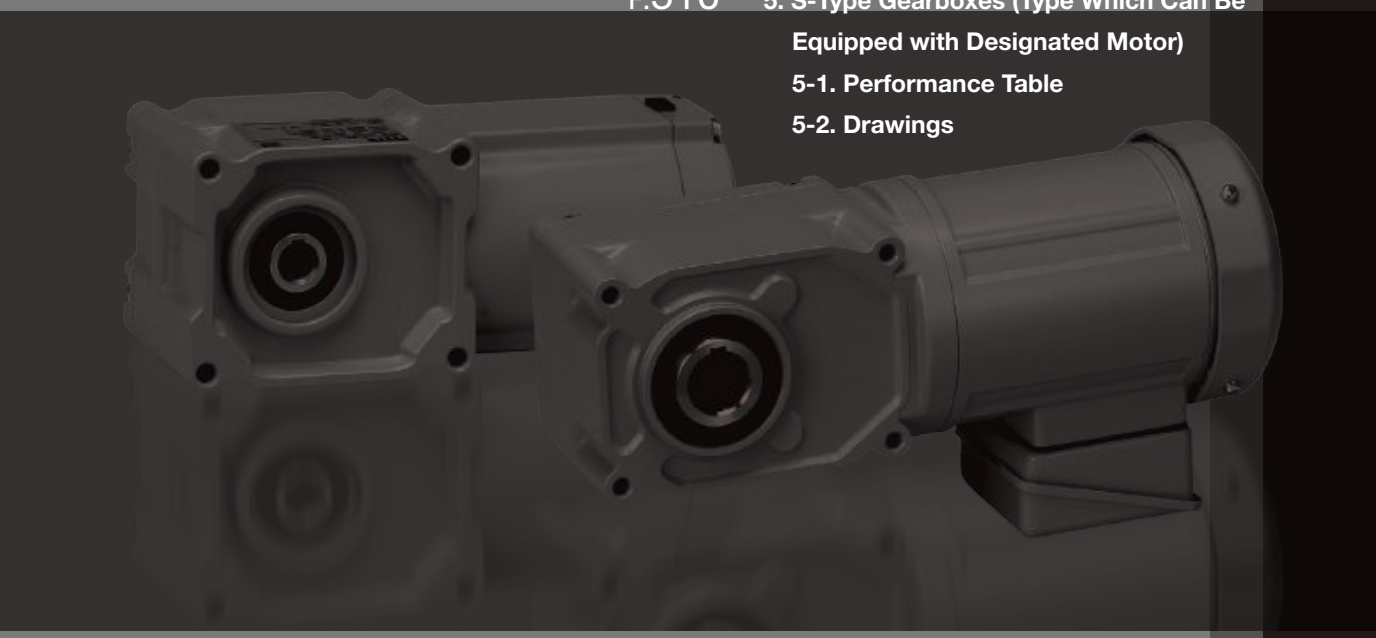

Standard Specification

F2 Type Gearmotors/Gearmotors with Brake <Concentric Right Angle Hollow Bore/F2S, Concentric Right Angle Shaft/F2F>

Series		MINI	
Motor Unit	Number of Phases	3-Phase	1-Phase
	Power	15 W to 90 W	
	Power Supply	Standard voltage 200 V/50 Hz, 200 V/60 Hz, 220 V/60 Hz High Voltage (400 V Class) 380 V/50 Hz, 400 V/50 Hz, 400 V/60 Hz, 440 V/60 Hz	Standard voltage 100 V/50 Hz, 100 V/60 Hz High Voltage (200 V Class) 200 V/50 Hz, 200 V/60 Hz
	Insulation Class	Ins. B	
	Startup Method	Direct Power Input	Capacitor Run
	Cooling Method	Totally Enclosed Non-Ventilated (TENV) (IC410) or Totally Enclosed Fan Cooled (TEFC) (IC411)	
	Number of Motor Poles	4	
	Rating	Continuous	
Gearbox	Reduction Method	Hypoid Gear and Helical Gear	
	Lubrication Type	Grease Lubrication (Maintenance-free)	
	Output Shaft	JIS Key (JIS B 1301-1996) (Plain form) * The key material is included with concentric right angle shaft types.	
	Output Shaft Material	Carbon Steel	
	Case Material	Aluminum	
Ambient Conditions	Ambient Temperature	-10 °C to 40 °C	
	Ambient Humidity	85 % max (No Condensation)	
	Altitude	1,000 m max	
	Installation Environment	A place free from corrosive gas, explosive gas and/or vapor. Well ventilated place with no dust.	
	Installation Place	Indoors	
Paint	Paint Color	Gray	
Mounting Direction		No limitations in mounting angle	
Motor Characteristics		P.444 (F2S Type), P.447 (F2F Type)	
Performance Table		P.449 (F2S Type), P.455 (F2F Type)	
Drawings		P.460	

F3 Type Gearmotors/Gearmotors with Brake <Concentric Right Angle Hollow Bore/F3S, Concentric Right Angle Shaft/F3F>

Series		MID				
Motor Unit	Number of Phases	3-Phase				1-Phase (Note 4)
	Power	0.1 kW to 2.2 kW				0.1 kW to 0.4 kW (1/8 HP to 1/2 HP)
	Power Supply	Type	Global Standards Conformance	Power Supply/Frequency		Standard Voltage 100 V/50 Hz, 100 V/60 Hz High Voltage (200 V Class) 200 V/50 Hz, 200 V/60 Hz
		Standard Voltage	UL/CE/CCC	200 V/50 Hz, 200 V/60 Hz, 220 V/60 Hz		
		High Voltage (400 V Class)	UL/CE/CCC	380 V/50 Hz, 400 V/50 Hz, 400 V/60 Hz, 440 V/60 Hz		
		Special Voltage	South Korea/Taiwan UL/CE/CCC	220 V/60 Hz, 380 V/60 Hz (Dual Voltage)		
			China UL/CE/CCC	220 V/50 Hz, 230 V/50 Hz, 380 V/50 Hz (Dual Voltage)		
			China/South Korea/Taiwan UL/CE/CCC	220 V/50 Hz, 220 V/60 Hz, 380 V/50 Hz, 380 V/60 Hz (Dual Voltage) (Note 1)		
			Europe/North America UL/cUL/CE/CCC	415 V/50 Hz, 440 V/50 Hz, 480 V/60 Hz		
			North America/ Europe UL/cUL/CE/CCC	230 V/60 Hz, 460 V/60 Hz, 400 V/50 Hz (Dual Voltage) (Note 2)		
			North America/ Europe UL/cUL/CE/CCC	208 V/60 Hz, 230 V/60 Hz, 460 V/60 Hz, 400 V/50 Hz (Note 3)		
			Canada UL/cUL	575 V/60 Hz		
	Insulation Class	Ins. F				Ins. B
	Startup Method	Direct Power Input				Capacitor Start (0.1 kW: Capacitor Run)
	Cooling Method	Totally Enclosed Fan Cooled (TEFC) (IC411) (All of 0.1 kW and 0.2 kW models without brake are totally enclosed non-ventilated (TENV) (IC410))				Totally Enclosed Fan Cooled (TEFC) (IC411)
	Number of Motor Poles	4				
	Rating	Power	Motor Efficiency	UL/CE Standard	CCC Standard	Continuous
		0.1 kW	IE1	Continuous	Continuous	
		0.2 kW, 0.4 kW (Note 5)	IE2	Continuous	Short Time (120 minutes)	
		0.75 kW or above	IE3, GB3	Continuous	Continuous	
Gearbox	Reduction Method	Hypoid Gear and Helical Gear				
	Lubrication Type	Grease Lubrication (Maintenance-free)				
	Output Shaft	JIS Key (JIS B 1301-1996) (Plain form) * The key material is included with concentric right angle shaft types.				
	Output Shaft Material	Carbon Steel				
	Case Material	Aluminum				
Ambient Conditions	Ambient Temperature	-10 °C to 40 °C (Note 6)				
	Ambient Humidity	85 % max (No Condensation)				
	Altitude	1,000 m max				
	Installation Environment	A well ventilated place free from corrosive gas, explosive gas, vapor and/or chemicals Not to be exposed to direct rain. Not to be exposed to direct sunlight. The brake should not to be exposed to water, dust, oil/grease, or oil mist. Models with water protection rating IPX0 shall not be exposed directly to water.				
Paint	Paint Color	Gray				
Protective Structure (Note 7)		IP44 or IP40				IP40 or IP44
Mounting Direction		No limitations in mounting angle				
Motor Characteristics		P.445 (F3S Type), P.448 (F3F Type)				P.446
Performance Table		P.451 (F3S Type), P.457 (F3F Type)				P.454
Drawings		P.464				P.465

Note 1: Applicable motor power is 0.1 kW to 0.75 kW.
Note 2: Applicable motor power is 0.75 kW to 2.2 kW.
Note 3: Applicable motor power is 0.1 kW to 0.4 kW.
Note 4: Concentric right angle shaft types are not available in Single-Phase motors.
Note 5: For CCC Standard, Three-phase 0.2 kW and Three-phase 0.4 kW are certified under limited duty cycle. Please be cautious upon selecting the product.
Note 6: The ambient temperature for Single-phase motors with a power of 0.1 kW (capacitor run) is 0 °C to 40 °C.
Note 7: The protective structure differs depending on the model.

F2/F3 Type IP65 Gearmotors/IP65 Gearmotors with Brake <Concentric Right Angle Hollow Bore/F2S, F3S>

Series		MINI		MID			
Motor Unit	Number of Phases	3-Phase	1-Phase	3-Phase			
	Power	15 W to 90 W	15 W to 90 W	0.1 kW to 2.2 kW			
	Power Supply	Standard Voltage 200 V/50 Hz, 200 V/60 Hz, 220 V/60 Hz	Standard Voltage 100 V/50 Hz, 100 V/60 Hz	Type	Global Standards Conformance	Power Supply/ Frequency	
				Standard Voltage	UL/CE/CCC	200 V/50 Hz, 200 V/60 Hz, 220 V/60 Hz	
				High Voltage (400 V Class)	UL/CE/CCC	380 V/50 Hz, 400 V/50 Hz, 400 V/60 Hz, 440 V/60 Hz	
				Special Voltage	South Korea/ Taiwan UL/CE/CCC	220 V/60 Hz, 380 V/60 Hz (Dual Voltage)	
					China UL/CE/CCC	220 V/50 Hz, 230 V/50 Hz, 380 V/50 Hz (Dual Voltage)	
					China/South Korea/Taiwan UL/CE/CCC	220 V/50 Hz, 220 V/60 Hz, 380 V/50 Hz, 380 V/60 Hz (Dual Voltage) (Note 1)	
					Europe/North America UL/cUL/CE/CCC	415 V/50 Hz, 440 V/50 Hz, 480 V/60 Hz	
					North America/ Europe UL/cUL/CE/CCC	230 V/60 Hz, 460 V/60 Hz, 400 V/50 Hz (Dual Voltage) (Note 2)	
					North America/ Europe UL/cUL/CE/CCC	208 V/60 Hz, 230 V/60 Hz, 460 V/60 Hz, 400 V/50 Hz (Note 3)	
					Canada UL/cUL	575 V/60 Hz	
	Insulation Class	Ins. B		Ins. F			
	Startup Method	Direct Power Input	Capacitor Run	Direct Power Input			
	Cooling Method	Totally Enclosed Non-Ventilated (TENV) (IC410)		Totally Enclosed Fan Cooled (TEFC) (IC411) (All of 0.1 kW and 0.2 kW models without brake are totally enclosed non-ventilated (TENV) (IC410))			
	Number of Motor Poles	4					
	Rating	Continuous		Power	Motor Efficiency	UL/CE Standard	CCC Standard
				0.1 kW	IE1	Continuous	Continuous
				0.2 kW, 0.4 kW (Note 4)	IE2	Continuous	Short Time (120 minutes)
				0.75 kW or above	IE3, GB3	Continuous	Continuous
Gearbox	Reduction Method	Hypoid Gear and Helical Gear					
	Lubrication Type	Grease Lubrication (Maintenance-free)					
	Output Shaft	JIS Key (JIS B 1301-1996) (Plain form)					
	Output Shaft Material	Stainless Steel		Stainless steel or carbon steel			
	Case Material	Aluminum		Aluminum (Frame size 50: Aluminum Casting, Frame No. 55: Cast Iron)			
Ambient Conditions	Ambient Temperature	-10 °C to 40 °C					
	Ambient Humidity	100 % max (No Condensation)					
	Altitude	1,000 m max					
	Installation Environment	A place free from corrosive gas, explosive gas and/or vapor. Not to be exposed to strong rain or wind. Not to be exposed to direct sunlight. Not suitable for use under water, under environments with exposure to high pressure such as water splashes, and under exposure to cleansing chemicals.					
Paint	Paint Color	Gray					
Protective Structure		IP65					
Mounting Direction		No limitations in mounting angle					
Motor Characteristics		P.480		P.481			
Performance Table		P.482		P.484			
Drawings		P.487		P.489			

Note 1: Applicable motor power is 0.1 kW to 0.75 kW.
Note 2: Applicable motor power is 0.75 kW to 2.2 kW.
Note 3: Applicable motor power is 0.1 kW to 0.4 kW.
Note 4: For CCC Standard, Three-phase 0.2 kW and Three-phase 0.4 kW are certified under limited duty cycle. Please be cautious upon selecting the product.

F2 Type Speed Control Gearmotors <Concentric Right Angle Hollow Bore/F2S, Concentric Right Angle Shaft/F2F>

Series		MINI
Motor Unit	Number of Phases	1-Phase
	Power	15 W to 90 W
	Power Supply	Standard Voltage 100 V/50 Hz, 100 V/60 Hz High Voltage (200 V Class) 200 V/50 Hz, 200 V/60 Hz
	Insulation Class	Ins. B
	Startup Method	Capacitor Run
	Cooling Method	Totally Enclosed Non-Ventilated (TENV) (IC410) (60 to 90 W: provided with a forced fan)
	Number of Motor Poles	4
	Rating	Continuous
Gearbox	Reduction Method	Hypoid Gear and Helical Gear
	Lubrication Type	Grease Lubrication (Maintenance-free)
	Output Shaft	JIS Key (JIS B 1301-1996) (Plain form)
	Output Shaft Material	Carbon Steel
	Case Material	Aluminum
Ambient Conditions	Ambient Temperature	-10 °C to 40 °C
	Ambient Humidity	85 % max (No Condensation)
	Altitude	1,000 m max
	Installation Environment	A place free from corrosive gas, explosive gas and/or vapor. Well ventilated place with no dust.
	Installation Place	Indoors
Paint	Paint Color	Gray
Mounting Direction		No limitations in mounting angle
Motor Characteristics		P.494
Performance Table		P.496
Drawings		P.500

F3 Type Gearboxes (Double Shaft Type) <Concentric Right Angle Hollow Bore/F3S>

Series		MID
4 Poles Motor Power Class		0.1 kW Class to 2.2 kW Class
Gearbox	Reduction Method	Hypoid Gear and Helical Gear
	Lubrication Type	Grease Lubrication (Maintenance-free)
	Output Shaft	JIS Key (JIS B 1301-1996 plain form) * The key is not included with the motor.
	Input Shaft	JIS Key (JIS B 1301-1996 plain form) * The key is not included with the motor.
	Output Shaft Material	Carbon Steel
	Input Shaft Material	Carbon Steel
	Case Material	Aluminum
Ambient Conditions	Ambient Temperature	-10 °C to 40 °C
	Ambient Humidity	85 % max (No Condensation)
	Altitude	1,000 m max
	Installation Environment	A place free from corrosive gas, explosive gas and/or vapor. Well ventilated place with no dust.
	Installation Place	Indoors
Paint	Paint Color	Gray
Mounting Direction		No limitations in mounting angle
Performance Table		P.504
Drawings		P.506

F3 Type S-Type Gearboxes <Concentric Right Angle Hollow Bore/F3S>

Series		MID
4 Poles Motor Power Class		0.1 kW Class to 2.2 kW Class
Gearbox	Reduction Method	Hypoid Gear and Helical Gear
	Lubrication Type	Grease Lubrication (Maintenance-free)
	Output Shaft	JIS Key (JIS B 1301-1996) (Plain form) * Key not included.
	Output Shaft Material	Carbon Steel
	Case Material	Aluminum
Ambient Conditions	Ambient Temperature	-10 °C to 40 °C
	Ambient Humidity	85 % max (No Condensation)
	Altitude	1,000 m max
	Installation Environment	A place free from corrosive gas, explosive gas and/or vapor. Well ventilated place with no dust.
	Installation Place	Indoors
Paint	Paint Color	Gray
Mounting Direction		No limitations in mounting angle
Performance Table		P.510
Drawings		P.512

Model and Type Codes

F2 Type Gearmotors/Gearmotors with Brake MINI Series <Concentric Right Angle Hollow Bore/F2S, Concentric Right Angle Shaft/F2F>

Mounting Type	Motor Type		Frame Size	Shaft Arrangement		Reduction Ratio		Motor Power	Supply Voltage	Terminal Box	Option	Option Code
F2S	M	–	12		–	30	–	T25				
F2F	B	–	18	L	–	200	–	S60	W	C	X	T6
①	②		③	④		⑤		⑥	⑦	⑧	⑨	⑩

①Mounting Type	F2S : Concentric Right Angle Hollow Bore		
	F2F : Concentric Right Angle Shaft		
②Motor Type	M : With Motor		
	B : Brakemotor		
	MR : Motor with Simple Brake (option)		
③Frame Size and Output Shaft Diameter	Output Shaft Diameter		
④Shaft Arrangement	Concentric Right Angle Hollow Bore	Blank	
	Concentric Right Angle Shaft	Viewing from the input shaft, the output shaft would be on the left side 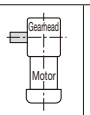	Viewing from the input shaft, the output shaft would be on the both sides 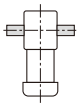
		L	T
⑤Reduction Ratio	10: 1/10 to 240: 1/240		
⑥Motor Power	T15 : 3-Phase 15 W		
	T25 : 3-Phase 25 W		
	T40 : 3-Phase 40 W		
	T60 : 3-Phase 60 W		
	T90 : 3-Phase 90 W		
	S15 : 1-Phase 15 W		
	S25 : 1-Phase 25 W		
	S40 : 1-Phase 40 W		
	S60 : 1-Phase 60 W		
	S90 : 1-Phase 90 W		
⑦Supply Voltage (High Voltage (400 V Class): is Option)	Blank : Standard Voltage 3-Phase: 200 V/50 Hz, 200 V/60 Hz, 220 V/60 Hz 1-Phase: 100 V/50 Hz, 100 V/60 Hz		
	W : High Voltage 3-Phase: 380 V/50 Hz, 400 V/50 Hz, 400 V/60 Hz, 440 V/60 Hz 1-Phase: 200 V/50 Hz, 200 V/60 Hz		
⑧Terminal Box (Option)	Blank : Flying Leads (Standard Type)		
	T : T Type Terminal Box		
	K : K Type Terminal Box		
	C : Terminal Box with Built-in Rectifier for Gearmotor with Brake (Note 1)		
⑨Option	Blank : Standard Specification		
	X : Special Specification Code		
⑩Option Code (Note 2)	Lead Wires/Terminal Box Position Code Please refer to the list of option codes on page 581 for details.		

Note 1: When using an inverter for a C type terminal box, be sure to designate an AC switching (A) connection.
Please refer to page 591 for details.

Note 2: The option code will not be shown in the nomenclature on the nameplate. But it will be shown in the Option code row of the nameplate.

■ F2F (right angle shaft) shaft arrangement

The L shaft of the F2F (concentric right angle shaft) is as shown in [Figure-1]. The F2 type is designed for concentric flange mount on both sides, and the output shaft can therefore be positioned on the right side as shown in [Figure-2] by rotating the gearmotor to 180 °.

In this case, however, the lead wires will be in the lower position. If you want to set the lead wires in the upper position for the convenience of use, place an order for the lead wire lower position (option code “T6”) for a standard product [Figure-1]. By rotating the gearmotor to 180 ° in this state, the output shaft will be positioned on the right side with the lead wires in the upper position. Please refer to page 581 for changes of the lead wire position.

<Figure when viewed from the motor side>

When the output shaft is an L shaft, it is on the left side when viewed from the motor side with the lead wires in the upper position.

[Figure-1] Lead Wire Position [Figure-2]

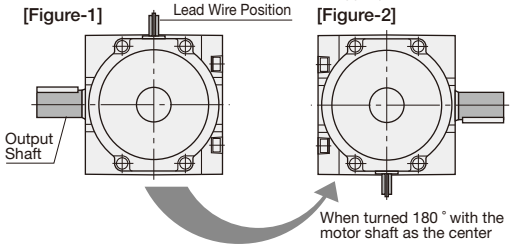

F3 Type Gearmotors/Gearmotors with Brake MID Series <Concentric Right Angle Hollow Bore/F3S, Concentric Right Angle Shaft/F3F> [3-Phase]

Gearhead Type					Motor Type							Brake Specifications	Option	
Mounting Type	Frame Size	Shaft Arrangement	Reduction Ratio		Motor Type	Motor Specifications	Motor Power	Number of Phases	Supply Voltage	Standards	Terminal Box	Brake	Option	Option Code
F3F	18	T	15	–	M	M	01	T	N	N	T	N		
F3S	35	N	100	–	M	M	04	T	W	N	T	B4	X	AA
F3S	55	N	240	–	M	R	15	T	K	N	T	B2	X	T9HZ
①	②	③	④		⑤	⑥	⑦	⑧	⑨	⑩	⑪	⑫	⑬	⑭

①Mounting Type	F3S : Concentric Right Angle Hollow Bore			
	F3F : Concentric Right Angle Shaft			
②Frame Size and Output Shaft Diameter	Output Shaft Diameter			
③Shaft Arrangement	Material	Shaft Arrangement		
		Right Angle Hollow Bore	Right Angle Shaft	
	Carbon Steel	N	Viewing from the input shaft (↑), the output shaft would be on the left side  L	Viewing from the input shaft (↑), the output shaft would be on the right side  R
				Viewing from the input shaft (↑), the output shaft would be on the both sides  T
④Reduction Ratio	5: 1/5 to 240: 1/240			
⑤Motor Type	M : Standard Induction Motor (IP40 or IP44)			
⑥Motor Specifications (Note 1)	M : IE1 Efficiency Ins. F (0.1 kW) IE2 Efficiency Ins. F (0.2 kW to 0.4 kW)			
	R : IE3 Efficiency Ins. F (0.75 kW to 2.2 kW)			
⑦Motor Power	01 : 0.1 kW			
	02 : 0.2 kW			
	04 : 0.4 kW			
	08 : 0.75 kW			
	15 : 1.5 kW			
	22 : 2.2 kW			
⑧Number of Phases	T : 3-Phase			

⑨Supply Voltage (Note 2)		⑫Brake Specifications (Note 3)				
		N	B2	B4	J2	J4
N	: 200 V/50 Hz, 200 V/60 Hz, 220 V/60 Hz	○	○		○	
W	: 380 V/50 Hz, 400 V/50 Hz, 400 V/60 Hz, 440 V/60 Hz	○		○		○
K	: 220 V/60 Hz, 380 V/60 Hz	○	○	○	○	○
C	: 220 V/50 Hz, 230 V/50 Hz, 380 V/50 Hz	○	○	○	○	○
D	: 220 V/50 Hz, 220 V/60 Hz, 380 V/50 Hz, 380 V/60 Hz	○	○	○	○	○
E	: 415 V/50 Hz, 440 V/50 Hz, 480 V/60 Hz	○		○		○
U	: 230 V/60 Hz, 460 V/60 Hz, 400 V/50 Hz	○	○	○	○	○
A	: 208 V/60 Hz, 230 V/60 Hz, 460 V/60 Hz, 400 V/50 Hz	○	○	○	○	○
M	: 575 V/60 Hz	○	○		○	

⑩Standards	N : CE/UL/CCC
	A : UL Note: Supply Voltage : M (575 V/60 Hz) only
⑪Terminal Box (Note 4)	T : T Type Terminal Box (Steel Plate)
	N : Flying Leads
⑫Brake Specifications (Note 5)	N : No Brake
	B2 : 200 V Class Brake
	B4 : 400 V Class Brake
	J2 : 200 V Class Brake with Manual Brake Release Lever (optional)
	J4 : 400 V Class Brake with Manual Brake Release Lever (optional)
⑬Option	Blank : Standard Specification
	X : Special Specification Code
⑭Option Code (Note 6)	Built-in Rectifier Connection Code Please refer to the list of option codes on page 561 for details.
	Terminal Box Position Code Please refer to the list of option codes on page 583 for details.
	Please refer to the option code list on page 1012 for codes used for other special options.

Note 1: For CCC Standard, 0.2 kW and 0.4 kW are certified under limited duty cycle. Please be cautious upon selecting the product.
Note 2: Refer to the following for the corresponding motor powers for supply voltages.
Supply voltage D: 0.1 kW to 0.75 kW Supply voltage U: 0.75 kW to 2.2 kW Supply voltage A: 0.1 kW to 0.4 kW
Dual voltage is not available for gearmotors with brake and supply the voltage code “K”, “C”, “D”, “U” and “A”.
The motor voltage is limited by the brake specifications.
Note 3: ○ indicates a brake specification that can be manufactured.
Note 4: With regard to the types of flying leads, only supply voltage codes N are covered.
Note 5: The rectifier is included with the product.
Note 6: The option code will not be shown in the nomenclature on the nameplate. But it will be shown in the Option code row of the nameplate.

F3 Type Gearmotors/Gearmotors with Brake MID Series <Concentric Right Angle Hollow Bore/ F3S> [1-Phase]

Gearhead Type					Motor Type							Brake Specifications	Option	
Mounting Type	Frame Size	Shaft Arrangement	Reduction Ratio		Motor Type	Motor Specifications	Motor Power	Number of Phases	Supply Voltage	Standards	Terminal Box	Brake	Option	Option Code
F3S	20	N	5	–	M	M	01	S	N	J	A	N		
F3S	30	N	120	–	M	M	02	C	W	J	A	B2		
F3S	35	N	80	–	M	M	04	C	N	J	A	B2	X	T9HZ
①	②	③	④		⑤	⑥	⑦	⑧	⑨	⑩	⑪	⑫	⑬	⑭

①Mounting Type (Note 1)	F3S : Concentric Right Angle Hollow Bore
②Frame Size and Output Shaft Diameter	Output Shaft (Internal Diameter)
③Shaft Arrangement	N : Concentric Right Angle Hollow Bore
④Reduction Ratio	5: 1/5 to 240: 1/240
⑤Motor Type	M : Standard Induction Motor (IP44 or IP40)
⑥Motor Specifications	M : IE1 Efficiency Ins. B
⑦Motor Power	01 : 0.1 kW
	02 : 0.2 kW
	04 : 0.4 kW
⑧Number of Phases	S : 1-Phase Capacitor Run (Note 2)
	C : 1-Phase Capacitor Start
⑨Supply Voltage (Note 3)	N : 100 V/50 Hz, 100 V/60 Hz
	W : 200 V/50 Hz, 200 V/60 Hz
⑩Standards	J : No Standards
⑪Terminal Box	A : A Type Terminal Box (Aluminum)
⑫Brake Specifications	N : No Brake
	B2 : 200 V Class Brake
⑬Option	Blank : Standard Specification
	X : Special Specification Code
⑭Option Code (Note 4)	Terminal Box Position Code Please refer to page 585 for details.

Note 1: Concentric right angle shaft types are not available.
Note 2: 1-phase capacitor run type motors have built-in thermal protectors.
Refer to page 643 for the cautions for use.
Note 3: For voltages/frequencies not listed above, please contact your nearest Sales Office or the CS Center.
Note 4: The option code will not be shown in the nomenclature on the nameplate. But it will be shown in the Option code row of the nameplate.

F2 Type IP65 Gearmotors/IP65 Gearmotors with Brake MINI Series <Concentric Right Angle Hollow Bore/ F2S>

Mounting Type	Motor Type		Frame Size		Reduction Ratio		Motor Power	Option	Option Code
F2S	W	–	12	–	30	–	T25		
F2S	V	–	15	–	200	–	S40	X	H3
①	②		③		④		⑤	⑥	⑦

①Mounting Type (Note 1)	F2S : Concentric Right Angle Hollow Bore
②Motor Type	W : IP65 Motor
	V : IP65 Brakemotor
③Frame Size and Output Shaft Diameter	Output Shaft Diameter
④Reduction Ratio	10: 1/10 to 240: 1/240
⑤Motor Power and Supply Voltage/ Frequency	T15 : 3-Phase 15 W
	T25 : 3-Phase 25 W
	T40 : 3-Phase 40 W
	T60 : 3-Phase 60 W
	T90 : 3-Phase 90 W
	S15 : 1-Phase 15 W
	S25 : 1-Phase 25 W
	S40 : 1-Phase 40 W
	3-Phase : 200 V/50 Hz, 200 V/60 Hz, 220 V/60 Hz 1-Phase : 100 V/50 Hz, 100 V/60 Hz
⑥Option	Blank : Standard Specification
	X : Special Specification Code
⑦Option Code (Note 2)	Cabtyre Cable Position Code Please refer to the list of option codes on page 581 for details.

Note 1: Concentric right angle shaft types are not available.
Note 2: The option code will not be shown in the nomenclature on the nameplate. But it will be shown in the Option code row of the nameplate.

F3 Type IP65 Gearmotors/IP65 Gearmotors with Brake MID Series <Concentric Right Angle Hollow Bore/ F3S> [3-Phase]

Gearhead Type					Motor Type							Brake Specifications	Option	
Mounting Type	Frame Size	Shaft Arrangement	Reduction Ratio		Motor Type	Motor Specifications	Motor Power	Number of Phases	Supply Voltage	Standards	Terminal Box	Brake	Option	Option Code
F3S	20	N	15	–	W	M	01	T	N	N	E	N		
F3S	35	S	100	–	W	M	04	T	W	N	E	V4	X	AA
F3S	55	N	240	–	W	R	15	T	K	N	E	N		
①	②	③	④		⑤	⑥	⑦	⑧	⑨	⑩	⑪	⑫	⑬	⑭

①Mounting Type (Note 1)	F3S : Concentric Right Angle Hollow Bore					
②Frame Size and Output Shaft Diameter	Output Shaft Diameter					
③Shaft Arrangement	Material	Shaft Arrangement: Right Angle Hollow Bore				
	Carbon Steel	N				
	Stainless Steel	S				
④Reduction Ratio	5: 1/5 to 240: 1/240					
⑤Motor Type	W : IP65 Induction Motor					
⑥Motor Specifications (Note 2)	M : IE1 Efficiency Ins. F (0.1 kW) IE2 Efficiency Ins. F (0.2 kW to 0.4 kW)					
	R : IE3 Efficiency Ins. F (0.75 kW to 2.2 kW)					
⑦Motor Power	01 : 0.1 kW					
	02 : 0.2 kW					
	04 : 0.4 kW					
	08 : 0.75 kW					
	15 : 1.5 kW					
	22 : 2.2 kW					
⑧Number of Phases (Note 3)	T : 3-Phase					
⑨Supply Voltage	⑨Supply Voltage (Note 4)	⑫Brake Specifications (Note 5) N	V2	V4		
	N : 200 V/50 Hz, 200 V/60 Hz, 220 V/60 Hz	○	○			
	W : 380 V/50 Hz, 400 V/50 Hz, 400 V/60 Hz, 440 V/60 Hz	○		○		
	K : 220 V/60 Hz, 380 V/60 Hz	○	○	○		
	C : 220 V/50 Hz, 230 V/50 Hz, 380 V/50 Hz	○	○	○		
	D : 220 V/50 Hz, 220 V/60 Hz, 380 V/50 Hz, 380 V/60 Hz	○	○	○		
	E : 415 V/50 Hz, 440 V/50 Hz, 480 V/60 Hz	○		○		
	U : 230 V/60 Hz, 460 V/60 Hz, 400 V/50 Hz	○	○	○		
	A : 208 V/60 Hz, 230 V/60 Hz, 460 V/60 Hz, 400 V/50 Hz	○	○	○		
	M : 575 V/60 Hz	○	○			
⑩Standards	N : CE/UL/CCC					
	A : UL * Supply Voltage : M (575 V/60 Hz) only					
⑪Terminal Box	E : E Type Terminal Box (Aluminum)					
⑫Brake Specifications	N : No Brake					
	V2 : IP65 200 V Class Brake (Note 6)					
	V4 : IP65 400 V Class Brake (Note 6)					
⑬Option	Blank : Standard Specification					
	X : Special Specification Code					
⑭Option Code (Note 7)	Built-in Rectifier Connection Code Please refer to the list of option codes on page 561 for details.					
	Terminal Box Position Code Please refer to the list of option codes on page 583 for details.					
	Please refer to the option code list on page 1012 for codes used for other special options.					

Note 1: Concentric right angle shaft types are not available.
Note 2: For CCC Standard, 0.2 kW and 0.4 kW are certified under limited duty cycle. Please be cautious upon selecting the product.
Note 3: Single-phase types are not available.
Note 4: Refer to the following for the corresponding motor powers for supply voltages.
Supply voltage D: 0.1 kW to 0.75 kW Supply voltage U: 0.75 kW to 2.2 kW Supply voltage A: 0.1 kW to 0.4 kW
Dual voltage is not available for gearmotors with brake and supply the voltage code “K”, “C”, “D”, “U” and “A”.
The motor voltage is limited by the brake specifications.
Note 5: ○ indicates a brake specification that can be manufactured.
Note 6: IP65 gearmotors with a brake are not available with motor powers of 1.5 kW and 2.2 kW.
Note 7: The option code will not be shown in the nomenclature on the nameplate. But it will be shown in the Option code row of the nameplate.

F2 Type Speed Control Gearmotors MINI Series <Concentric Right Angle Hollow Bore/F2S, Concentric Right Angle Shaft/F2F> [1-Phase]

Mounting Type	Motor Type		Frame Size	Shaft Arrangement		Reduction Ratio		Motor Power	Supply Voltage	Terminal Box	Option	Option Code
F2S	U	–	12		–	30	–	S25				
F2F	P	–	18	T	–	240	–	S90	W	C	X	
①	②		③	④		⑤		⑥	⑦	⑧	⑨	⑩

①Mounting Type	F2S : Concentric Right Angle Hollow Bore		
	F2F : Concentric Right Angle Shaft		
②Motor Type	U : U Type with Speed Control Motor (Controller Set)		
	P : P Type with Speed Control Motor (Controller: Sold Separately)		
③Frame Size and Output Shaft Diameter	Output Shaft Diameter		
④Shaft Arrangement	Concentric Right Angle Hollow Bore	Blank	
	Concentric Right Angle Shaft	Viewing from the input shaft, the output shaft would be on the left side 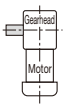	Viewing from the input shaft, the output shaft would be on the both sides 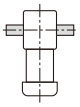
		L	T
⑤Reduction Ratio	10: 1/10 to 240: 1/240		
⑥Motor Power	S15 : 1-Phase 15 W		
	S25 : 1-Phase 25 W		
	S40 : 1-Phase 40 W		
	S60 : 1-Phase 60 W		
	S90 : 1-Phase 90 W		
⑦Supply Voltage (High Voltage (200 V Class): is Option)	Blank : Standard Voltage 1-Phase 100 V/50 Hz, 100 V/60 Hz		
	W : High Voltage 1-Phase 200 V/50 Hz, 200 V/60 Hz		
⑧Terminal Box (Option) (Note 1)	Blank : Flying Leads (Standard Type)		
	C : Terminal Box for P Type		
⑨Option	Blank : Standard Specification		
	X : Special Specification Code		
⑩Option Code (Note 2)	Lead Wires/Terminal Box Position Code Please refer to the list of option codes on page 581 for details.		

Note 1: Please refer to page 639 for the specifications of terminal boxes.
Note 2: The option code will not be shown in the nomenclature on the nameplate. But it will be shown in the Option code row of the nameplate.

Controllers

■ Type Code

Part Number			Supply Voltage	Function	Part Number
SC	P	–	10	1	L

- Part Number L: Blank : U Type; L : P Type
- Function: 0: Only Variable Speed (Only U Type); 1: Variable Speed + Instant Stop; 2: Variable Speed + Instant Stop + Slow Start/Slow Down; 3: Variable Speed + Instant Stop + Slow Start/Slow Down + Parallel Operation
- Voltage: 10: 1-Phase 100 V; 20: 1-Phase 200 V
- P: U: U Type (sold in set with gearmotor); P: P Type (sold separately from gearmotor)
- SC: SC: Generic name for Speed Controller

F3 Type Gearboxes (Double Shaft Type) MID Series <Concentric Right Angle Hollow Bore/F3S>

Mounting Type	Motor Type		Frame Size		Reduction Ratio		Motor Power Class	Option	Terminal Box	Option	Option Code
F3S		–	30	–	50	–	040				
F3S		–	45	–	240	–	075			X	
①	②		③		④		⑤	⑥	⑦	⑧	⑨

①Mounting Type (Note 1)	F3S : Concentric Right Angle Hollow Bore
②Motor Type	Blank : Without Motor (Double Shaft Type)
③Frame Size and Output Shaft Diameter	Output Shaft Diameter (Internal Diameter)
④Reduction Ratio	5: 1/5 240: 1/240
⑤Motor Power Class	010 : 0.1 kW Class
	020 : 0.2 kW Class
	040 : 0.4 kW Class
	075 : 0.75 kW Class
	150 : 1.5 kW Class
	220 : 2.2 kW Class
⑥ ⑦Options	Blank : Standard Specification There is no applicable option.
⑧Option	Blank : Standard Specification
	X : Special Specification Code
⑨Option Code (Note 2)	Blank : Standard Specification

Note 1: Right angle shaft types are not available.
Note 2: The option code will not be shown in the nomenclature on the nameplate. But it will be shown in the Option code row of the nameplate.

F3 Type S-Type Gearboxes MID Series <Concentric Right Angle Hollow Bore/F3S>

Mounting Type		Motor Type		Frame Size		Reduction Ratio		Motor Power Class	Option	Terminal Box	Option
F3S	–	S	–	30	–	50	–	040			
F3S	–	S	–	45	–	240	–	075			X
①		②		③		④		⑤	⑥	⑦	⑧

①Mounting Type (Note 1)	F3S : Right Angle Hollow Bore
②Motor Type	S : Gearbox designed for Designated Motor (S-Type)
③Frame Size and Output Shaft Diameter	Output Shaft Diameter (Hollow Bore Size)
④Reduction Ratio	5: 1/5 240: 1/240
⑤Motor Power Class	010 : 0.1 kW Class
	020 : 0.2 kW Class
	040 : 0.4 kW Class
	075 : 0.75 kW Class
	150 : 1.5 kW Class
	220 : 2.2 kW Class
⑥ ⑦Options	Blank : Standard Specification
⑧Option	Blank : Standard Specification
	X : Special Specification Code

Note 1: Right angle shaft types are not available.

F2 Type Gearmotors/Gearmotors with Brake MINI Series <Concentric Right Angle Hollow Bore/ F2S>

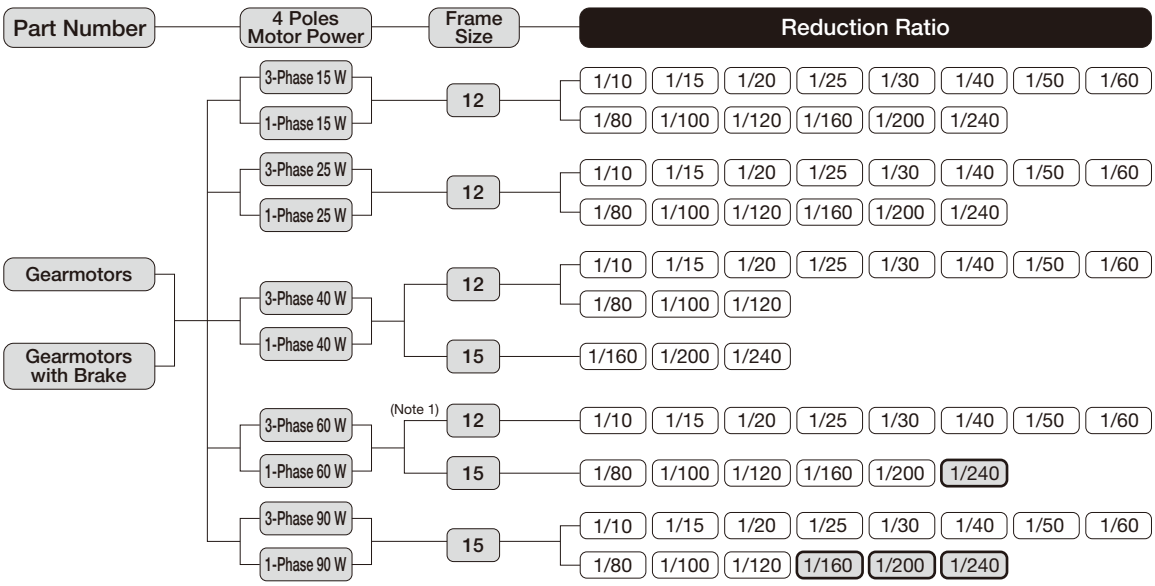

Note 1: The frame size for types other than Three-phase standard voltage types will be 15. The frame size for all Single-phase types is 15.
Note 2: ⬭ indicates a limited torque type. Please make sure to check the allowable output shaft torque in the performance table.

F3 Type Gearmotors/Gearmotors with Brake MID Series <Concentric Right Angle Hollow Bore/ F3S>

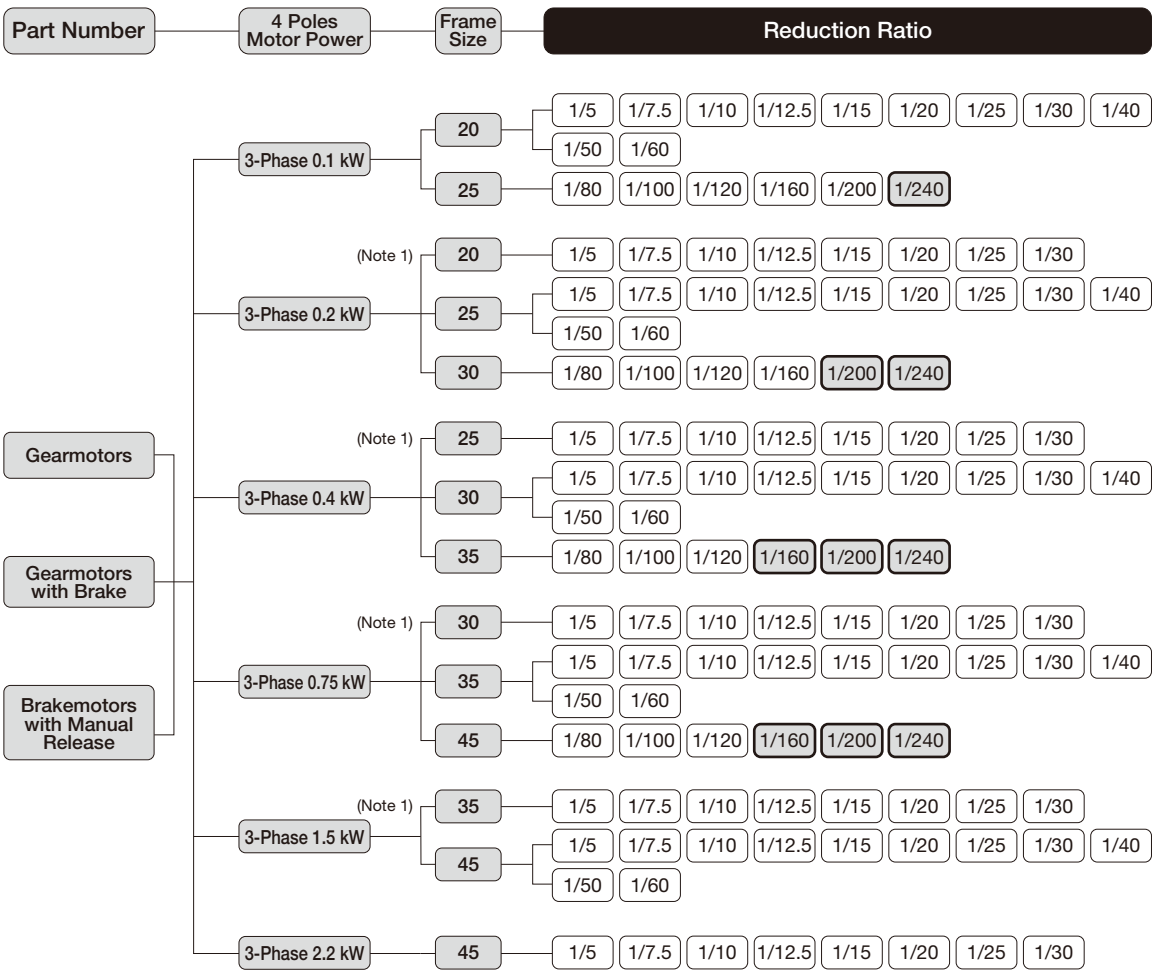

Note 1: Small frame size type.
Note 2: ▭ indicates a limited torque type. Please make sure to check the allowable output shaft torque in the performance table.

F3 Type Gearmotors/Gearmotors with Brake MID Series <Concentric Right Angle Hollow Bore/ F3S>

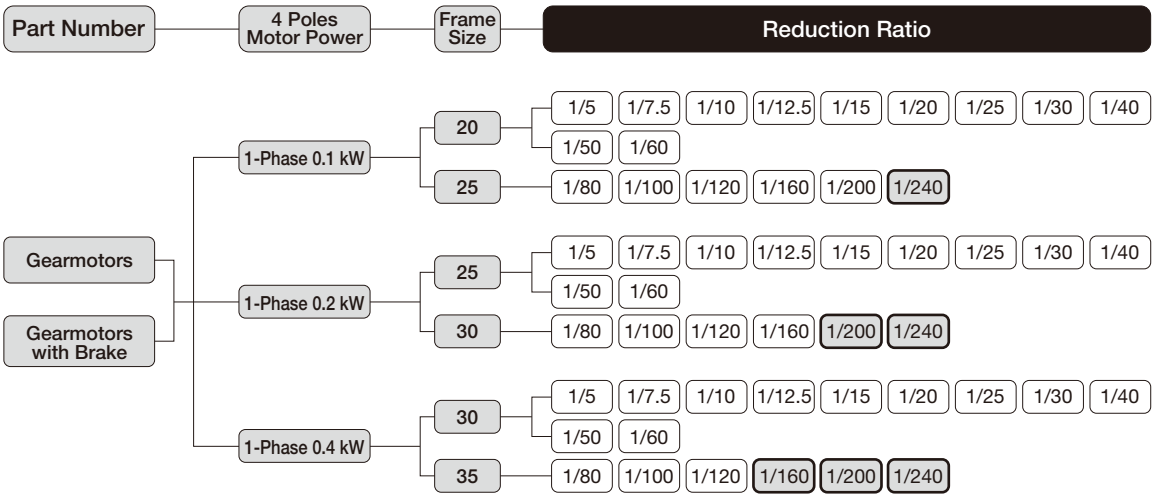

Note 1: ▭ indicates a limited torque type. Please make sure to check the allowable output shaft torque in the performance table.

F2 Type Gearmotors/Gearmotors with Brake MINI Series <Concentric Right Angle Shaft/ F2F>

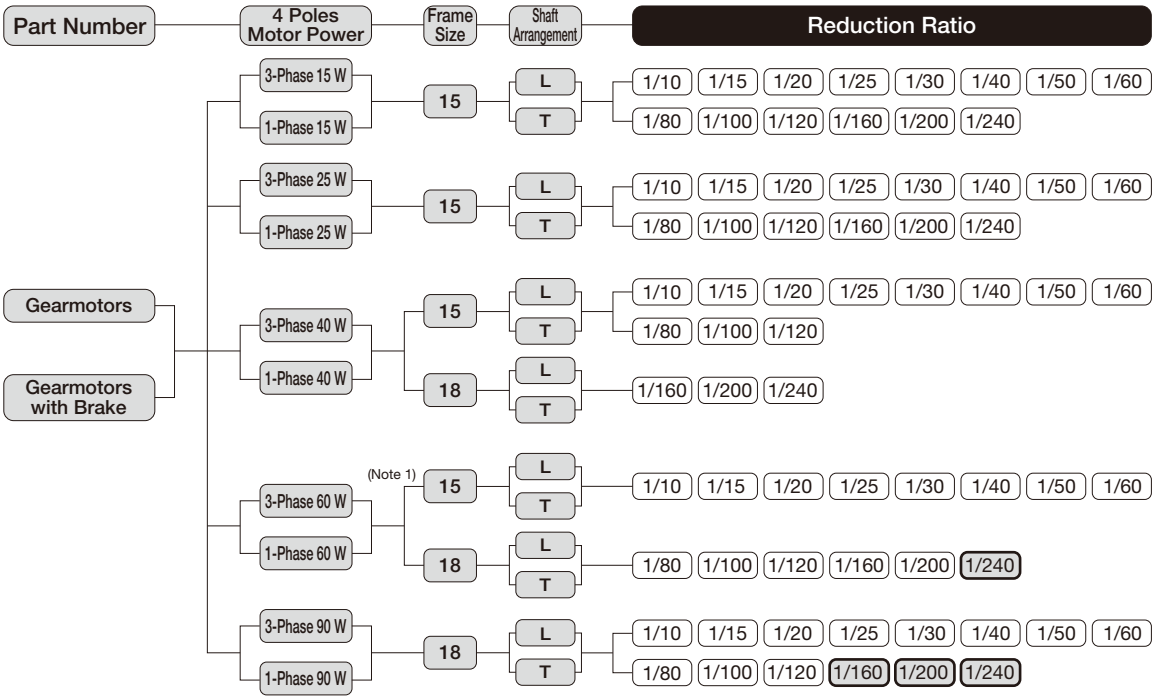

Note 1: The frame size for types other than Three-phase standard voltage types is 18. The frame size for all Single-phase types is 18.
Note 2: ⬭ indicates a limited torque type. Please make sure to check the allowable output shaft torque in the performance table.

F3 Type Gearmotors/Gearmotors with Brake MID Series <Concentric Right Angle Shaft/ F3F>

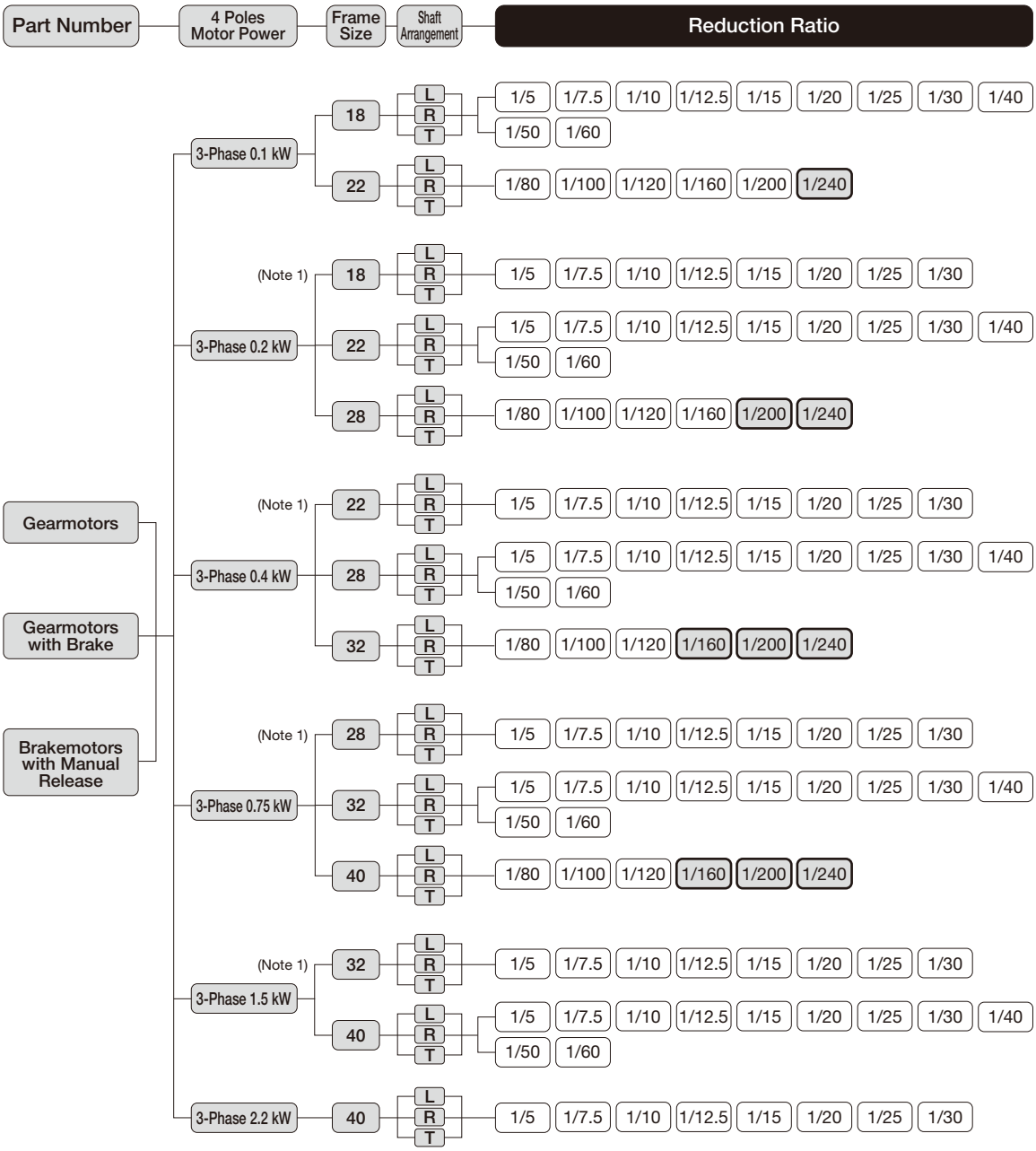

Note 1: Small frame size type.
Note 2: ▭ indicates a limited torque type. Please make sure to check the allowable output shaft torque in the performance table.

F2 Type IP65 Gearmotors/IP65 Gearmotors with Brake MINI Series <Concentric Right Angle Hollow Bore/ F2S>

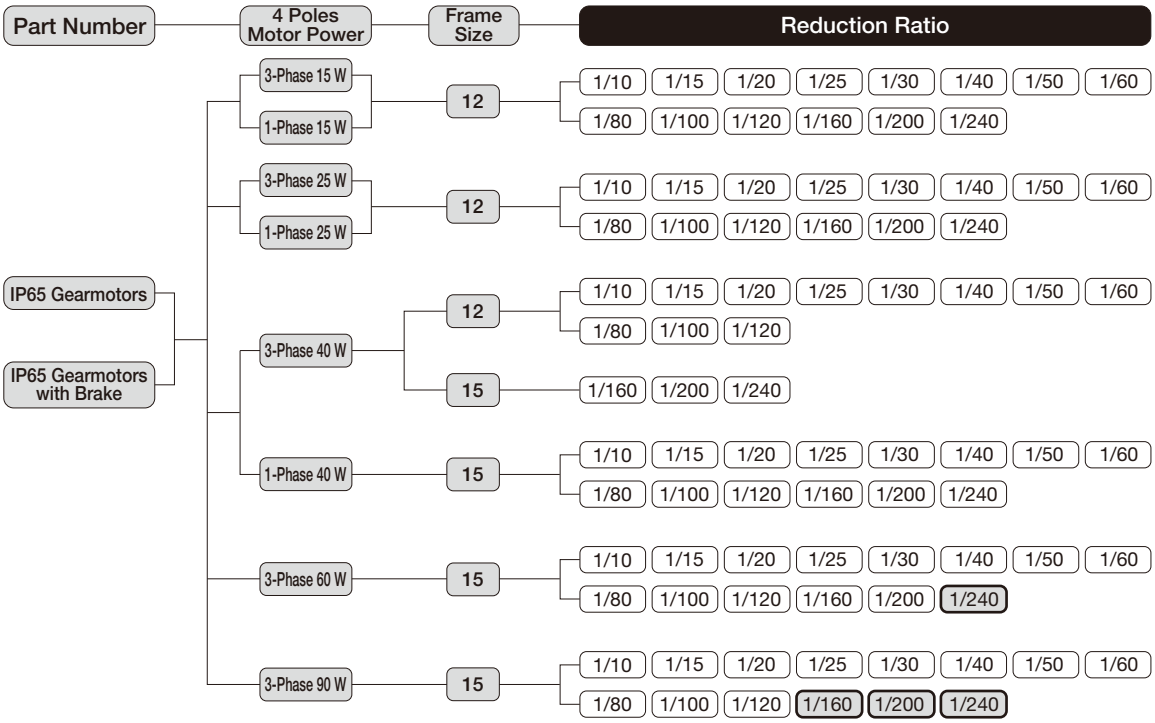

Note 1: Single-phase types are not available for 60 W and 90 W.
Note 2: ⬭ indicates a limited torque type. Please make sure to check the allowable output shaft torque in the performance table.

F3 Type IP65 Gearmotors/IP65 Gearmotors with Brake MID Series <Concentric Right Angle Hollow Bore/ F3S>

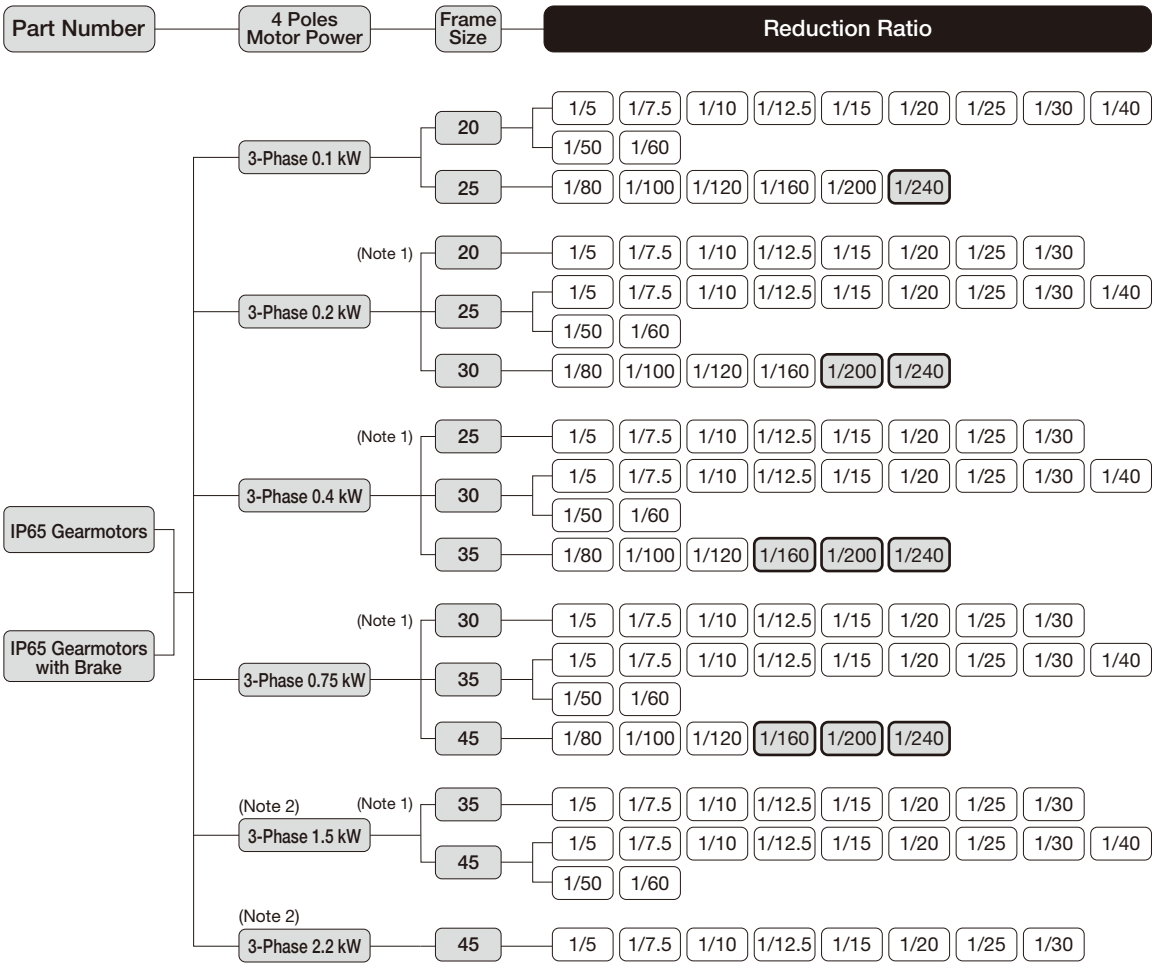

Note 1: Small frame size type.
Note 2: IP65 gearmotors with a brake are not available with motor powers of 1.5 kW and 2.2 kW.
Note 3: ▭ indicates a limited torque type. Please make sure to check the allowable output shaft torque in the performance table.

F2 Type Speed Control Gearmotors MINI Series <Concentric Right Angle Hollow Bore/F2S>

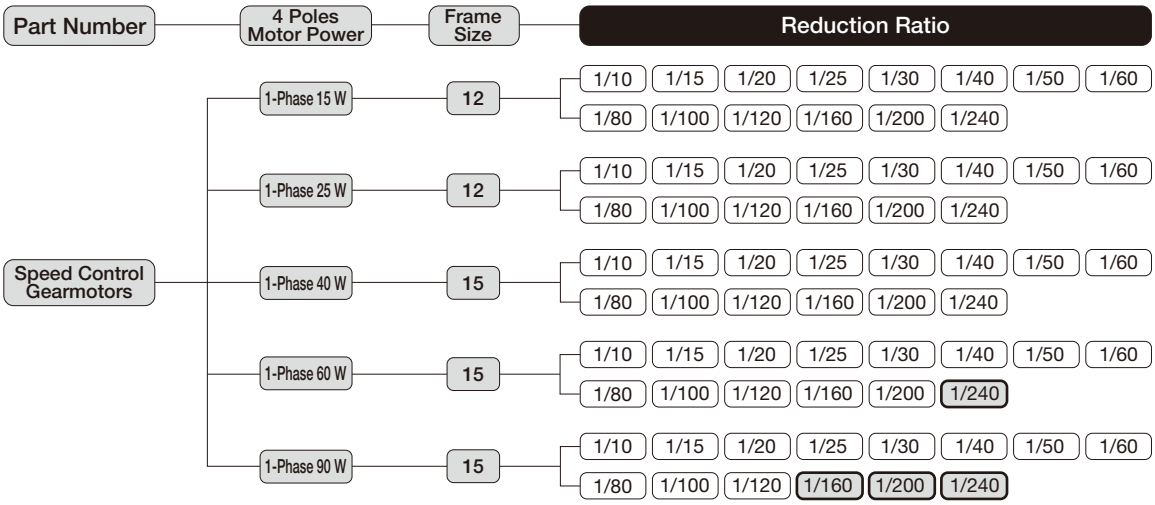

Note 1: ⬭ indicates a limited torque type. Please make sure to check the allowable output shaft torque in the performance table.

F2 Type Speed Control Gearmotors MINI Series <Concentric Right Angle Shaft/F2F>

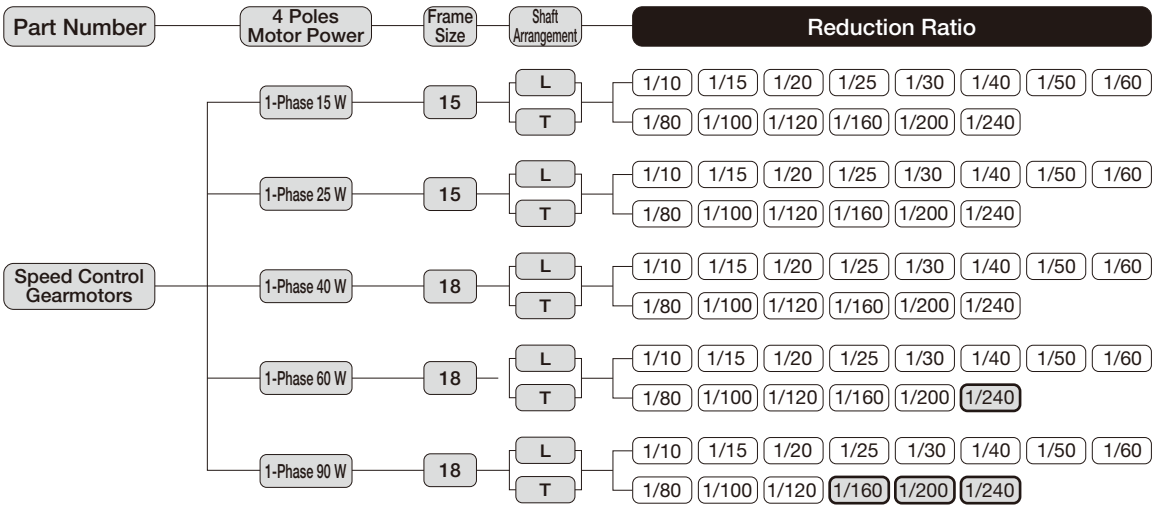

Note 1: ⬭ indicates a limited torque type. Please make sure to check the allowable output shaft torque in the performance table.

F3 Type Gearboxes (Double Shaft Type) MID Series <Concentric Right Angle Hollow Bore/F3S>

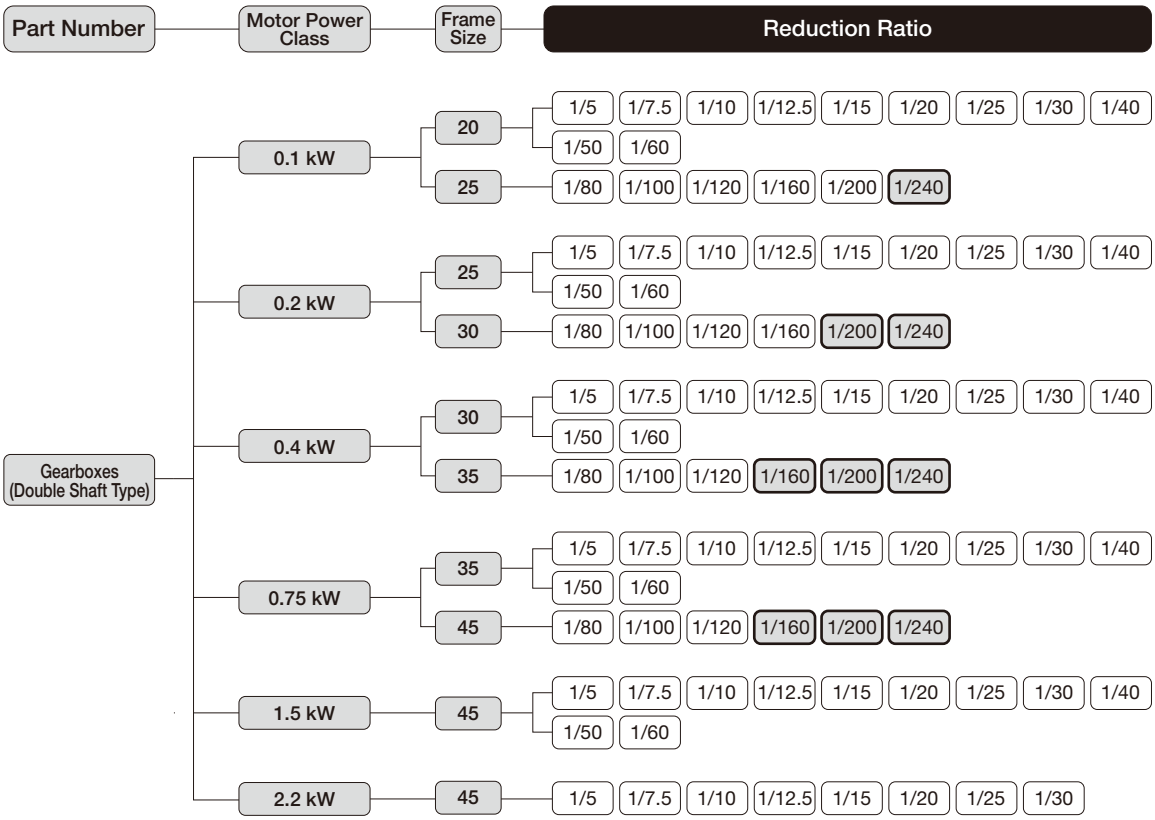

Note 1: ▭ indicates a limited torque type. Please make sure to check the allowable output shaft torque in the performance table.

F3 Type S-Type Gearboxes MID Series <Concentric Right Angle Hollow Bore/F3S>

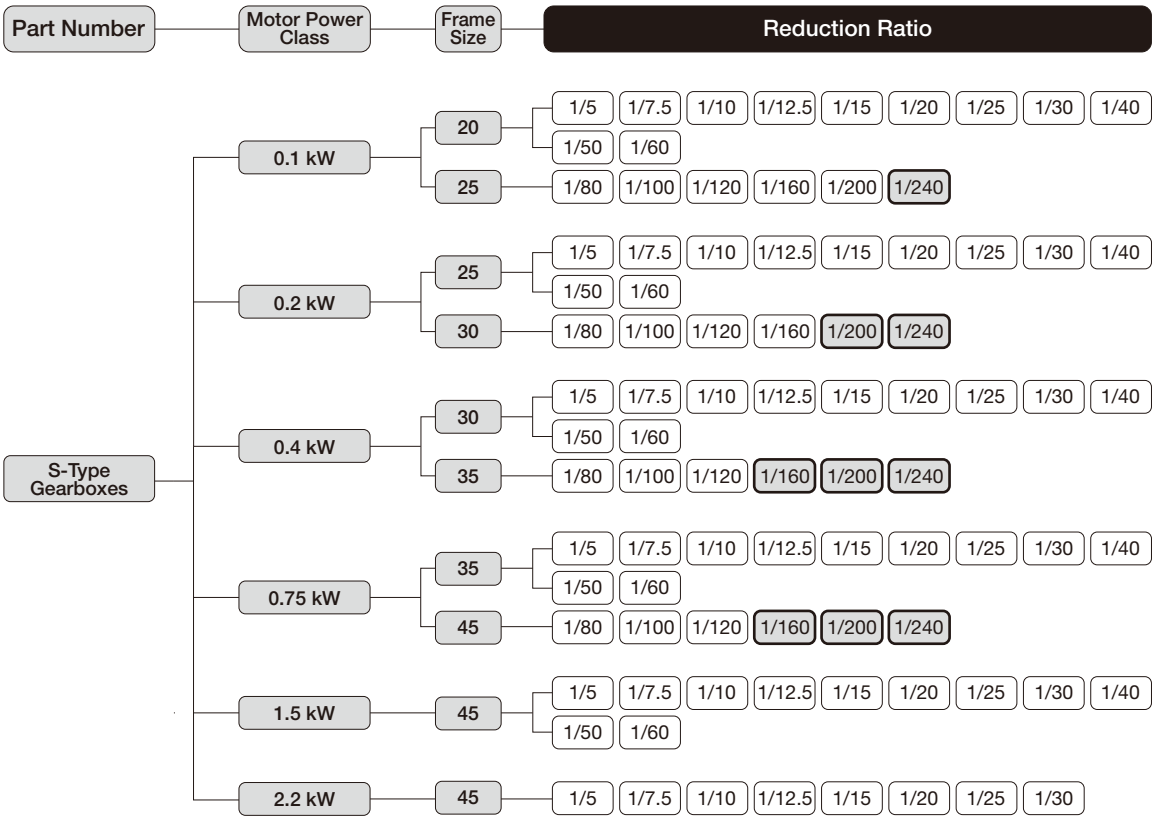

Note 1: ▭ indicates a limited torque type. Please make sure to check the allowable output shaft torque in the performance table.

MEMO

1. Gearmotors
Gearmotors with Brake

1-1. Motor Characteristics Table

F2 Type 3-Phase Standard Voltage <Concentric Right Angle Hollow Bore/F2S>

Series	Power (W)	Voltage (V)	Frequency (Hz)	Frame Size	Rated Current (A)	Rated Speed (r/min)	Startup Current (A)
MINI	15	200/200/220	50/60/60	12	0.14/0.13/0.13	1350/1550/1600	0.30/0.28/0.31
	25	200/200/220	50/60/60	12	0.21/0.19/0.19	1350/1550/1600	0.44/0.42/0.46
	40	200/200/220	50/60/60	12	0.29/0.27/0.27	1350/1550/1600	0.67/0.62/0.68
				15	0.27/0.26/0.26	1350/1550/1550	0.73/0.69/0.76
	60	200/200/220	50/60/60	12	0.42/0.39/0.39	1350/1550/1550	0.94/0.86/1.00
				15	0.40/0.36/0.36	1350/1550/1600	1.04/0.97/1.07
	90	200/200/220	50/60/60	15	0.51/0.48/0.48	1350/1550/1550	1.42/1.36/1.49

F2 Type 3-Phase High Voltage (400 V Class) <Concentric Right Angle Hollow Bore/F2S>

Series	Power (W)	Voltage (V)	Frequency (Hz)	Frame Size	Rated Current (A)	Rated Speed (r/min)	Startup Current (A)
MINI	15	380/400/400/440	50/50/60/60	12	0.11/0.12/0.10/0.11	1400/1400/1700/1700	0.26/0.28/0.26/0.29
	25	380/400/400/440	50/50/60/60	12	0.11/0.12/0.11/0.12	1350/1400/1600/1650	0.26/0.28/0.26/0.29
	40	380/400/400/440	50/50/60/60	12	0.14/0.14/0.14/0.14	1300/1350/1550/1600	0.30/0.32/0.30/0.33
				15	0.13/0.14/0.13/0.14	1300/1350/1550/1600	0.33/0.35/0.33/0.37
	60	380/400/400/440	50/50/60/60	15	0.17/0.17/0.17/0.17	1300/1350/1550/1600	0.43/0.45/0.43/0.47
	90	380/400/400/440	50/50/60/60	15	0.26/0.26/0.26/0.26	1300/1350/1550/1600	0.70/0.74/0.69/0.77

F2 Type 1-Phase Standard Voltage <Concentric Right Angle Hollow Bore/F2S>

Series	Power (W)	Voltage (V)	Frequency (Hz)	Frame Size	Rated Current (A)	Rated Speed (r/min)	Startup Current (A)	Capacitor (μF)
MINI	15	100/100	50/60	12	0.39/0.35	1350/1650	0.72/0.67	5
	25	100/100	50/60	12	0.48/0.48	1350/1600	0.86/0.80	7
	40	100/100	50/60	12	0.67/0.80	1400/1650	1.26/1.23	12
				15	0.61/0.66	1350/1650	1.43/1.36	10
	60	100/100	50/60	15	0.90/1.00	1350/1600	2.11/1.98	15
	90	100/100	50/60	15	1.30/1.40	1350/1600	2.89/2.68	20

F2 Type 1-Phase High Voltage (200 V Class) <Concentric Right Angle Hollow Bore/F2S>

Series	Power (W)	Voltage (V)	Frequency (Hz)	Frame Size	Rated Current (A)	Rated Speed (r/min)	Startup Current (A)	Capacitor (μF)
MINI	15	200/200	50/60	12	0.21/0.19	1350/1650	0.35/0.33	1.2
	25	200/200	50/60	12	0.26/0.25	1350/1600	0.47/0.44	1.7
	40	200/200	50/60	12	0.34/0.33	1350/1600	0.66/0.60	2.5
				15	0.29/0.34	1350/1600	0.64/0.61	2.5
	60	200/200	50/60	15	0.45/0.48	1350/1600	1.06/1.00	3.5
	90	200/200	50/60	15	0.65/0.66	1350/1600	1.44/1.35	5

The rated current in the motor characteristics table is the current data for the motor operating without a gearbox.
With regard to gearmotors with a brake, it is necessary to consider the current value flowing through the brake as needed.
For more details, please contact your nearest Sales Office or the CS Center.

F3 Type 3-Phase Standard Voltage/High Voltage (400 V Class)/Special Voltage <Concentric Right Angle Hollow Bore/F3S>

Series	Power	Power Supply/ Certification Codes	Voltage (V)	Frequency (Hz)	Rated Current (A)	Startup Current (A)	Rated Speed (r/min)
MID	0.1kW	NN	200/200/220	50/60/60	0.61/0.54/0.54	2.39/2.27/2.52	1410/1690/1710
		WN	380/400/400/440	50/50/60/60	0.31/0.31/0.28/0.28	1.12/1.18/1.12/1.22	1400/1410/1690/1720
		KN	220/380	60/60	0.52/0.30	1.90/1.10	1680/1680
		CN	220/230/380	50/50/50	0.55/0.54/0.31	1.94/2.03/1.12	1400/1410/1400
		DN	220/220/380/380	50/60/50/60	0.55/0.52/0.31/0.30	1.94/1.90/1.12/1.10	1400/1680/1400/1680
		EN	415/440/480	50/50/60	0.30/0.29/0.26	1.06/1.12/1.17	1390/1420/1720
		AN	208/230/460/400	60/60/60/50	0.54/0.57/0.29/0.31	2.35/2.62/1.26/1.21	1690/1730/1730/1410
		MA	575	60	0.20	0.87	1700
	0.2 kW IE2	NN	200/200/220	50/60/60	1.1/1.0/1.0	4.70/4.35/4.85	1400/1680/1700
		WN	380/400/400/440	50/50/60/60	0.56/0.56/0.50/0.50	2.29/2.38/2.29/2.48	1390/1400/1680/1710
		KN	220/380	60/60	0.93/0.52	3.70/2.20	1680/1680
		CN	220/230/380	50/50/50	0.99/0.98/0.56	3.97/4.15/2.29	1400/1410/1390
		DN	220/220/380/380	50/60/50/60	0.99/0.93/0.56/0.52	3.97/3.70/2.29/2.20	1400/1680/1390/1680
		EN	415/440/480	50/50/60	0.50/0.50/0.45	1.75/1.86/2.00	1370/1400/1700
		AN	208/230/460/400	60/60/60/50	1.0/1.0/0.50/0.56	4.78/5.16/2.56/2.44	1680/1720/1720/1400
		MA	575	60	0.40	1.78	1710
	0.4 kW IE2	NN	200/200/220	50/60/60	2.1/1.8/1.8	9.50/8.60/9.60	1400/1680/1700
		WN	380/400/400/440	50/50/60/60	1.0/1.0/0.9/0.9	4.35/4.65/4.30/4.75	1390/1400/1680/1710
		KN	220/380	60/60	1.7/1.0	7.10/4.09	1670/1670
		CN	220/230/380	50/50/50	1.8/1.8/1.0	7.63/7.88/4.43	1390/1400/1390
		DN	220/220/380/380	50/60/50/60	1.8/1.7/1.0/1.0	7.63/7.10/4.43/4.09	1390/1670/1390/1670
		EN	415/440/480	50/50/60	0.96/0.95/0.82	3.96/4.20/4.20	1390/1410/1680
		AN	208/230/460/400	60/60/60/50	1.8/1.8/0.9/1.0	8.90/9.76/4.73/4.78	1680/1720/1720/1400
		MA	575	60	0.68	3.51	1700
	0.75 kW IE3	NN	200/200/220	50/60/60	3.5/3.2/3.1	21.8/19.0/21.1	1450/1740/1750
		WN	380/400/400/440	50/50/60/60	1.73/1.72/1.58/1.54	10.2/10.8/9.8/10.7	1440/1450/1740/1750
		KN	220/380	60/60	2.9/1.7	16.9/9.8	1740/1740
		CN	220/230/380	50/50/50	3.0/3.0/1.7	17.8/18.7/10.3	1450/1450/1440
		DN	220/220/380/380	50/60/50/60	3.1/2.9/1.8/1.7	19.3/16.9/11.2/9.8	1450/1740/1450/1740
		EN	415/440/480	50/50/60	1.54/1.52/1.36	8.6/9.3/9.0	1440/1450/1750
		UN	230/460/400	60/60/50	3.1/1.5/1.7	22.3/11.2/10.8	1760/1760/1450
		MA	575	60	1.16	7.2	1750
	1.5 kW IE3	NN	200/200/220	50/60/60	6.7/6.1/5.9	45.6/40.3/45.1	1450/1740/1760
		WN	380/400/400/440	50/50/60/60	3.4/3.4/3.1/3.0	21.9/23.2/20.4/22.8	1450/1450/1750/1760
		KN	220/380	60/60	5.9/3.4	45.1/25.8	1760/1760
		CN	220/230/380	50/50/50	5.9/5.9/3.4	38.5/40.4/22.1	1450/1450/1450
		EN	415/440/480	50/50/60	3.1/3.1/2.8	20.8/22.2/21.2	1450/1460/1760
		UN	230/460/400	60/60/50	5.9/2.9/3.3	44.9/22.6/23.2	1760/1760/1450
		MA	575	60	2.2	17.0	1760
	2.2 kW IE3	NN	200/200/220	50/60/60	9.3/8.6/8.2	70.3/56.9/63.7	1470/1760/1770
		WN	380/400/400/440	50/50/60/60	4.5/4.4/4.2/3.9	30.0/32.0/25.0/28.0	1440/1450/1740/1750
		KN	220/380	60/60	8.3/4.8	65.0/38.0	1770/1770
		CN	220/230/380	50/50/50	7.9/7.7/4.5	52.0/54.3/30.0	1460/1470/1440
		EN	415/440/480	50/50/60	4.3/4.3/3.8	33.1/35.5/29.8	1460/1470/1770
		UN	230/460/400	60/60/50	7.9/4.0/4.5	65.2/34.8/36.3	1770/1770/1470
		MA	575	60	3.3	24.4	1760

The rated current in the motor characteristics table is the current data for the motor operating without a gearbox.
With regard to gearmotors with a brake, it is necessary to consider the current value flowing through the brake as needed.
For more details, please contact your nearest Sales Office or the CS Center.

F3 Type 1-Phase Standard Voltage <Concentric Right Angle Hollow Bore/F3S>

Series	Power	Startup Method	Voltage (V)	Frequency (Hz)	Rated Current (A)	Startup Current (A)	Rated Speed (r/min)	Startup Torque (%)	Breakdown Torque (%)
MID	0.1 kW	Capacitor Run	100/100	50/60	1.7/1.9	4.40/4.07	1400/1700	60/70	165/172
	0.2 kW	Capacitor Start	100/100	50/60	5.1/4.5	20.0/20.0	1420/1700	276/294	194/187
	0.4 kW	Capacitor Start	100/100	50/60	8.7/7.9	32.0/32.0	1440/1730	210/205	189/178

The rated current in the motor characteristics table is the current data for the motor operating without a gearbox.
With regard to gearmotors with a brake, it is necessary to consider the current value flowing through the brake as needed.
For more details, please contact your nearest Sales Office or the CS Center.

F3 Type 1-Phase High Voltage (200 V Class) <Concentric Right Angle Hollow Bore/F3S>

Series	Power	Startup Method	Voltage (V)	Frequency (Hz)	Rated Current (A)	Startup Current (A)	Rated Speed (r/min)	Startup Torque (%)	Breakdown Torque (%)
MID	0.1 kW	Capacitor Run	200/200	50/60	0.82/0.96	2.10/2.00	1410/1700	65/81	163/178
	0.2 kW	Capacitor Start	200/200	50/60	2.5/2.2	10.0/10.0	1420/1700	254/250	203/205
	0.4 kW	Capacitor Start	200/200	50/60	4.3/3.9	19.0/18.0	1440/1730	181/190	240/217

The rated current in the motor characteristics table is the current data for the motor operating without a gearbox.
With regard to gearmotors with a brake, it is necessary to consider the current value flowing through the brake as needed.
For more details, please contact your nearest Sales Office or the CS Center.

F2 Type 3-Phase Standard Voltage <Concentric Right Angle Shaft/F2F>

Series	Power (W)	Voltage (V)	Frequency (Hz)	Frame Size	Rated Current (A)	Rated Speed (r/min)	Startup Current (A)
MINI	15	200/200/220	50/60/60	15	0.14/0.13/0.13	1350/1550/1600	0.30/0.28/0.31
	25	200/200/220	50/60/60	15	0.21/0.19/0.19	1350/1550/1600	0.44/0.42/0.46
	40	200/200/220	50/60/60	15	0.29/0.27/0.27	1350/1550/1600	0.67/0.62/0.68
				18	0.27/0.26/0.26	1350/1550/1550	0.73/0.69/0.76
	60	200/200/220	50/60/60	15	0.42/0.39/0.39	1350/1550/1550	0.94/0.86/1.00
				18	0.40/0.36/0.36	1350/1550/1600	1.04/0.97/1.07
	90	200/200/220	50/60/60	18	0.51/0.48/0.48	1350/1550/1550	1.42/1.36/1.49

F2 Type 3-Phase High Voltage (400 V Class) <Concentric Right Angle Shaft/F2F>

Series	Power (W)	Voltage (V)	Frequency (Hz)	Frame Size	Rated Current (A)	Rated Speed (r/min)	Startup Current (A)
MINI	15	380/400/400/440	50/50/60/60	15	0.11/0.12/0.10/0.11	1400/1400/1700/1700	0.26/0.28/0.26/0.29
	25	380/400/400/440	50/50/60/60	15	0.11/0.12/0.11/0.12	1350/1400/1600/1650	0.26/0.28/0.26/0.29
	40	380/400/400/440	50/50/60/60	15	0.14/0.14/0.14/0.14	1300/1350/1550/1600	0.30/0.32/0.30/0.33
				18	0.13/0.14/0.13/0.14	1300/1350/1550/1600	0.33/0.35/0.33/0.37
	60	380/400/400/440	50/50/60/60	18	0.17/0.17/0.17/0.17	1300/1350/1550/1600	0.43/0.45/0.43/0.47
	90	380/400/400/440	50/50/60/60	18	0.26/0.26/0.26/0.26	1300/1350/1550/1600	0.70/0.74/0.69/0.77

F2 Type 1-Phase Standard Voltage <Concentric Right Angle Shaft/F2F>

Series	Power (W)	Voltage (V)	Frequency (Hz)	Frame Size	Rated Current (A)	Rated Speed (r/min)	Startup Current (A)	Capacitor (μF)
MINI	15	100/100	50/60	15	0.39/0.35	1350/1650	0.72/0.67	5
	25	100/100	50/60	15	0.48/0.48	1350/1600	0.86/0.80	7
	40	100/100	50/60	15	0.67/0.80	1400/1650	1.26/1.23	12
				18	0.61/0.66	1350/1650	1.43/1.36	10
	60	100/100	50/60	18	0.90/1.00	1350/1600	2.11/1.98	15
	90	100/100	50/60	18	1.30/1.40	1350/1600	2.89/2.68	20

F2 Type 1-Phase High Voltage (200 V Class) <Concentric Right Angle Shaft/F2F>

Series	Power (W)	Voltage (V)	Frequency (Hz)	Frame Size	Rated Current (A)	Rated Speed (r/min)	Startup Current (A)	Capacitor (μF)
MINI	15	200/200	50/60	15	0.21/0.19	1350/1650	0.35/0.33	1.2
	25	200/200	50/60	15	0.26/0.25	1350/1600	0.47/0.44	1.7
	40	200/200	50/60	15	0.34/0.33	1350/1600	0.66/0.60	2.5
				18	0.29/0.34	1350/1600	0.64/0.61	2.5
	60	200/200	50/60	18	0.45/0.48	1350/1600	1.06/1.00	3.5
	90	200/200	50/60	18	0.65/0.66	1350/1600	1.44/1.35	5

The rated current in the motor characteristics table is the current data for the motor operating without a gearbox.
With regard to gearmotors with a brake, it is necessary to consider the current value flowing through the brake as needed.
For more details, please contact your nearest Sales Office or the CS Center.

F3 Type 3-Phase Standard Voltage/High Voltage (400 V Class)/Special Voltage <Concentric Right Angle Shaft/F3F>

Series	Power	Power Supply/ Certification Codes	Voltage (V)	Frequency (Hz)	Rated Current (A)	Startup Current (A)	Rated Speed (r/min)
MID	0.1kW	NN	200/200/220	50/60/60	0.61/0.54/0.54	2.39/2.27/2.52	1410/1690/1710
		WN	380/400/400/440	50/50/60/60	0.31/0.31/0.28/0.28	1.12/1.18/1.12/1.22	1400/1410/1690/1720
		KN	220/380	60/60	0.52/0.30	1.90/1.10	1680/1680
		CN	220/230/380	50/50/50	0.55/0.54/0.31	1.94/2.03/1.12	1400/1410/1400
		DN	220/220/380/380	50/60/50/60	0.55/0.52/0.31/0.30	1.94/1.90/1.12/1.10	1400/1680/1400/1680
		EN	415/440/480	50/50/60	0.30/0.29/0.26	1.06/1.12/1.17	1390/1420/1720
		AN	208/230/460/400	60/60/60/50	0.54/0.57/0.29/0.31	2.35/2.62/1.26/1.21	1690/1730/1730/1410
		MA	575	60	0.20	0.87	1700
	0.2 kW IE2	NN	200/200/220	50/60/60	1.1/1.0/1.0	4.70/4.35/4.85	1400/1680/1700
		WN	380/400/400/440	50/50/60/60	0.56/0.56/0.50/0.50	2.29/2.38/2.29/2.48	1390/1400/1680/1710
		KN	220/380	60/60	0.93/0.52	3.70/2.20	1680/1680
		CN	220/230/380	50/50/50	0.99/0.98/0.56	3.97/4.15/2.29	1400/1410/1390
		DN	220/220/380/380	50/60/50/60	0.99/0.93/0.56/0.52	3.97/3.70/2.29/2.20	1400/1680/1390/1680
		EN	415/440/480	50/50/60	0.50/0.50/0.45	1.75/1.86/2.00	1370/1400/1700
		AN	208/230/460/400	60/60/60/50	1.0/1.0/0.50/0.56	4.78/5.16/2.56/2.44	1680/1720/1720/1400
		MA	575	60	0.40	1.78	1710
	0.4 kW IE2	NN	200/200/220	50/60/60	2.1/1.8/1.8	9.50/8.60/9.60	1400/1680/1700
		WN	380/400/400/440	50/50/60/60	1.0/1.0/0.9/0.9	4.35/4.65/4.30/4.75	1390/1400/1680/1710
		KN	220/380	60/60	1.7/1.0	7.10/4.09	1670/1670
		CN	220/230/380	50/50/50	1.8/1.8/1.0	7.63/7.88/4.43	1390/1400/1390
		DN	220/220/380/380	50/60/50/60	1.8/1.7/1.0/1.0	7.63/7.10/4.43/4.09	1390/1670/1390/1670
		EN	415/440/480	50/50/60	0.96/0.95/0.82	3.96/4.20/4.20	1390/1410/1680
		AN	208/230/460/400	60/60/60/50	1.8/1.8/0.9/1.0	8.90/9.76/4.73/4.78	1680/1720/1720/1400
		MA	575	60	0.68	3.51	1700
	0.75 kW IE3	NN	200/200/220	50/60/60	3.5/3.2/3.1	21.8/19.0/21.1	1450/1740/1750
		WN	380/400/400/440	50/50/60/60	1.73/1.72/1.58/1.54	10.2/10.8/9.8/10.7	1440/1450/1740/1750
		KN	220/380	60/60	2.9/1.7	16.9/9.8	1740/1740
		CN	220/230/380	50/50/50	3.0/3.0/1.7	17.8/18.7/10.3	1450/1450/1440
		DN	220/220/380/380	50/60/50/60	3.1/2.9/1.8/1.7	19.3/16.9/11.2/9.8	1450/1740/1450/1740
		EN	415/440/480	50/50/60	1.54/1.52/1.36	8.6/9.3/9.0	1440/1450/1750
		UN	230/460/400	60/60/50	3.1/1.5/1.7	22.3/11.2/10.8	1760/1760/1450
		MA	575	60	1.16	7.2	1750
	1.5 kW IE3	NN	200/200/220	50/60/60	6.7/6.1/5.9	45.6/40.3/45.1	1450/1740/1760
		WN	380/400/400/440	50/50/60/60	3.4/3.4/3.1/3.0	21.9/23.2/20.4/22.8	1450/1450/1750/1760
		KN	220/380	60/60	5.9/3.4	45.1/25.8	1760/1760
		CN	220/230/380	50/50/50	5.9/5.9/3.4	38.5/40.4/22.1	1450/1450/1450
		EN	415/440/480	50/50/60	3.1/3.1/2.8	20.8/22.2/21.2	1450/1460/1760
		UN	230/460/400	60/60/50	5.9/2.9/3.3	44.9/22.6/23.2	1760/1760/1450
		MA	575	60	2.2	17.0	1760
	2.2 kW IE3	NN	200/200/220	50/60/60	9.3/8.6/8.2	70.3/56.9/63.7	1470/1760/1770
		WN	380/400/400/440	50/50/60/60	4.5/4.4/4.2/3.9	30.0/32.0/25.0/28.0	1440/1450/1740/1750
		KN	220/380	60/60	8.3/4.8	65.0/38.0	1770/1770
		CN	220/230/380	50/50/50	7.9/7.7/4.5	52.0/54.3/30.0	1460/1470/1440
		EN	415/440/480	50/50/60	4.3/4.3/3.8	33.1/35.5/29.8	1460/1470/1770
		UN	230/460/400	60/60/50	7.9/4.0/4.5	65.2/34.8/36.3	1770/1770/1470
		MA	575	60	3.3	24.4	1760

The rated current in the motor characteristics table is the current data for the motor operating without a gearbox.
With regard to gearmotors with a brake, it is necessary to consider the current value flowing through the brake as needed.
For more details, please contact your nearest Sales Office or the CS Center.

1-2. Performance Table

F2 Type Gearmotors/Gearmotors with Brake <Concentric Right Angle Hollow Bore/F2S>

[Notes]
- The values in parentheses ( ) in the drawings are the indications for gearmotors with brake.
- The output shaft speed is the value determined with the motor's synch-speed and the reduction ratio.
- Allowable output shaft O.H.L. is the value at 10 mm from the end of the output shaft.
- The "*" mark indicates a limited torque type. Please make sure to check the allowable output shaft torque in the performance table.
- The key for the output shaft is not included.
- In the performance table, the reduction ratio in ▭ indicates that when the connection is made as shown on page 546 (CW), the direction of rotation is clockwise in the case of a three-Phase motor or counterclockwise in the case of a single-Phase motor when viewed from the side indicated by arrow Ⓐ shown in the figure on the right. (Refer to the figure on the right)

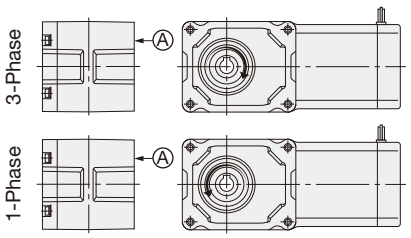

Series	Motor Power	Frame Size	Reduction Ratio	Actual Reduction Ratio	Output Shaft Speed r/min 50 Hz	Output Shaft Speed r/min 60 Hz	Allowable Output Shaft Torque N·m	Allowable Output Shaft O.H.L. N	Allowable Output Shaft Thrust Load N	Drawings
MINI	15 W	12	1/10	4/41	150	180	0.69	343	88	P.460
			1/15	8/123	100	120	0.98	441	108	
			1/20	2/41	75	90	1.27	539	137	
			1/25	8/205	60	72	1.67	588	147	
			1/30	4/123	50	60	1.96	686	177	
			1/40	1/41	37.5	45	2.65	784	196	
			1/50	4/205	30	36	3.33	882	226	
			1/60	20/1189	25	30	3.92	882	226	
			1/80	1/82	18.8	22.5	5.00	980	245	
			1/100	2/205	15	18	6.27	980	245	
			1/120	1/123	12.5	15	7.45	1080	275	
			1/160	1/164	9.4	11.2	9.80	1080	275	
			1/200	1/205	7.5	9	12.7	1080	275	
			1/240	5/1189	6.3	7.5	14.7	1080	275	
	25 W	12	1/10	4/41	150	180	1.08	343	88	P.460
			1/15	8/123	100	120	1.67	441	108	
			1/20	2/41	75	90	2.25	539	137	
			1/25	8/205	60	72	2.74	588	147	
			1/30	4/123	50	60	3.33	686	177	
			1/40	1/41	37.5	45	4.41	784	196	
			1/50	4/205	30	36	5.49	882	226	
			1/60	20/1189	25	30	6.66	882	226	
			1/80	1/82	18.8	22.5	8.43	980	245	
			1/100	2/205	15	18	10.8	980	245	
			1/120	1/123	12.5	15	12.7	1080	275	
			1/160	1/164	9.4	11.2	16.7	1080	275	
			1/200	1/205	7.5	9	20.6	1080	275	
			1/240	5/1189	6.3	7.5	25.5	1080	275	
	40 W	12	1/10	4/41	150	180	1.76	343	88	P.460
			1/15	8/123	100	120	2.65	441	108	
			1/20	2/41	75	90	3.53	539	137	
			1/25	8/205	60	72	4.41	588	147	
			1/30	4/123	50	60	5.29	686	177	
			1/40	1/41	37.5	45	7.06	784	196	
			1/50	4/205	30	36	8.82	882	226	
			1/60	20/1189	25	30	10.8	882	226	
			1/80	1/82	18.8	22.5	13.7	980	245	
			1/100	2/205	15	18	16.7	980	245	
			1/120	1/123	12.5	15	20.6	1080	275	
		15	1/160	1/164	9.4	11.2	26.5	1370	343	P.461
			1/200	1/205	7.5	9	33.3	1370	343	
			1/240	1/246	6.3	7.5	40.2	1370	343	

Series	Motor Power	Frame Size	Reduction Ratio	Actual Reduction Ratio	Output Shaft Speed r/min 50 Hz	Output Shaft Speed r/min 60 Hz	Allowable Output Shaft Torque N·m	Allowable Output Shaft O.H.L. N	Allowable Output Shaft Thrust Load N	Drawings
MINI	60 W	12 (Note 1)	1/10	4/41	150	180	2.74	343	88	P.460
			1/15	8/123	100	120	4.12	441	108	
			1/20	2/41	75	90	5.49	539	137	
			1/25	8/205	60	72	6.96	588	147	
			1/30	4/123	50	60	8.33	686	177	
			1/40	1/41	37.5	45	10.8	784	196	
			1/50	4/205	30	36	13.7	882	226	
			1/60	20/1189	25	30	16.7	882	226	
		15 (Note 1)	1/10	4/41	150	180	2.74	343	108	P.461
			1/15	8/123	100	120	4.12	441	147	
			1/20	2/41	75	90	5.49	539	186	
			1/25	8/205	60	72	6.96	588	226	
			1/30	4/123	50	60	8.33	686	245	
			1/40	1/41	37.5	45	10.8	784	275	
			1/50	4/205	30	36	13.7	882	294	
			1/60	2/123	25	30	16.7	882	294	
		15	1/80	1/82	18.8	22.5	20.6	1270	324	P.461
			1/100	2/205	15	18	26.5	1270	324	
			1/120	1/123	12.5	15	31.4	1370	343	
			1/160	1/164	9.4	11.2	42.1	1370	343	
			1/200	1/205	7.5	9	52.9	1370	343	
			* 1/240	1/246	6.3	7.5	53.9	1370	343	
	90 W	15	1/10	4/41	150	180	4.12	441	108	P.461
			1/15	8/123	100	120	6.17	588	147	
			1/20	2/41	75	90	8.33	735	186	
			1/25	8/205	60	72	10.8	882	226	
			1/30	4/123	50	60	12.7	980	245	
			1/40	1/41	37.5	45	16.7	1080	275	
			1/50	4/205	30	36	20.6	1180	294	
			1/60	2/123	25	30	24.5	1180	294	
			1/80	1/82	18.8	22.5	31.4	1270	324	
			1/100	2/205	15	18	39.2	1270	324	
			1/120	1/123	12.5	15	47.0	1370	343	
			* 1/160	1/164	9.4	11.2	53.9	1370	343	
			* 1/200	1/205	7.5	9	53.9	1370	343	
			* 1/240	1/246	6.3	7.5	53.9	1370	343	

• Please read the notes on page 449.

Note 1: Only Three-phase standard voltage (200 V Class) motors are available for 60 W motors with frame size 12. Please note that the frame size for Three-phase High Voltage (400 V class) and Single-phase motors is 15.

F3 Type Gearmotors/Gearmotors with Brake <Concentric Right Angle Hollow Bore/F3S>

[Notes]
- The values in parentheses ( ) in the drawings are the indications for gearmotors with brake.
- The output shaft speed is the value determined with the motor's synch-speed and the reduction ratio.
- The key for the output shaft is not included.
- In the performance table, ▭ indicates that the shaft rotates clockwise when viewed from the flange surface side on the right when the connection is made as shown on page 523 (CW). (Refer to the figure on the right)
- Allowable output shaft O.H.L. is the value at 20 mm from the end of the output shaft.
- The "*" mark indicates a limited torque type. Please make sure to check the allowable output shaft torque in the performance table.

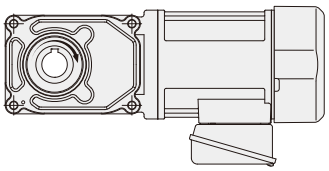

Series	Motor Power	Frame Size	Reduction Ratio	Actual Reduction Ratio	Output Shaft Speed r/min		Allowable Output Shaft Torque N·m		Allowable Output Shaft O.H.L.	Allowable Output Shaft Thrust Load	Drawings
					50 Hz	60 Hz	50 Hz	60 Hz	N	N	
MID	3-Phase 0.1 kW	20	1/5	1/5	300	360	2.5	2.2	980	244	P.464
			1/7.5	2/15	200	240	3.8	3.2	1080	270	
			1/10	1/10	150	180	5.2	4.3	1180	294	
			1/12.5	2/25	120	144	6.5	5.4	1270	316	
			1/15	1/15	100	120	7.7	6.5	1320	333	
			1/20	1/20	75	90	11	8.6	1470	373	
			1/25	1/25	60	72	13	11	1570	392	
			1/30	2/59	50	60	16	13	1670	422	
			1/40	1/40	37.5	45	21	18	1810	451	
			1/50	1/50	30	36	25	22	1860	471	
			1/60	1/59	25	30	31	25	1860	471	
		25	1/80	1/80	18.8	22.5	39	32	2550	637	P.466
			1/100	19/1880	15	18	49	41	2550	637	
			1/120	1/120	12.5	15	59	49	2550	637	
			1/160	1/160	9.4	11.3	78	66	2550	637	
			1/200	1/200	7.5	9	98	81	2550	637	
			* 1/240	1/240	6.3	7.5	101	98	2550	637	
	3-Phase 0.2 kW	20 (Small Frame Model)	1/5	1/5	300	360	5.5	4.6	980	244	P.464
			1/7.5	2/15	200	240	8.3	7	1080	270	
			1/10	1/10	150	180	11	9.2	1180	294	
			1/12.5	2/25	120	144	14	12	1270	316	
			1 /15	1/15	100	120	17	14	1320	333	
			1/20	1/20	75	90	23	19	1470	373	
			1/25	1/25	60	72	27	24	1570	392	
			1/30	2/59	50	60	33	27	1670	422	
		25	1/5	1/5	300	360	5.5	4.6	1230	307	P.466
			1/7.5	2/15	200	240	8.3	7	1370	342	
			1/10	1/10	150	180	11	9.2	1520	380	
			1/12.5	19/235	120	144	14	12	1620	405	
			1/15	1/15	100	120	17	14	1720	429	
			1/20	1/20	75	90	23	19	1860	466	
			1/25	1/25	60	72	27	24	2010	502	
			1/30	1/30	50	60	33	27	2110	527	
			1/40	1/40	37.5	45	44	37	2300	576	
			1/50	1/50	30	36	55	46	2450	613	
			1/60	1/60	25	30	67	55	2550	637	
		30	1/80	1/80	18.8	22.5	84	71	3090	775	P.470
			1/100	19/1880	15	18	105	87	3140	785	
			1/120	1/120	12.5	15	126	105	3140	785	
			1/160	1/160	9.4	11.3	169	140	3140	785	
			* 1/200	1/200	7.5	9	184	175	3140	785	
			* 1/240	1/240	6.3	7.5	184	184	3140	785	

Series	Motor Power	Frame Size	Reduction Ratio	Actual Reduction Ratio	Output Shaft Speed r/min		Allowable Output Shaft Torque N·m		Allowable Output Shaft O.H.L.	Allowable Output Shaft Thrust Load	Drawings
					50 Hz	60 Hz	50 Hz	60 Hz	N	N	
MID	3-Phase 0.4 kW	25 (Small Frame Model)	1/5	1/5	300	360	11	9.2	1230	307	P.466
			1/7.5	2/15	200	240	17	14	1370	342	
			1/10	1/10	150	180	23	19	1520	380	
			1/12.5	19/235	120	144	27	24	1620	405	
			1/15	1/15	100	120	33	27	1720	429	
			1/ 20	1/20	75	90	44	37	1860	466	
			1/25	1/25	60	72	55	46	2010	502	
			1/30	1/30	50	60	67	55	2110	527	
		30	1/5	1/5	300	360	11	9.2	1520	375	P.470
			1/7.5	2/15	200	240	17	14	1760	438	
			1/10	1/10	150	180	23	19	1910	475	
			1/12.5	19/235	120	144	27	24	2060	506	
			1/15	1/15	100	120	33	27	2160	539	
			1/20	1/20	75	90	44	37	2400	600	
			1/25	1/25	60	72	55	46	2550	637	
			1/30	1/30	50	60	67	55	2650	662	
			1/40	1/40	37.5	45	88	74	2840	711	
			1/50	1/50	30	36	111	92	2990	747	
			1/60	1/60	25	30	133	111	3090	767	
		35	1/80	1/80	18.8	22.5	169	140	3480	873	P.472
			1/100	19/1880	15	18	211	175	3530	883	
			1/120	1/120	12.5	15	253	211	3530	883	
			* 1/160	1/160	9.4	11.3	270	270	3630	912	
			* 1/200	1/200	7.5	9	270	270	3630	912	
			* 1/240	1/240	6.3	7.5	270	270	3630	912	
	3-Phase 0.75 kW	30 (Small Frame Model)	1/5	1/5	300	360	21	18	1520	375	P.470
			1/7.5	2/15	200	240	31	25	1760	438	
			1/10	1/10	150	180	41	34	1910	475	
			1/12.5	19/235	120	144	52	43	2060	506	
			1/15	1/15	100	120	63	52	2160	539	
			1/20	1/20	75	90	83	70	2400	600	
			1/25	1/25	60	72	104	86	2550	637	
			1/30	1/30	50	60	124	104	2650	662	
		35	1/5	1/5	300	360	21	18	1960	500	P.472
			1/7.5	2/15	200	240	31	25	2250	567	
			1/10	1/10	150	180	41	34	2450	613	
			1/12.5	19/235	120	144	52	43	2600	669	
			1/15	1/15	100	120	63	52	2740	686	
			1/20	1/20	75	90	83	70	2990	747	
			1/25	1/25	60	72	104	86	3190	796	
			1/30	1/30	50	60	124	104	3280	821	
			1/40	1/40	37.5	45	166	138	3480	870	
			1/50	1/50	30	36	208	173	3480	870	
			1/60	1/60	25	30	249	208	3480	870	
		45	1/80	1/80	18.8	22.5	316	263	4750	1177	P.474
			1/100	19/1880	15	18	395	328	4750	1177	
			1/120	1/120	12.5	15	473	395	4750	1177	
			* 1/160	1/160	9.4	11.3	554	526	5190	1275	
			* 1/200	1/200	7.5	9	554	554	5190	1275	
			* 1/240	1/240	6.3	7.5	554	554	5190	1275	

• Please read the notes on page 451.

Series	Motor Power	Frame Size	Reduction Ratio	Actual Reduction Ratio	Output Shaft Speed r/min		Allowable Output Shaft Torque N·m		Allowable Output Shaft O.H.L.	Allowable Output Shaft Thrust Load	Drawings
					50 Hz	60 Hz	50 Hz	60 Hz	N	N	
MID	3-Phase 1.5 kW	35 (Small Frame Model)	1/5	1/5	300	360	41	34	1960	500	P.472
			1/7.5	2/15	200	240	63	52	2250	567	
			1/10	1/10	150	180	83	70	2450	613	
			1/12.5	19/235	120	144	104	86	2600	669	
			1/15	1/15	100	120	124	104	2740	686	
			1/20	1/20	75	90	166	138	2990	747	
			1/25	1/25	60	72	208	173	3190	796	
			1/30	1/30	50	60	249	208	3280	821	
		45	1/5	1/5	300	360	41	34	2940	800	P.474
			1/7.5	2/15	200	240	63	52	3330	900	
			1/10	1/10	150	180	83	70	3630	967	
			1/12.5	19/235	120	144	104	86	3920	1040	
			1/15	1/15	100	120	124	104	4070	1067	
			1/20	1/20	75	90	166	138	4460	1067	
			1/25	1/25	60	72	208	173	4700	1067	
			1/30	1/30	50	60	249	208	4750	1067	
			1/40	1/40	37.5	45	332	276	4750	1067	
			1/50	1/50	30	36	416	345	4750	1067	
			1/60	1/60	25	30	498	416	4750	1067	
	3-Phase 2.2 kW	45	1/5	1/5	300	360	61	51	3140	800	P.474
			1/7.5	2/15	200	240	91	76	3530	900	
			1/10	1/10	150	180	122	102	3920	967	
			1/12.5	19/235	120	144	152	126	4120	1040	
			1/15	1/15	100	120	182	152	4410	1067	
			1/20	1/20	75	90	244	203	4750	1067	
			1/25	1/25	60	72	305	254	4750	1067	
			1/30	1/30	50	60	366	305	4750	1067	

• Please read the notes on page 451.

F3 Type Gearmotors/Gearmotors with Brake <Concentric Right Angle Hollow Bore/F3S>

[Notes]
- The values in parentheses ( ) in the drawings are the indications for gearmotors with brake.
- The output shaft speed is the value determined with the motor's synch-speed and the reduction ratio.
- The key for the output shaft is not included.
- In the performance table, ▭ indicates that the shaft rotates clockwise when viewed from the flange surface side on the right when the connection is made as shown on page 548 (CW).
- The startup torque of the single-Phase 0.1 kW motor is 60 to 80 % due to the unit being a capacitor run motor.
- Allowable output shaft O.H.L. is the value at 20 mm from the end of the output shaft.
- The "*" mark indicates a limited torque type. Please make sure to check the allowable output shaft torque in the performance table.

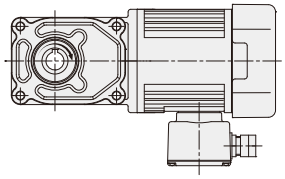

Series	Motor Power	Frame Size	Reduction Ratio	Actual Reduction Ratio	Output Shaft Speed r/min		Allowable Output Shaft Torque N·m		Allowable Output Shaft O.H.L.	Allowable Output Shaft Thrust Load	Drawings
					50 Hz	60 Hz	50 Hz	60 Hz	N	N	
MID	1-Phase 0.1 kW	20	1/5	1/5	300	360	2.5	2.2	980	244	P.465
			1/7.5	2/15	200	240	3.8	3.2	1080	270	
			1/10	1/10	150	180	5.2	4.3	1180	294	
			1/12.5	2/25	120	144	6.5	5.4	1270	316	
			1/15	1/15	100	120	7.7	6.5	1320	333	
			1/20	1/20	75	90	11	8.6	1470	373	
			1/25	1/25	60	72	13	11	1570	392	
			1/30	2/59	50	60	16	13	1670	422	
			1/40	1/40	37.5	45	21	18	1810	451	
			1/50	1/50	30	36	25	22	1860	471	
			1/60	1/59	25	30	31	25	1860	471	
		25	1/80	1/80	18.8	22.5	39	32	2550	637	P.468
			1/100	19/1880	15	18	49	41	2550	637	
			1/120	1/120	12.5	15	59	49	2550	637	
			1/160	1/160	9.4	11.3	78	66	2550	637	
			1/200	1/200	7.5	9	98	81	2550	637	
			* 1/240	1/240	6.3	7.5	101	98	2550	637	
	1-Phase 0.2 kW	25	1/5	1/5	300	360	5.5	4.6	1230	307	P.469
			1/7.5	2/15	200	240	8.3	7	1370	342	
			1/10	1/10	150	180	11	9.2	1520	380	
			1/12.5	19/235	120	144	14	12	1620	405	
			1/15	1/15	100	120	17	14	1720	429	
			1120	1/20	75	90	23	19	1860	466	
			1/25	1/25	60	72	27	24	2010	502	
			1/30	1/30	50	60	33	27	2110	527	
			1140	1/40	37.5	45	44	37	2300	576	
			1/50	1/50	30	36	55	46	2450	613	
			1/60	1/60	25	30	67	55	2550	637	
		30	1/80	1/80	18.8	22.5	84	71	3090	775	P.471
			1/100	19/1880	15	18	105	87	3140	785	
			1/120	1/120	12.5	15	126	105	3140	785	
			1/160	1/160	9.4	11.3	169	140	3140	785	
			* 1/200	1/200	7.5	9	184	175	3140	785	
			* 1/240	1/240	6.3	7.5	184	184	3140	785	
	1-Phase 0.4 kW	30	1/5	1/5	300	360	11	9.2	1520	375	P.471
			1/7.5	2/15	200	240	17	14	1760	438	
			1/10	1/10	150	180	23	19	1910	475	
			1/12.5	19/235	120	144	27	24	2060	506	
			1/15	1/15	100	120	33	27	2160	539	
			1/20	1/20	75	90	44	37	2400	600	
			1/25	1/25	60	72	55	46	2550	637	
			1/30	1/30	50	60	67	55	2650	662	
			1/40	1/40	37.5	45	88	74	2840	711	
			1/50	1/50	30	36	111	92	2990	747	
			1/60	1/60	25	30	133	111	3090	767	
		35	1/80	1/80	18.8	22.5	169	140	3480	873	P.473
			1/100	19/1880	15	18	211	175	3530	883	
			1/120	1/120	12.5	15	253	211	3530	883	
			* 1/160	1/160	9.4	11.3	270	270	3630	912	
			* 1/200	1/200	7.5	9	270	270	3630	912	
			* 1/240	1/240	6.3	7.5	270	270	3630	912	

F2 Type Gearmotors/Gearmotors with Brake <Concentric Right Angle Shaft/F2F>

[Notes]
- The values in parentheses ( ) in the drawings are the indications for gearmotors with brake.
- The output shaft speed is the value determined with the motor's synch-speed and the reduction ratio.
- Allowable output shaft O.H.L. is the value at the middle of the output shaft.
- Two shaft arrangements, L and T, are available for the F2F (concentric Right Angle Hollow Bore).
- The "*" mark indicates a limited torque type. Please make sure to check the allowable output shaft torque value in the performance table.
- In the performance table, the reduction ratio in ▭ indicates that when the connection is made as shown on page 546 (CW), the direction of rotation is clockwise in the case of a three-Phase motor or counterclockwise in the case of a single-Phase motor when viewed from the side indicated by arrow Ⓐ shown in the figure on the right. (Refer to the figure on the right)

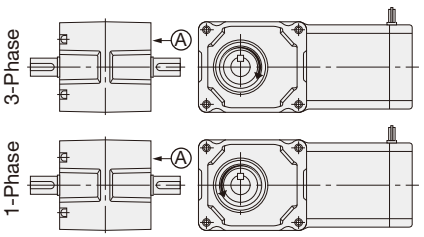

Series	Motor Power	Frame Size	Reduction Ratio	Actual Reduction Ratio	Output Shaft Speed r/min 50 Hz	Output Shaft Speed r/min 60 Hz	Allowable Output Shaft Torque N·m	Allowable Output Shaft O.H.L. N	Drawings
MINI	15 W	15	1/10	4/41	150	180	0.69	343	P.462
			1/15	8/123	100	120	0.98	441	
			1/20	2/41	75	90	1.27	539	
			1/25	8/205	60	72	1.67	588	
			1/30	4/123	50	60	1.96	686	
			1/40	1/41	37.5	45	2.65	784	
			1/50	4/205	30	36	3.33	882	
			1/60	20/1189	25	30	3.92	882	
			1/80	1/82	18.8	22.5	5.00	980	
			1/100	2/205	15	18	6.27	980	
			1/120	1/123	12.5	15	7.45	1080	
			1/160	1/164	9.4	11.2	9.80	1080	
			1/200	1/205	7.5	9	12.7	1080	
			1/240	5/1189	6.3	7.5	14.7	1080	
	25 W	15	1/10	4/41	150	180	1.08	343	P.462
			1/15	8/123	100	120	1.67	441	
			1/20	2/41	75	90	2.25	539	
			1/25	8/205	60	72	2.74	588	
			1/30	4/123	50	60	3.33	686	
			1/40	1/41	37.5	45	4.41	784	
			1/50	4/205	30	36	5.49	882	
			1/60	20/1189	25	30	6.66	882	
			1/80	1/82	18.8	22.5	8.43	980	
			1/100	2/205	15	18	10.8	980	
			1/120	1/123	12.5	15	12.7	1080	
			1/160	1/164	9.4	11.2	16.7	1080	
			1/200	1/205	7.5	9	20.6	1080	
			1/240	5/1189	6.3	7.5	25.5	1080	
	40 W	15	1/10	4/41	150	180	1.76	343	P.462
			1/15	8/123	100	120	2.65	441	
			1/20	2/41	75	90	3.53	539	
			1/25	8/205	60	72	4.41	588	
			1/30	4/123	50	60	5.29	686	
			1/40	1/41	37.5	45	7.06	784	
			1/50	4/205	30	36	8.82	882	
			1/60	20/1189	25	30	10.8	882	
			1/80	1/82	18.8	22.5	13.7	980	
			1/100	2/205	15	18	16.7	980	
			1/120	1/123	12.5	15	20.6	1080	
		18	1/160	1/164	9.4	11.2	26.5	1370	P.463
			1/200	1/205	7.5	9	33.3	1370	
			1/240	1/246	6.3	7.5	40.2	1370	

Series	Motor Power	Frame Size	Reduction Ratio	Actual Reduction Ratio	Output Shaft Speed r/min 50 Hz	Output Shaft Speed r/min 60 Hz	Allowable Output Shaft Torque N·m	Allowable Output Shaft O.H.L. N	Drawings
MINI	60 W	15 (Note 1)	1/10	4/41	150	180	2.74	343	P.462
			1/15	8/123	100	120	4.12	441	
			1/20	2/41	75	90	5.49	539	
			1/25	8/205	60	72	6.96	588	
			1/30	4/123	50	60	8.33	686	
			1/40	1/41	37.5	45	10.8	784	
			1/50	4/205	30	36	13.7	882	
			1/60	20/1189	25	30	16.7	882	
		18 (Note 1)	1/10	4/41	150	180	2.74	343	P.463
			1/15	8/123	100	120	4.12	441	
			1/20	2/41	75	90	5.49	539	
			1/25	8/205	60	72	6.96	588	
			1/30	4/123	50	60	8.33	686	
			1/40	1/41	37.5	45	10.8	784	
			1/50	4/205	30	36	13.7	882	
			1/60	2/123	25	30	16.7	882	
		18	1/80	1/82	18.8	22.5	20.6	1270	P.463
			1/100	2/205	15	18	26.5	1270	
			1/120	1/123	12.5	15	31.4	1370	
			1/160	1/164	9.4	11.2	42.1	1370	
			1/200	1/205	7.5	9	52.9	1370	
			* 1/240	1/246	6.3	7.5	53.9	1370	
	90 W	18	1/10	4/41	150	180	4.12	441	P.463
			1/15	8/123	100	120	6.17	588	
			1/20	2/41	75	90	8.33	735	
			1/25	8/205	60	72	10.8	882	
			1/30	4/123	50	60	12.7	980	
			1/40	1/41	37.5	45	16.7	1080	
			1/50	4/205	30	36	20.6	1180	
			1/60	2/123	25	30	24.5	1180	
			1/80	1/82	18.8	22.5	31.4	1270	
			1/100	2/205	15	18	39.2	1270	
			1/120	1/123	12.5	15	47.0	1370	
			* 1/160	1/164	9.4	11.2	53.9	1370	
			* 1/200	1/205	7.5	9	53.9	1370	
			* 1/240	1/246	6.3	7.5	53.9	1370	

Note 1: The frame size 15 for 60 W motors is only available for Three-phase standard voltage motors (200 V class). Please note that the frame size for Three-phase High Voltage (400 V class) and Single-phase motors will be 18.

F3 Type Gearmotors/Gearmotors with Brake <Concentric Right Angle Shaft/F3F>

[Notes]
- The values in parentheses ( ) in the drawings are the indications for gearmotors with brake.
- The output shaft speed is the value relative to the synchronous speed of the motor and the reduction ratio.
- In the performance table, ▭ indicates that the L shaft rotates clockwise and the R and T shafts rotate counterclockwise when viewed from the output shaft direction when the connection is made as shown on page 547 (CW). (Refer to the figure on the right)
- Allowable output shaft O.H.L. is the value at the middle of the output shaft.
- "*" mark indicates a limited torque type. Please make sure to check the allowable output shaft torque in the performance table.

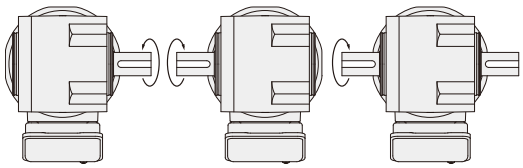

Series	Motor Power	Frame Size	Reduction Ratio	Actual Reduction Ratio	Output Shaft Speed r/min		Allowable Output Shaft Torque N·m		Allowable Output Shaft O.H.L.	Drawings
					50 Hz	60 Hz	50 Hz	60 Hz	N	
MID	3-Phase 0.1 kW	18	1/5	1/5	300	360	2.5	2.2	880	P.475
			1/7.5	2/15	200	240	3.8	3.2	980	
			1/10	1/10	150	180	5.2	4.3	1080	
			1/12.5	2/25	120	144	6.5	5.4	1180	
			1/15	1/15	100	120	7.7	6.5	1230	
			1/20	1/20	75	90	11	8.6	1370	
			1/25	1/25	60	72	13	11	1470	
			1/30	2/59	50	60	16	13	1570	
			1/40	1/40	37.5	45	21	18	1720	
			1/50	1/50	30	36	25	22	1860	
			1/60	1/59	25	30	31	25	1860	
		22	1/80	1/80	18.8	22.5	39	32	2550	P.476
			1/100	19/1880	15	18	49	41	2550	
			1/120	1/120	12.5	15	59	49	2550	
			1/160	1/160	9.4	11.3	78	66	2550	
			1/200	1/200	7.5	9	98	81	2550	
			* 1/240	1/240	6.3	7.5	101	98	2550	
	3-Phase 0.2 kW	18 (Small Frame Model)	1/5	1/5	300	360	5.5	4.6	880	P.475
			1/7.5	2/15	200	240	8.3	7	980	
			1/10	1/10	150	180	11	9.2	1080	
			1/12.5	2/25	120	144	14	12	1180	
			1/15	1/15	100	120	17	14	1230	
			1/20	1/20	75	90	23	19	1370	
			1/25	1/25	60	72	27	24	1470	
			1/30	2/59	50	60	33	27	1570	
		22	1/5	1/5	300	360	5.5	4.6	1270	P.476
			1/7.5	2/15	200	240	8.3	7.0	1420	
			1/10	1/10	150	180	11	9.2	1520	
			1/12.5	19/235	120	144	14	12	1620	
			1/15	1/15	100	120	17	14	1720	
			1/20	1/20	75	90	23	19	1910	
			1/25	1/25	60	72	27	24	2060	
			1/30	1/30	50	60	33	27	2160	
			1/40	1/40	37.5	45	44	37	2400	
			1/50	1/50	30	36	55	46	2550	
			1/60	1/60	25	30	67	55	2550	
		28	1/80	1/80	18.8	22.5	84	71	3090	P.477
			1/100	19/1880	15	18	105	87	3140	
			1/120	1/120	12.5	15	126	105	3140	
			1/160	1/160	9.4	11.3	169	140	3140	
			* 1/200	1/200	7.5	9	184	175	3140	
			* 1/240	1/240	6.3	7.5	184	184	3140	

Series	Motor Power	Frame Size	Reduction Ratio	Actual Reduction Ratio	Output Shaft Speed r/min		Allowable Output Shaft Torque N·m		Allowable Output Shaft O.H.L.	Drawings
					50 Hz	60 Hz	50 Hz	60 Hz	N	
MID	3-Phase 0.4 kW	22 (Small Frame Model)	1/5	1/5	300	360	11	9.2	1270	P.476
			1/7.5	2/15	200	240	17	14	1420	
			1/10	1/10	150	180	23	19	1520	
			1/12.5	19/235	120	144	27	24	1620	
			1/15	1/15	100	120	33	27	1720	
			1/20	1/20	75	90	44	37	1910	
			1/25	1/25	60	72	55	46	2060	
			1/30	1/30	50	60	67	55	2160	
		28	1/5	1/5	300	360	11	9.2	1470	P.477
			1/7.5	2/15	200	240	17	14	1670	
			1/10	1/10	150	180	23	19	1810	
			1/12.5	19/235	120	144	27	24	1960	
			1/15	1/15	100	120	33	27	2060	
			1/20	1/20	75	90	44	37	2300	
			1/25	1/25	60	72	55	46	2450	
			1/30	1/30	50	60	67	55	2600	
			1/40	1/40	37.5	45	88	74	2790	
			1/50	1/50	30	36	111	92	2990	
			1/60	1/60	25	30	133	111	3090	
		32	1/80	1/80	18.8	22.5	169	140	3330	P.478
			1/100	19/1880	15	18	211	175	3380	
			1/120	1/120	12.5	15	253	211	3380	
			* 1/160	1/160	9.4	11.3	270	270	3580	
			* 1/200	1/200	7.5	9	270	270	3630	
			* 1/240	1/240	6.3	7.5	270	270	3630	
	3-Phase 0.75 kW	28 (Small Frame Model)	1/5	1/5	300	360	21	18	1470	P.477
			1/7.5	2/15	200	240	31	25	1670	
			1/10	1/10	150	180	41	34	1810	
			1/12.5	19/235	120	144	52	43	1960	
			1/15	1/15	100	120	63	52	2060	
			1/20	1/20	75	90	83	70	2300	
			1/25	1/25	60	72	104	86	2450	
			1/30	1/30	50	60	124	104	2600	
		32	1/5	1/5	300	360	21	18	1760	P.478
			1/7.5	2/15	200	240	31	25	2010	
			1/10	1/10	150	180	41	34	2210	
			1/12.5	19/235	120	144	52	43	2350	
			1/15	1/15	100	120	63	52	2500	
			1/20	1/20	75	90	83	70	2700	
			1/25	1/25	60	72	104	86	2890	
			1/30	1/30	50	60	124	104	3040	
			1/40	1/40	37.5	45	166	138	3280	
			1/50	1/50	30	36	208	173	3330	
			1/60	1/60	25	30	249	208	3330	
		40	1/80	1/80	18.8	22.5	316	263	4460	P.479
			1/100	19/1880	15	18	395	328	4460	
			1/120	1/120	12.5	15	473	395	4460	
			* 1/160	1/160	9.4	11.3	554	526	4850	
			* 1/200	1/200	7.5	9	554	554	5190	
			* 1/240	1/240	6.3	7.5	554	554	5190	

• Please read the notes on page 457.

Series	Motor Power	Frame Size	Reduction Ratio	Actual Reduction Ratio	Output Shaft Speed r/min		Allowable Output Shaft Torque N·m		Allowable Output Shaft O.H.L.	Drawings
					50 Hz	60 Hz	50 Hz	60 Hz	N	
MID	3-Phase 1.5 kW	32 (Small Frame Model)	1/5	1/5	300	360	41	34	1760	P.478
			1/7.5	2/15	200	240	63	52	2010	
			1/10	1/10	150	180	83	70	2210	
			1/12.5	19/235	120	144	104	86	2350	
			1/15	1/15	100	120	124	104	2500	
			1/20	1/20	75	90	166	138	2700	
			1/25	1/25	60	72	208	173	2890	
			1/30	1/30	50	60	249	208	3040	
		40	1/5	1/5	300	360	41	34	2500	P.479
			1/7.5	2/15	200	240	63	52	2840	
			1/10	1/10	150	180	83	70	3140	
			1/12.5	19/235	120	144	104	86	3380	
			1/15	1/15	100	120	124	104	3530	
			1/20	1/20	75	90	166	138	3870	
			1/25	1/25	60	72	208	173	4170	
			1/30	1/30	50	60	249	208	4310	
			1/40	1/40	37.5	45	332	276	4460	
			1/50	1/50	30	36	416	346	4460	
			1/60	1/60	25	30	498	416	4460	
	3-Phase 2.2 kW	40	1/5	1/5	300	360	61	51	2940	P.479
			1/7.5	2/15	200	240	91	76	3230	
			1/10	1/10	150	180	122	102	3530	
			1/12.5	19/235	120	144	152	126	3820	
			1/15	1/15	100	120	182	152	4120	
			1/20	1/20	75	90	244	203	4410	
			1/25	1/25	60	72	305	254	4410	
			1/30	1/30	50	60	366	305	4410	

• Please read the notes on page 457.

1-3. Drawings

F2S Type Concentric Right Angle Hollow Bore | Shaft Diameter 12 | **Flange** Mounting

The values in parentheses ( ) are the indications for gearmotors with brake.

<Figure 1>

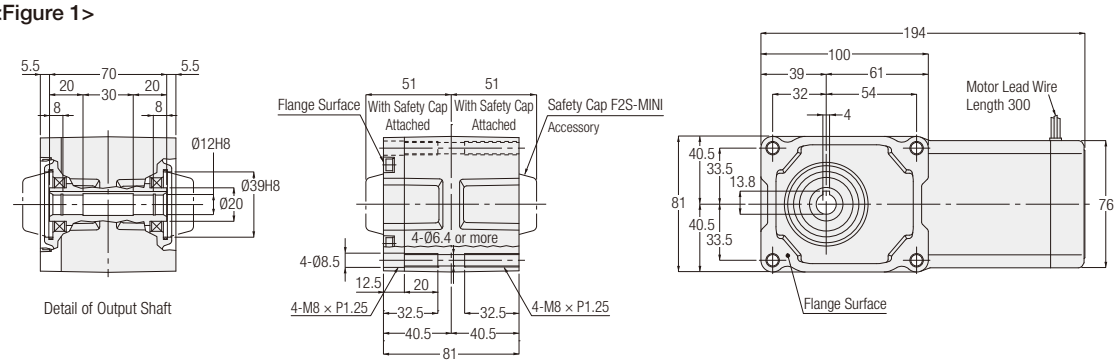

<Figure 2>

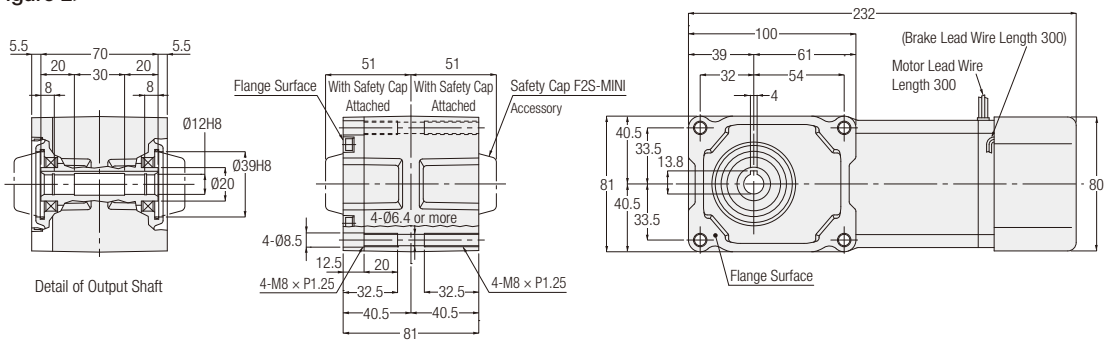

Number of Phases	Power	Part Number	Reduction Ratio	Figure Number	Brake	Approx. Weight (kg)
3-Phase	15 W	F2SM-12-***-T15	10, 15, 20, 25, 30, 40, 50, 60, 80, 100, 120, 160, 200, 240	1	No	3
		F2SM-12-***-T15W				
		F2SB-12-***-T15	10, 15, 20, 25, 30, 40, 50, 60, 80, 100, 120, 160, 200, 240	2	Yes	3.5
		F2SB-12-***-T15W				
	25 W	F2SM-12-***-T25	10, 15, 20, 25, 30, 40, 50, 60, 80, 100, 120, 160, 200, 240	1	No	3
		F2SM-12-***-T25W				
		F2SB-12-***-T25	10, 15, 20, 25, 30, 40, 50, 60, 80, 100, 120, 160, 200, 240	2	Yes	3.5
		F2SB-12-***-T25W				
	40 W	F2SM-12-***-T40	10, 15, 20, 25, 30, 40, 50, 60, 80, 100, 120	1	No	3
		F2SM-12-***-T40W		2	No	3.5
		F2SB-12-***-T40	10, 15, 20, 25, 30, 40, 50, 60, 80, 100, 120	2	Yes	3.5
		F2SB-12-***-T40W				
	60 W	F2SM-12-***-T60	10, 15, 20, 25, 30, 40, 50, 60	2	No	3.5
		F2SB-12-***-T60		2	Yes	
1-Phase	15 W	F2SM-12-***-S15	10, 15, 20, 25, 30, 40, 50, 60, 80, 100, 120, 160, 200, 240	1	No	3
		F2SM-12-***-S15W				
		F2SB-12-***-S15	10, 15, 20, 25, 30, 40, 50, 60, 80, 100, 120, 160, 200, 240	2	Yes	3.5
		F2SB-12-***-S15W				
	25 W	F2SM-12-***-S25	10, 15, 20, 25, 30, 40, 50, 60, 80, 100, 120, 160, 200, 240	1	No	3
		F2SM-12-***-S25W				
		F2SB-12-***-S25	10, 15, 20, 25, 30, 40, 50, 60, 80, 100, 120, 160, 200, 240	2	Yes	3.5
		F2SB-12-***-S25W				
	40 W	F2SM-12-***-S40	10, 15, 20, 25, 30, 40, 50, 60, 80, 100, 120	2	No	3.5
		F2SM-12-***-S40W				
		F2SB-12-***-S40	10, 15, 20, 25, 30, 40, 50, 60, 80, 100, 120	2	Yes	3.5
		F2SB-12-***-S40W				

Note: A reduction ratio will be indicated as *** in the nomenclature.
Note: Please refer to page 449 for the performance table.

F2S Type Concentric Right Angle Hollow Bore | Shaft Diameter **15** | **Flange** Mounting

The values in parentheses ( ) are the indications for gearmotors with brake.

<Figure 1>

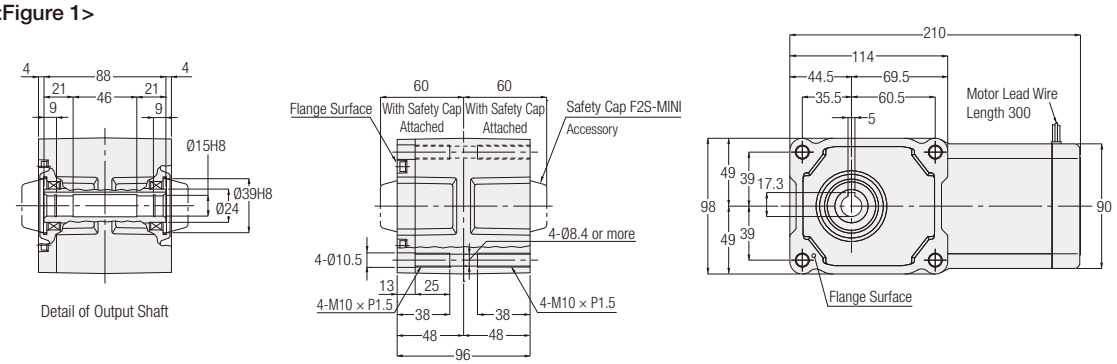

<Figure 2>

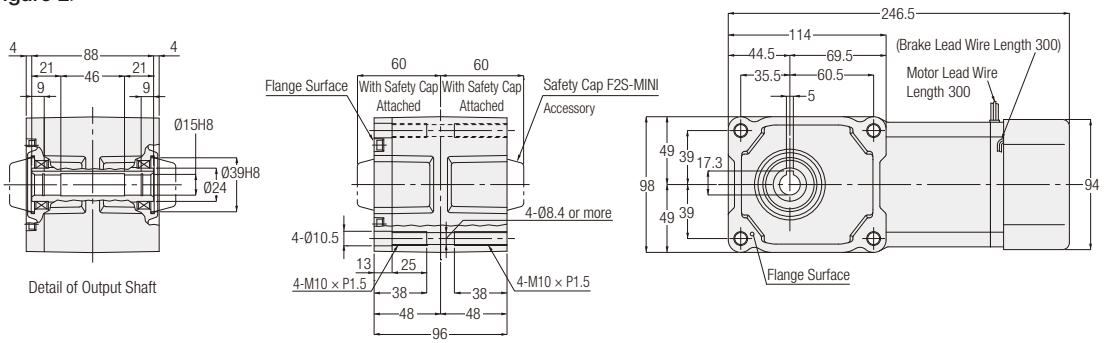

Number of Phases	Power	Part Number	Reduction Ratio	Figure Number	Brake	Approx. Weight (kg)
3-Phase	40 W	F2SM-15-✻✻✻-T40	160, 200, 240	1	No	4
		F2SM-15-✻✻✻-T40W				
		F2SB-15-✻✻✻-T40	160, 200, 240	2	Yes	4.5
		F2SB-15-✻✻✻-T40W				
	60 W	F2SM-15-✻✻✻-T60	80, 100, 120, 160, 200, 240	1	No	4
		F2SM-15-✻✻✻-T60W	10, 15, 20, 25, 30, 40, 50, 60, 80, 100, 120, 160, 200, 240	1		
		F2SB-15-✻✻✻-T60	80, 100, 120, 160, 200, 240	2	Yes	4.5
		F2SB-15-✻✻✻-T60W	10, 15, 20, 25, 30, 40, 50, 60, 80, 100, 120, 160, 200, 240	2		
	90 W	F2SM-15-✻✻✻-T90	10, 15, 20, 25, 30, 40, 50, 60, 80, 100, 120, 160, 200, 240	1	No	4
		F2SM-15-✻✻✻-T90W		2	No	4.5
		F2SB-15-✻✻✻-T90	10, 15, 20, 25, 30, 40, 50, 60, 80, 100, 120, 160, 200, 240	2	Yes	4.5
		F2SB-15-✻✻✻-T90W				
1-Phase	40 W	F2SM-15-✻✻✻-S40	160, 200, 240	1	No	4
		F2SM-15-✻✻✻-S40W				
		F2SB-15-✻✻✻-S40	160, 200, 240	2	Yes	4.5
		F2SB-15-✻✻✻-S40W				
	60 W	F2SM-15-✻✻✻-S60	10, 15, 20, 25, 30, 40, 50, 60, 80, 100, 120, 160, 200, 240	2	No	4
		F2SM-15-✻✻✻-S60W				
		F2SB-15-✻✻✻-S60	10, 15, 20, 25, 30, 40, 50, 60, 80, 100, 120, 160, 200, 240	2	Yes	4.5
		F2SB-15-✻✻✻-S60W				
	90 W	F2SM-15-✻✻✻-S90	10, 15, 20, 25, 30, 40, 50, 60, 80, 100, 120, 160, 200, 240	2	No	4.5
		F2SM-15-✻✻✻-S90W				
		F2SB-15-✻✻✻-S90	10, 15, 20, 25, 30, 40, 50, 60, 80, 100, 120, 160, 200, 240	2	Yes	4.5
		F2SB-15-✻✻✻-S90W				

Note: A reduction ratio will be indicated as ✻✻✻ in the nomenclature.
Note: Please refer to page 449 for the performance table.

F2F Type Concentric Right Angle Shaft | Shaft Diameter 15 | Flange Mounting

The values in parentheses ( ) are the indications for gearmotors with brake.

<Figure 1>

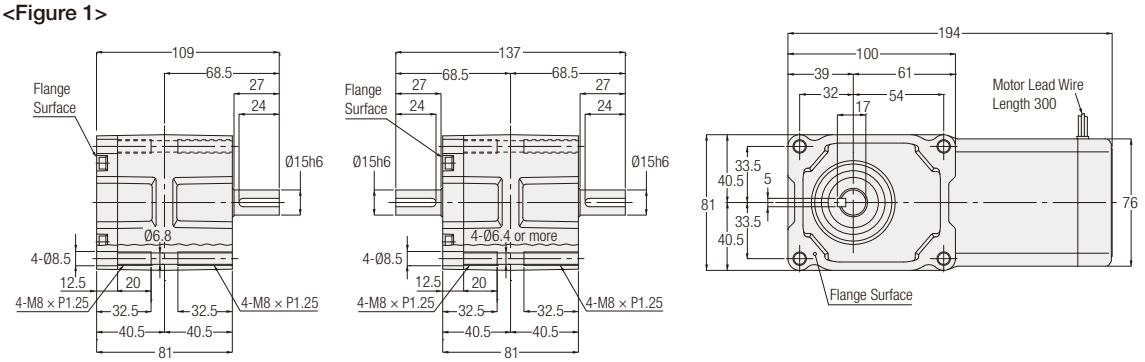

<Figure 2>

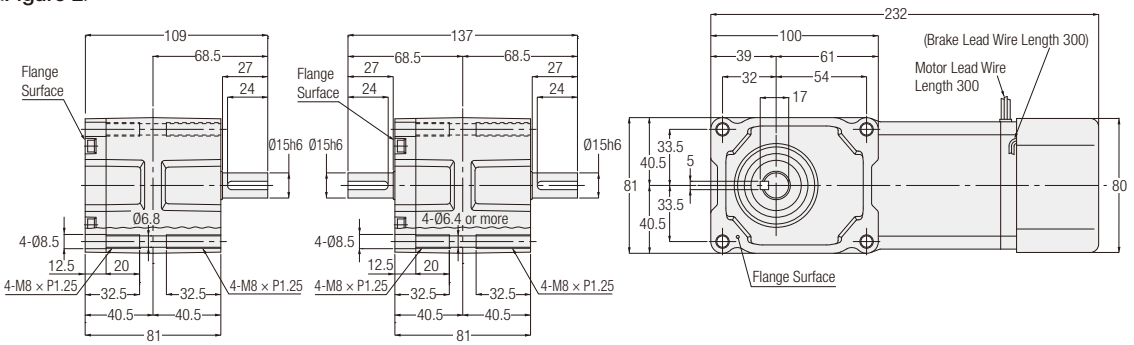

L Shaft T Shaft

Number of Phases	Power	Part Number	Reduction Ratio	Figure Number	Brake	Approx. Weight (kg)
3-Phase	15 W	F2FM-15#-***-T15	10, 15, 20, 25, 30, 40, 50, 60, 80, 100, 120, 160, 200, 240	1	No	3
		F2FM-15#-***-T15W				
		F2FB-15#-***-T15	10, 15, 20, 25, 30, 40, 50, 60, 80, 100, 120, 160, 200, 240	2	Yes	3.5
		F2FB-15#-***-T15W				
	25 W	F2FM-15#-***-T25	10, 15, 20, 25, 30, 40, 50, 60, 80, 100, 120, 160, 200, 240	1	No	3
		F2FM-15#-***-T25W				
		F2FB-15#-***-T25	10, 15, 20, 25, 30, 40, 50, 60, 80, 100, 120, 160, 200, 240	2	Yes	3.5
		F2FB-15#-***-T25W				
	40 W	F2FM-15#-***-T40	10, 15, 20, 25, 30, 40, 50, 60, 80, 100, 120	1	No	3
		F2FM-15#-***-T40W		2	No	3.5
		F2FB-15#-***-T40	10, 15, 20, 25, 30, 40, 50, 60, 80, 100, 120	2	Yes	3.5
		F2FB-15#-***-T40W				
	60 W	F2FM-15#-***-T60	10, 15, 20, 25, 30, 40, 50, 60	2	No	3.5
		F2FB-15#-***-T60		2	Yes	
1-Phase	15 W	F2FM-15#-***-S15	10, 15, 20, 25, 30, 40, 50, 60, 80, 100, 120, 160, 200, 240	1	No	3
		F2FM-15#-***-S15W				
		F2FB-15#-***-S15	10, 15, 20, 25, 30, 40, 50, 60, 80, 100, 120, 160, 200, 240	2	Yes	3.5
		F2FB-15#-***-S15W				
	25 W	F2FM-15#-***-S25	10, 15, 20, 25, 30, 40, 50, 60, 80, 100, 120, 160, 200, 240	1	No	3
		F2FM-15#-***-S25W				
		F2FB-15#-***-S25	10, 15, 20, 25, 30, 40, 50, 60, 80, 100, 120, 160, 200, 240	2	Yes	3.5
		F2FB-15#-***-S25W				
	40 W	F2FM-15#-***-S40	10, 15, 20, 25, 30, 40, 50, 60, 80, 100, 120	2	No	3.5
		F2FM-15#-***-S40W				
		F2FB-15#-***-S40	10, 15, 20, 25, 30, 40, 50, 60, 80, 100, 120	2	Yes	3.5
		F2FB-15#-***-S40W				

Note: A shaft arrangement (L, T) will be indicated as # in the nomenclature. In addition, a reduction ratio is indicated as ***.
Note: Please refer to page 455 for the performance table.

F2F Type Concentric Right Angle Shaft | Shaft Diameter **18** | **Flange** Mounting

The values in parentheses ( ) are the indications for gearmotors with brake.

<Figure 1>

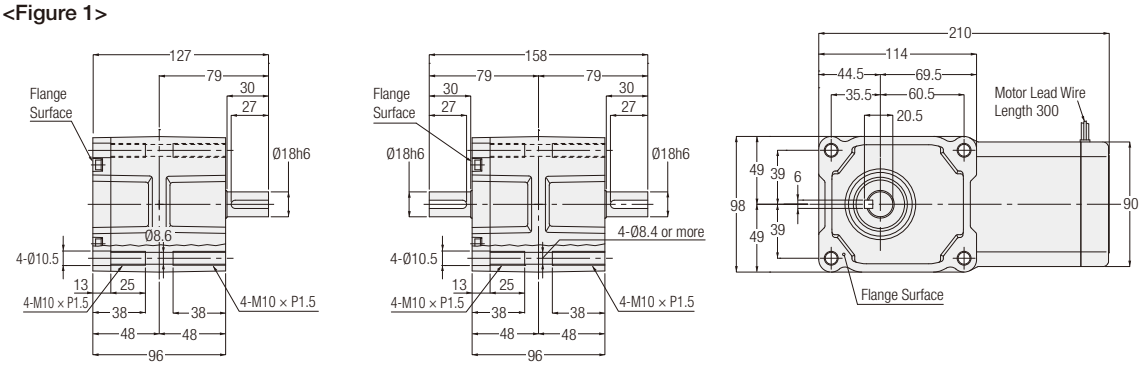

<Figure 2>

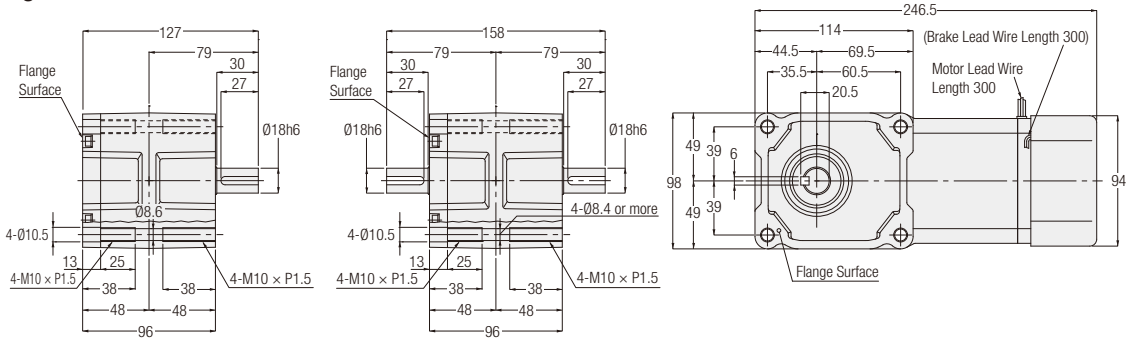

L Shaft **T Shaft**

Number of Phases	Power	Part Number	Reduction Ratio	Figure Number	Brake	Approx. Weight (kg)
3-Phase	40 W	F2FM-18#-***-T40	160, 200, 240	1	No	4
		F2FM-18#-***-T40W				
		F2FB-18#-***-T40	160, 200, 240	2	Yes	4.5
		F2FB-18#-***-T40W				
	60 W	F2FM-18#-***-T60	80, 100, 120, 160, 200, 240	1	No	4
		F2FM-18#-***-T60W	10, 15, 20, 25, 30, 40, 50, 60, 80, 100, 120, 160, 200, 240	1		
		F2FB-18#-***-T60	80, 100, 120, 160, 200, 240	2	Yes	4.5
		F2FB-18#-***-T60W	10, 15, 20, 25, 30, 40, 50, 60, 80, 100, 120, 160, 200, 240	2		
	90 W	F2FM-18#-***-T90	10, 15, 20, 25, 30, 40, 50, 60, 80, 100, 120, 160, 200, 240	1	No	4
		F2FM-18#-***-T90W		2	No	4.5
		F2FB-18#-***-T90	10, 15, 20, 25, 30, 40, 50, 60, 80, 100, 120, 160, 200, 240	2	Yes	4.5
		F2FB-18#-***-T90W				
1-Phase	40 W	F2FM-18#-***-S40	160, 200, 240	1	No	4
		F2FM-18#-***-S40W				
		F2FB-18#-***-S40	160, 200, 240	2	Yes	4.5
		F2FB-18#-***-S40W				
	60 W	F2FM-18#-***-S60	10, 15, 20, 25, 30, 40, 50, 60, 80, 100, 120, 160, 200, 240	1	No	4
		F2FM-18#-***-S60W				
		F2FB-18#-***-S60	10, 15, 20, 25, 30, 40, 50, 60, 80, 100, 120, 160, 200, 240	2	Yes	4.5
		F2FB-18#-***-S60W				
	90 W	F2FM-18#-***-S90	10, 15, 20, 25, 30, 40, 50, 60, 80, 100, 120, 160, 200, 240	2	No	4.5
		F2FM-18#-***-S90W				
		F2FB-18#-***-S90	10, 15, 20, 25, 30, 40, 50, 60, 80, 100, 120, 160, 200, 240	2	Yes	4.5
		F2FB-18#-***-S90W				

Note: A shaft arrangement (L, T) will be indicated as # in the nomenclature. In addition, a reduction ratio is indicated as ***.
Note: Please refer to page 455 for the performance table.

F3S Type Concentric Right Angle Hollow Bore — Shaft Diameter 20 — Flange Mounting

The values in parentheses ( ) are the indications for gearmotors with brake.

<Figure 1>

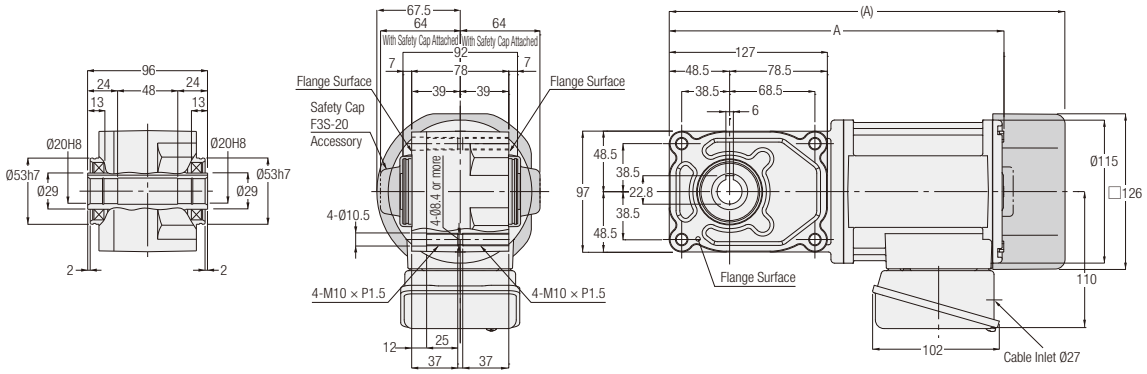

Number of Phases	Power	Part Number	Reduction Ratio	Figure Number	Brake	Approx. Weight (kg)	A
3-Phase	0.1 kW	F3S20N✱✱✱-MM01T◇◇TN	5, 7.5, 10, 12.5, 15, 20, 25, 30, 40, 50, 60	1	No	6.5	254
	0.1 kW	F3S20N✱✱✱-MM01T◇◇TB◆	5, 7.5, 10, 12.5, 15, 20, 25, 30, 40, 50, 60	1	Yes	8	294
	0.2 kW	F3S20N✱✱✱-MM02T◇◇TN	5, 7.5, 10, 12.5, 15, 20, 25, 30	1	No	7.5	269
	0.2 kW	F3S20N✱✱✱-MM02T◇◇TB◆	5, 7.5, 10, 12.5, 15, 20, 25, 30	1	Yes	9	319.5

Note: A reduction ratio will be indicated as ✱✱✱ in the nomenclature. In addition, a supply voltage/certification code will be indicated as ◇◇, and brake specification will be indicated as ◆.

Note: When the reduction ratio is 7.5, “7” will be indicated as ✱✱✱ in the nomenclature, and when the reduction ratio is 12.5, “12” will be indicated as ✱✱✱ in the nomenclature.

Note: Please refer to page 451 for the performance table.

F3S Type Concentric Right Angle Hollow Bore | Shaft Diameter **20** | **Flange** Mounting

The values in parentheses ( ) are the indications for gearmotors with brake.

<Figure 1>

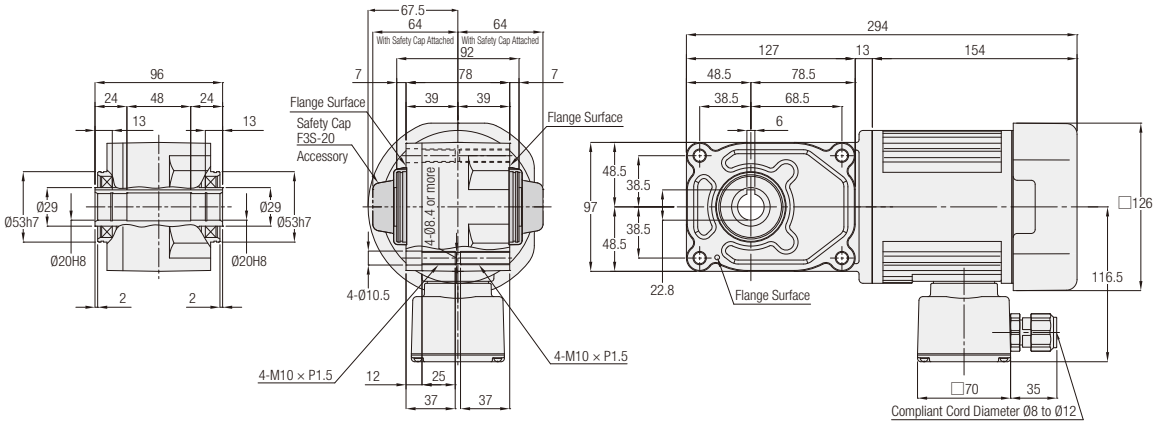

<Figure 2>

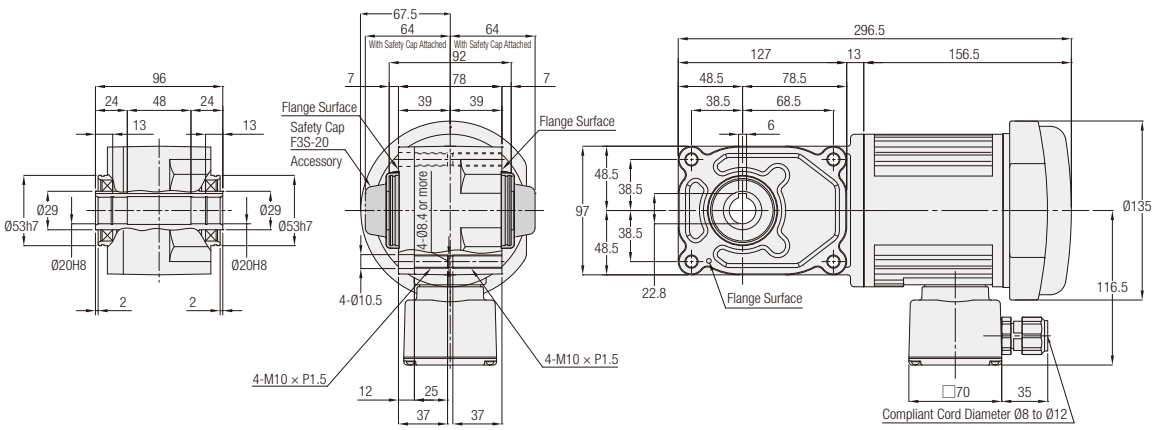

Number of Phases	Power	Part Number	Reduction Ratio	Figure Number	Brake	Approx. Weight (kg)
1-Phase	0.1 kW	F3S20N✱✱✱-MM01S◇JAN	5, 7.5, 10, 12.5, 15, 20, 25, 30, 40, 50, 60	1	No	7
		F3S20N✱✱✱-MM01S◇JAB2	5, 7.5, 10, 12.5, 15, 20, 25, 30, 40, 50, 60	2	Yes	8

Note: A reduction ratio will be indicated as ✱✱✱ in the nomenclature. In addition, a supply voltage code will be indicated as ◇.

Note: When the reduction ratio is 7.5, “7” will be indicated as ✱✱✱ in the nomenclature, and when the reduction ratio is 12.5, “12” will be indicated as ✱✱✱ in the nomenclature.

Note: Please refer to page 454 for the performance table.

F3S Type Concentric Right Angle Hollow Bore | Shaft Diameter **25** | **Flange** Mounting

The values in parentheses ( ) are the indications for gearmotors with brake.

<Figure 1>

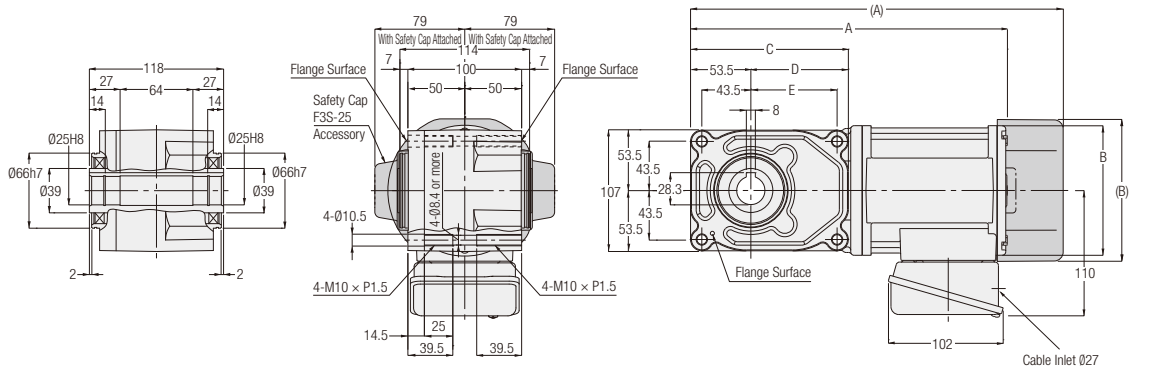

<Figure 2>

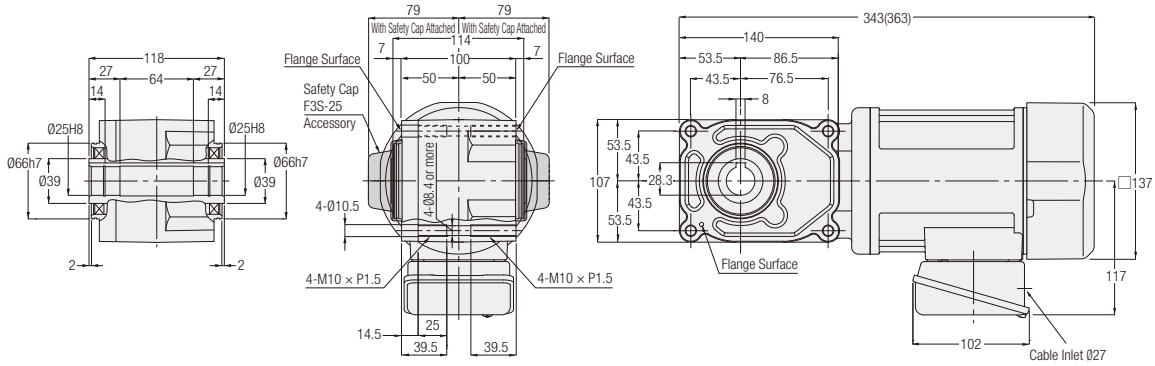

Number of Phases	Power	Part Number	Reduction Ratio	Figure Number	Brake	Approx. Weight (kg)	A	B	C	D	E
3-Phase	0.1 kW	F3S25N✱✱✱-MM01T◇◇TN	80, 100, 120, 160, 200, 240	1	No	8	285	Ø115	159	105.5	95.5
		F3S25N✱✱✱-MM01T◇◇TB◆			Yes	9.5	325	□126	159	105.5	95.5
	0.2 kW	F3S25N✱✱✱-MM02T◇◇TN	5, 7.5, 10, 12.5, 15, 20, 25, 30, 40, 50, 60	1	No	8.5	281.5	Ø115	140	86.5	76.5
		F3S25N✱✱✱-MM02T◇◇TB◆			Yes	10	332	□126	140	86.5	76.5
	0.4 kW	F3S25N✱✱✱-MM04T◇◇TN	5, 7.5, 10, 12.5, 15, 20, 25, 30	2	No	10.5	-	-	-	-	-
		F3S25N✱✱✱-MM04T◇◇TB◆			Yes	12	-	-	-	-	-

Note: A reduction ratio will be indicated as ✱✱✱ in the nomenclature. In addition, a supply voltage/certification code will be indicated as ◇◇, and brake specification will be indicated as ◆.

Note: When the reduction ratio is 7.5, "7" will be indicated as ✱✱✱ in the nomenclature, and when the reduction ratio is 12.5, "12" will be indicated as ✱✱✱ in the nomenclature.

Note: Please refer to page 451 for the performance table.

MEMO

F3S Type Concentric Right Angle Hollow Bore | Shaft Diameter 25 | **Flange** Mounting

The values in parentheses ( ) are the indications for gearmotors with brake.

<Figure 1>

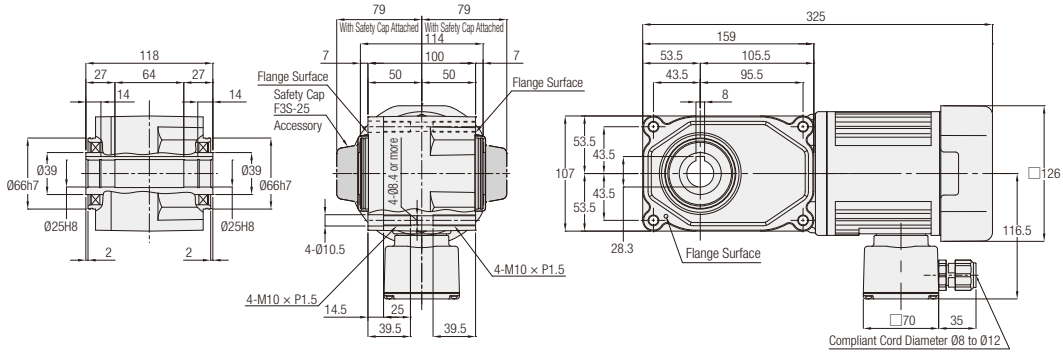

<Figure 2>

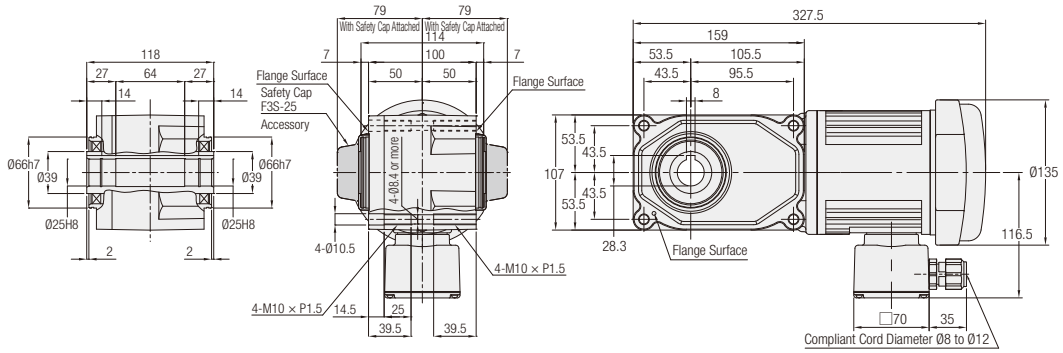

Number of Phases	Power	Part Number	Reduction Ratio	Figure Number	Brake	Approx. Weight (kg)
1-Phase	0.1 kW	F3S25N✱✱✱-MM01S◇JAN	80, 100, 120, 160, 200, 240	1	No	9
		F3S25N✱✱✱-MM01S◇JAB2	80, 100, 120, 160, 200, 240	2	Yes	10

Note: A reduction ratio will be indicated as ✱✱✱ in the nomenclature. In addition, a supply voltage code will be indicated as ◇.
Note: Please refer to page 454 for the performance table.

<Figure 3>

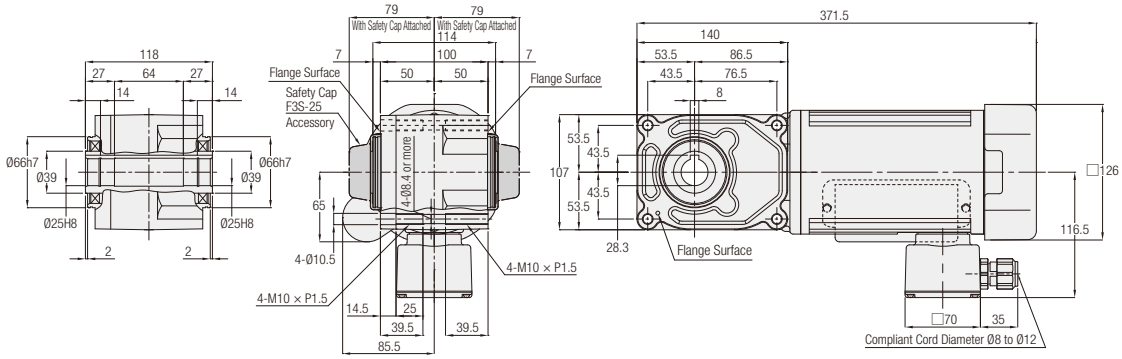

<Figure 4>

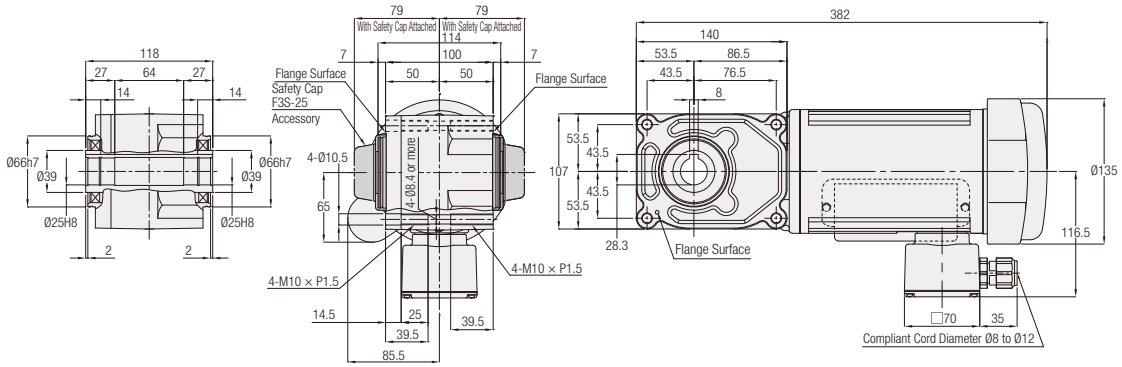

Number of Phases	Power	Part Number	Reduction Ratio	Figure Number	Brake	Approx. Weight (kg)
1-Phase	0.2 kW	F3S25N✱✱✱-MM02C◇JAN	5, 7.5, 10, 12.5, 15, 20, 25, 30, 40, 50, 60	3	No	11.5
		F3S25N✱✱✱-MM02C◇JAB2	5, 7.5, 10, 12.5, 15, 20, 25, 30, 40, 50, 60	4	Yes	13

Note: A reduction ratio will be indicated as ✱✱✱ in the nomenclature. In addition, a supply voltage code will be indicated as ◇.
Note: When the reduction ratio is 7.5, “7” will be indicated as ✱✱✱ in the nomenclature, and when the reduction ratio is 12.5, “12” will be indicated as ✱✱✱ in the nomenclature.
Note: Please refer to page 454 for the performance table.

F3S Type Concentric Right Angle Hollow Bore | Shaft Diameter 30 | Flange Mounting

The values in parentheses ( ) are the indications for gearmotors with brake.

<Figure 1>

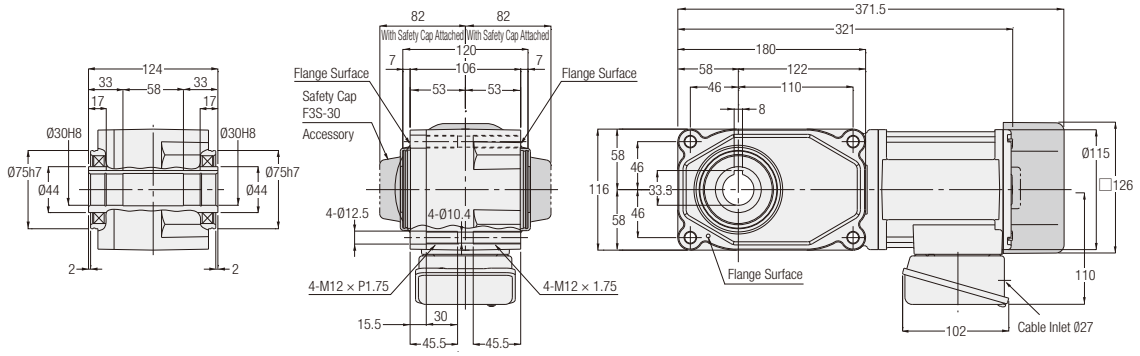

<Figure 2>

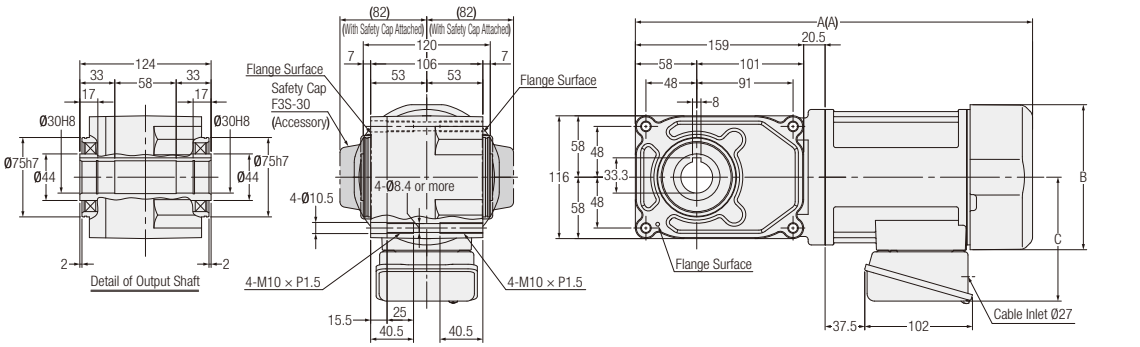

<Figure 3>

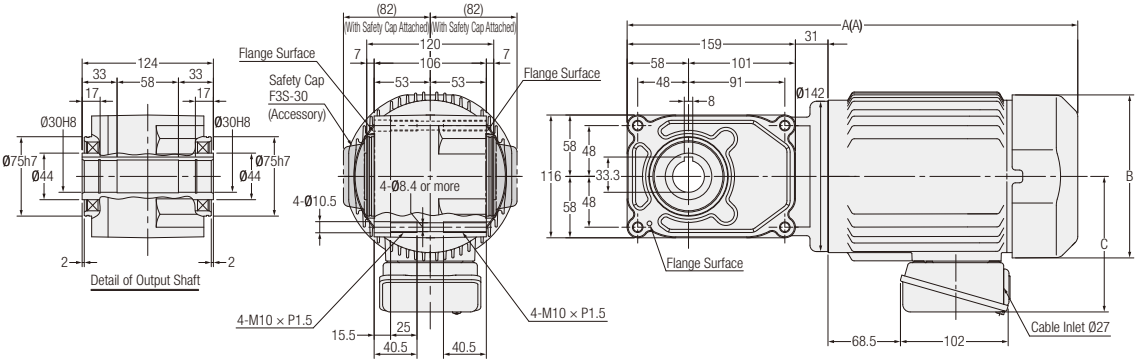

Number of Phases	Power	Part Number	Reduction Ratio	Figure Number	Brake	Approx. Weight (kg)	A	B	C
3-Phase	0.2 kW	F3S30N***-MM02T◇◇TN	80, 100, 120, 160, 200, 240	1	No	10	-	-	-
		F3S30N***-MM02T◇◇TB◆			Yes	11.5	-	-	-
	0.4 kW	F3S30N***-MM04T◇◇TN	5, 7.5, 10, 12.5, 15, 20, 25, 30, 40, 50, 60	2	No	11.5	355.5	□137	117
		F3S30N***-MM04T◇◇TB◆			Yes	13	375.5	□137	117
	0.75 kW	F3S30N***-MR08T◇◇TN	5, 7.5, 10, 12.5, 15, 20, 25, 30	3	No	18.5	407	□154	128
		F3S30N***-MR08T◇◇TB◆			Yes	20.5	426	□154	128

Note: A reduction ratio will be indicated as *** in the nomenclature. In addition, a supply voltage/certification code will be indicated as ◇◇, and brake specification will be indicated as ◆.

Note: When the reduction ratio is 7.5, "7" will be indicated as *** in the nomenclature, and when the reduction ratio is 12.5, "12" will be indicated as *** in the nomenclature.

Note: Please refer to page 451 for the performance table.

F3S Type Concentric Right Angle Hollow Bore | Shaft Diameter 30 | **Flange** Mounting

The values in parentheses ( ) are the indications for gearmotors with brake.

<Figure 1>

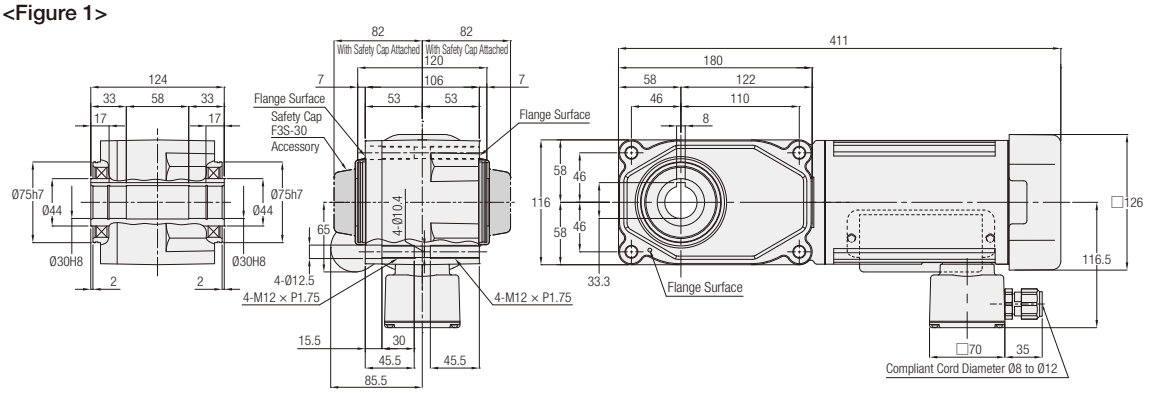

<Figure 2>

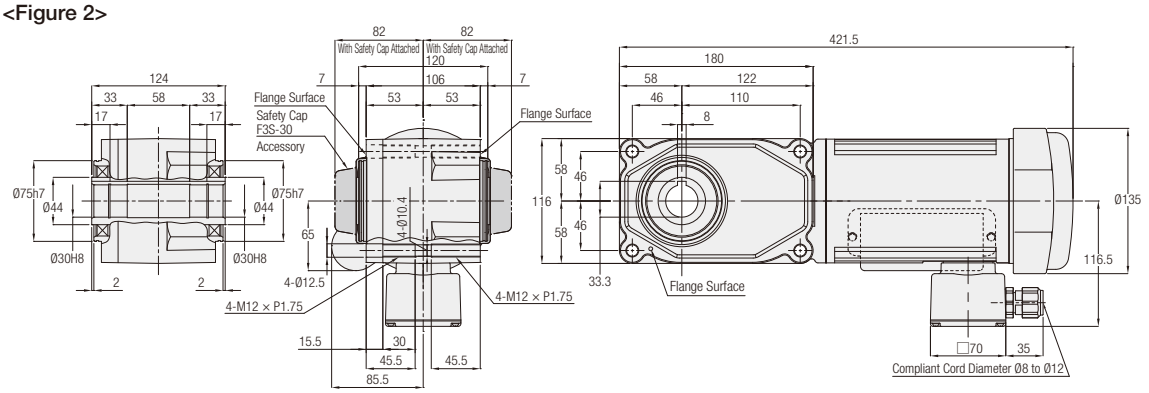

<Figure 3>

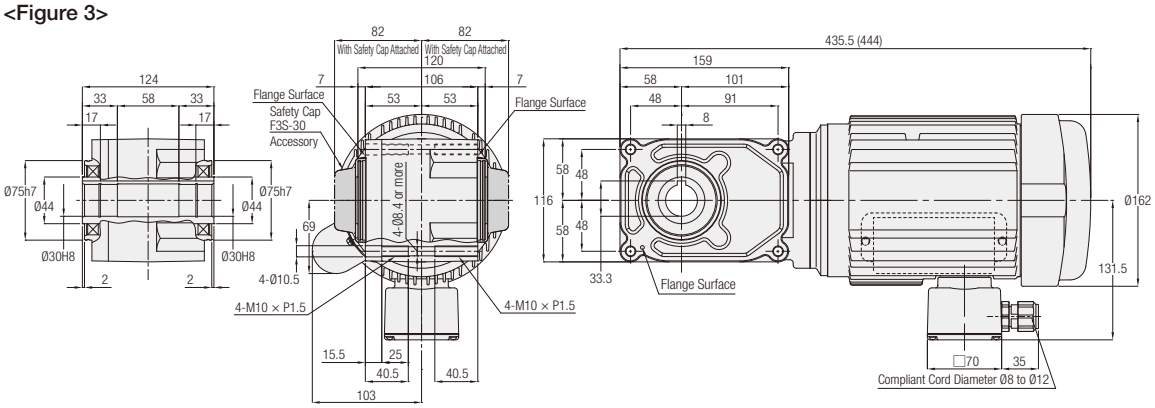

Number of Phases	Power	Part Number	Reduction Ratio	Figure Number	Brake	Approx. Weight (kg)
1-Phase	0.2 kW	F3S30N✻✻✻-MM02C◇JAN	80, 100, 120, 160, 200, 240	1	No	13
		F3S30N✻✻✻-MM02C◇JAB2	80, 100, 120, 160, 200, 240	2	Yes	14.5
	0.4 kW	F3S30N✻✻✻-MM04C◇JAN	5, 7.5, 10, 12.5, 15, 20, 25, 30, 40, 50, 60	3	No	17.5
		F3S30N✻✻✻-MM04C◇JAB2			Yes	20

Note: A reduction ratio will be indicated as ✻✻✻ in the nomenclature. In addition, a supply voltage code will be indicated as ◇.
Note: When the reduction ratio is 7.5, "7" will be indicated as ✻✻✻ in the nomenclature, and when the reduction ratio is 12.5, "12" will be indicated as ✻✻✻ in the nomenclature.
Note: Please refer to page 454 for the performance table.

F3S Type Concentric Right Angle Hollow Bore | Shaft Diameter 35 | Flange Mounting

The values in parentheses ( ) are the indications for gearmotors with brake.

<Figure 1>

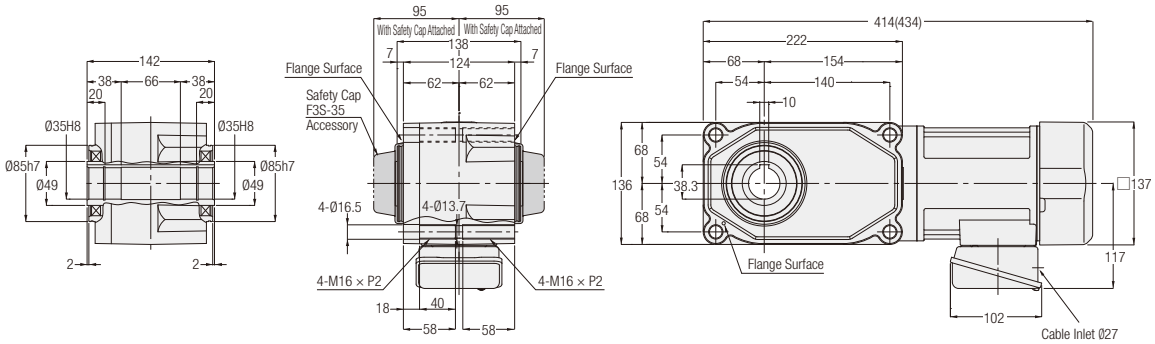

<Figure 2>

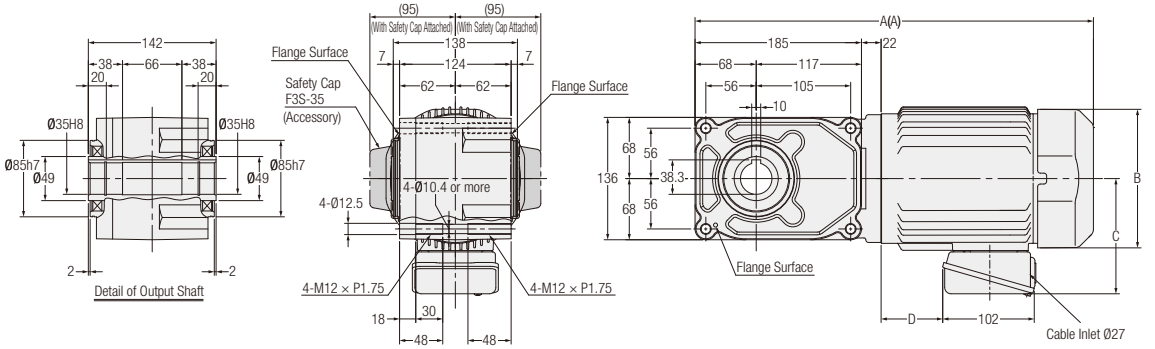

Number of Phases	Power	Part Number	Reduction Ratio	Figure Number	Brake	Approx. Weight (kg)	A	B	C	D
3-Phase	0.4 kW	F3S35N✱✱✱-MM04T◇◇TN	80, 100, 120, 160, 200, 240	1	No	15	-	-	-	-
		F3S35N✱✱✱-MM04T◇◇TB◆			Yes	17	-	-	-	-
	0.75 kW	F3S35N✱✱✱-MR08T◇◇TN	5, 7.5, 10, 12.5, 15, 20, 25, 30, 40, 50, 60	2	No	21	424	□154	128	68.5
		F3S35N✱✱✱-MR08T◇◇TB◆			Yes	23	443	□154	128	68.5
	1.5 kW	F3S35N✱✱✱-MR15T◇◇TN	5, 7.5, 10, 12.5, 15, 20, 25, 30	2	No	28	475	□178	139	91
		F3S35N✱✱✱-MR15T◇◇TB◆			Yes	31	504	□178	139	91

Note: A reduction ratio will be indicated as ✱✱✱ in the nomenclature. In addition, a supply voltage/certification code will be indicated as ◇◇, and brake specification will be indicated as ◆.

Note: When the reduction ratio is 7.5, “7” will be indicated as ✱✱✱ in the nomenclature, and when the reduction ratio is 12.5, “12” will be indicated as ✱✱✱ in the nomenclature.

Note: Please refer to page 452 for the performance table.

F3S Type Concentric Right Angle Hollow Bore | Shaft Diameter 35 | **Flange** Mounting

The values in parentheses ( ) are the indications for gearmotors with brake.

<Figure 1>

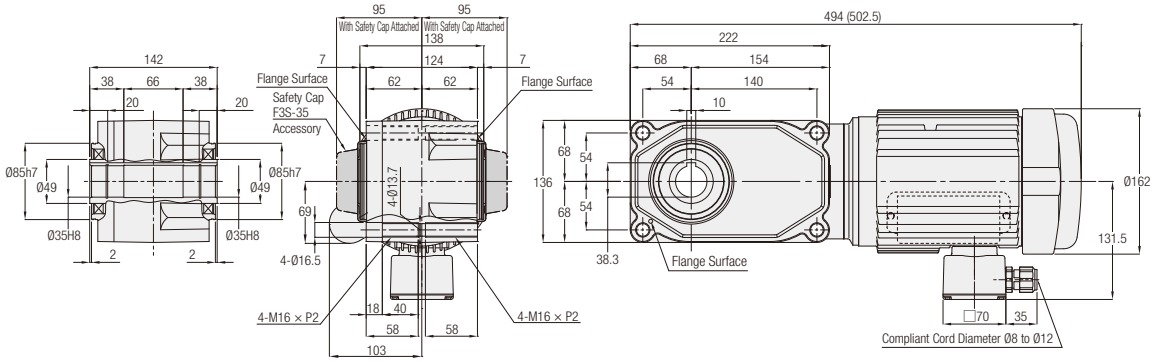

Number of Phases	Power	Part Number	Reduction Ratio	Figure Number	Brake	Approx. Weight (kg)
1-Phase	0.4 kW	F3S35N✻✻✻-MM04C◇JAN	80, 100, 120, 160, 200, 240	1	No	21
		F3S35N✻✻✻-MM04C◇JAB2			Yes	23.5

Note: A reduction ratio will be indicated as ✻✻✻ in the nomenclature. In addition, a supply voltage code will be indicated as ◇.
Note: Please refer to page 454 for the performance table.

F3S Type Concentric Right Angle Hollow Bore — Shaft Diameter 45 — Flange Mounting

The values in parentheses ( ) are the indications for gearmotors with brake.

<Figure 1>

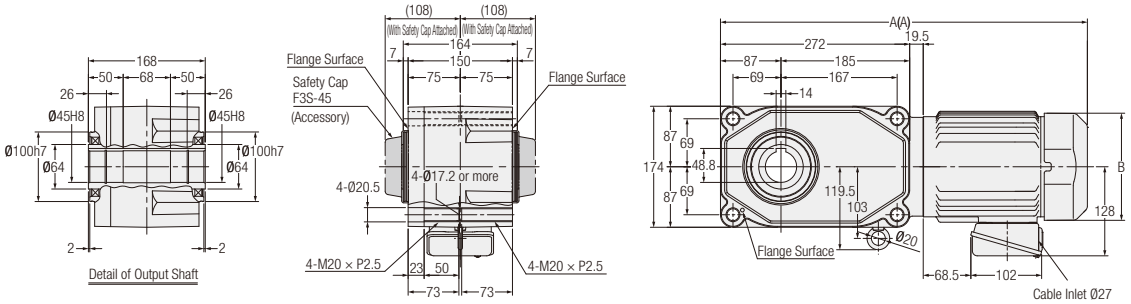

<Figure 2>

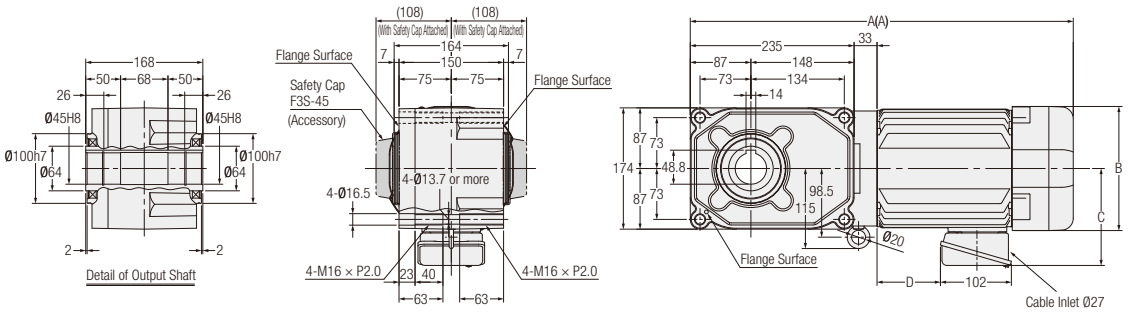

Number of Phases	Power	Part Number	Reduction Ratio	Figure Number	Brake	Approx. Weight (kg)	A	B	C	D
3-Phase	0.75 kW	F3S45N✱✱✱-MR08T◇◇TN	80, 100, 120, 160, 200, 240	1	No	28.5	508.5	□154	-	-
		F3S45N✱✱✱-MR08T◇◇TB◆			Yes	30.5	527.5	□154	-	-
	1.5 kW	F3S45N✱✱✱-MR15T◇◇TN	5, 7.5, 10, 12.5, 15, 20, 25, 30, 40, 50, 60	2	No	35.5	520.5	□178	139	91
		F3S45N✱✱✱-MR15T◇◇TB◆			Yes	38.5	549.5	□178	139	91
	2.2 kW	F3S45N✱✱✱-MR22T◇◇TN	5, 7.5, 10, 12.5, 15, 20, 25, 30	2	No	42	570	□192	149	140
		F3S45N✱✱✱-MR22T◇◇TB◆			Yes	45	599	□192	149	140

Note: A reduction ratio will be indicated as ✱✱✱ in the nomenclature. In addition, a supply voltage/certification code will be indicated as ◇◇, and brake specification will be indicated as ◆.

Note: When the reduction ratio is 7.5, “7” will be indicated as ✱✱✱ in the nomenclature, and when the reduction ratio is 12.5, “12” will be indicated as ✱✱✱ in the nomenclature.

Note: Please refer to page 452 for the performance table.

F3F Type Concentric Right Angle Shaft | Shaft Diameter **18** | **Flange** Mounting

The values in parentheses ( ) are the indications for gearmotors with brake.

<Figure 1>

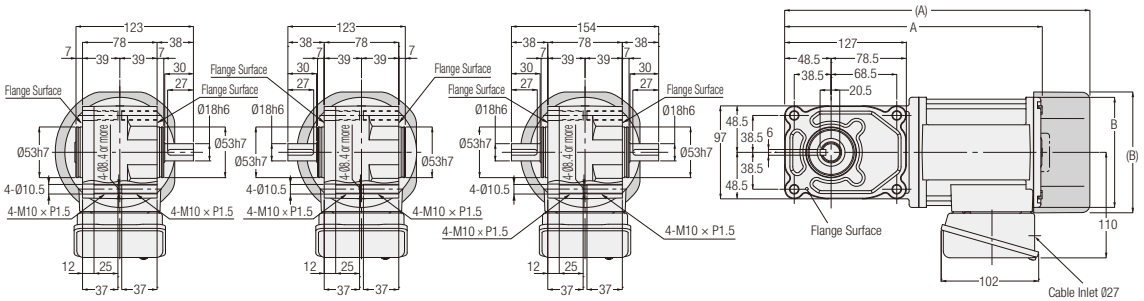

L Shaft R Shaft T Shaft

Number of Phases	Power	Part Number	Reduction Ratio	Figure Number	Brake	Approx. Weight (kg)	A	B
3-Phase	0.1 kW	F3F18#***-MM01T◇◇TN	5, 7.5, 10, 12.5, 15, 20, 25, 30, 40, 50, 60	1	No	6.5	254	Ø115
	0.1 kW	F3F18#***-MM01T◇◇TB◆	5, 7.5, 10, 12.5, 15, 20, 25, 30, 40, 50, 60	1	Yes	8	293.9	□126
	0.2 kW	F3F18#***-MM02T◇◇TN	5, 7.5, 10, 12.5, 15, 20, 25, 30	1	No	7.5	269	Ø115
	0.2 kW	F3F18#***-MM02T◇◇TB◆	5, 7.5, 10, 12.5, 15, 20, 25, 30	1	Yes	9	319.5	□126

Note: A shaft arrangement (L, R, T) will be indicated as # in the nomenclature. In addition, a reduction ratio will be indicated as ***, a supply voltage/certification code will be indicated as ◇◇, and a brake specification will be indicated as ◆.

Note: When the reduction ratio is 7.5, “7” will be indicated as *** in the nomenclature, and when the reduction ratio is 12.5, “12” will be indicated as *** in the nomenclature.

Note: Please refer to page 457 for the performance table.

F3F Type Concentric Right Angle Shaft | Shaft Diameter 22 | **Flange** Mounting

The values in parentheses ( ) are the indications for gearmotors with brake.

<Figure 1>

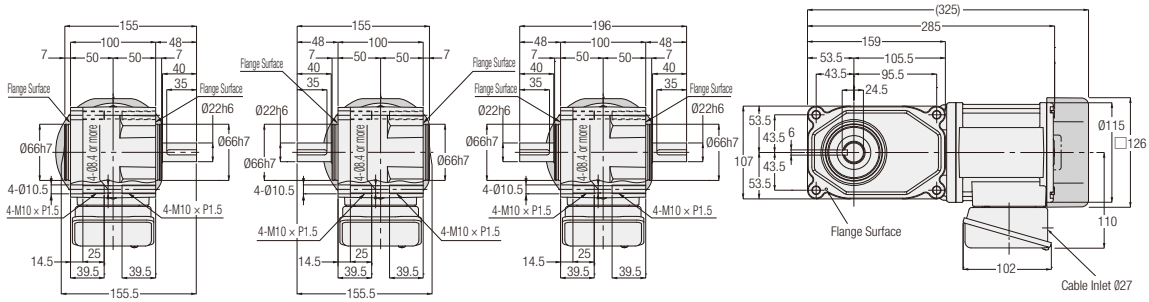

<Figure 2>

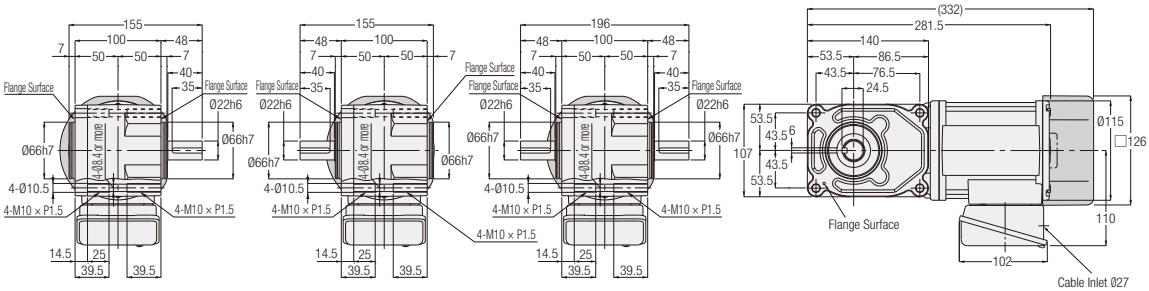

<Figure 3>

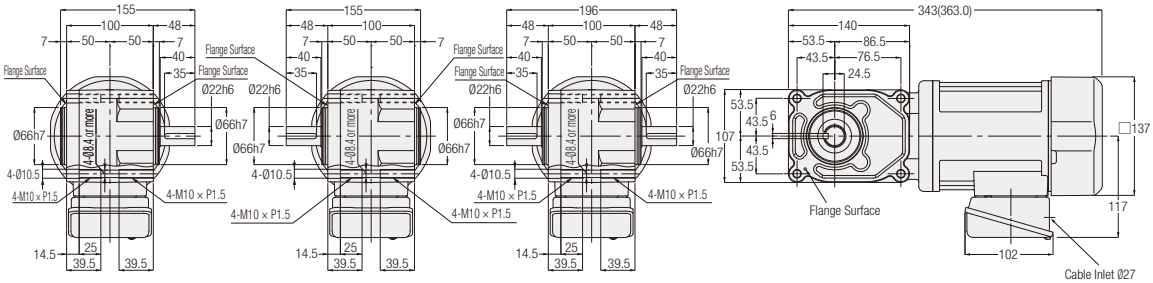

L Shaft **R Shaft** **T Shaft**

Number of Phases	Power	Part Number	Reduction Ratio	Figure Number	Brake	Approx. Weight (kg)
3-Phase	0.1 kW	F3F22####-MM01T◇◇TN	80, 100, 120, 160, 200, 240	1	No	8.5
		F3F22####-MM01T◇◇TB◆			Yes	10
	0.2 kW	F3F22####-MM02T◇◇TN	5, 7.5, 10, 12.5, 15, 20, 25, 30, 40, 50, 60	2	No	9.5
		F3F22####-MM02T◇◇TB◆			Yes	11
	0.4 kW	F3F22####-MM04T◇◇TN	5, 7.5, 10, 12.5, 15, 20, 25, 30	3	No	11.5
		F3F22####-MM04T◇◇TB◆			Yes	13

Note: A shaft arrangement (L, R, T) will be indicated as # in the nomenclature. In addition, a reduction ratio will be indicated as ✱✱✱, a supply voltage/certification code will be indicated as ◇◇, and a brake specification will be indicated as ◆.

Note: When the reduction ratio is 7.5, "7" will be indicated as ✱✱✱ in the nomenclature, and when the reduction ratio is 12.5, "12" will be indicated as ✱✱✱ in the nomenclature.

Note: Please refer to page 457 for the performance table.

F3F Type Concentric Right Angle Shaft | Shaft Diameter **28** | **Flange** Mounting

The values in parentheses ( ) are the indications for gearmotors with brake.

<Figure 1>

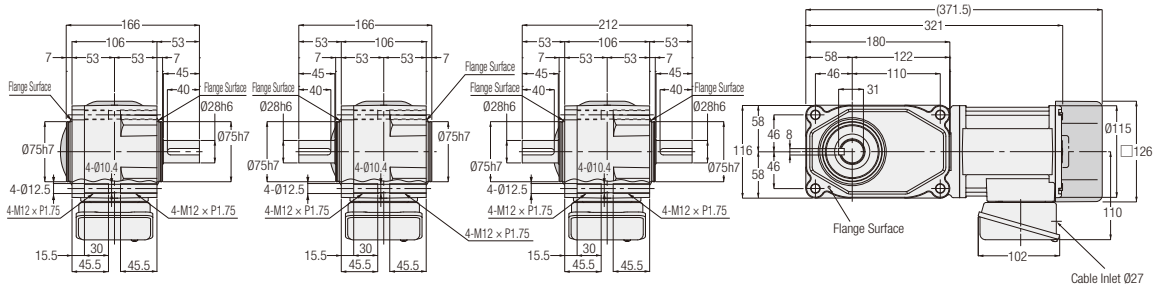

<Figure 2>

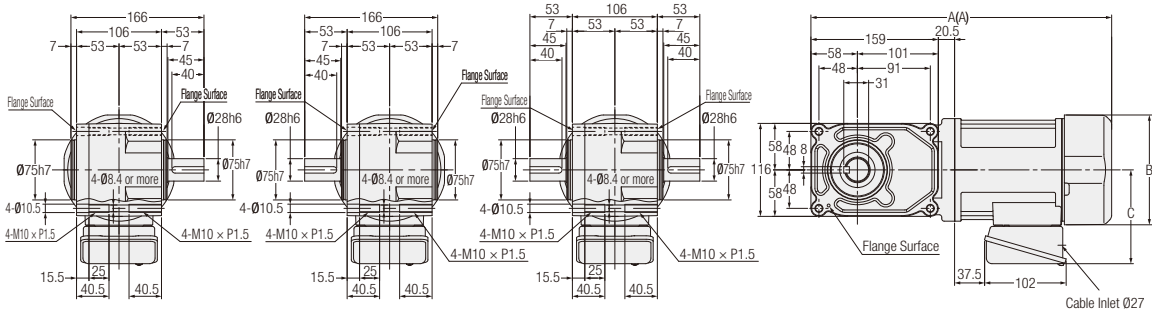

<Figure 3>

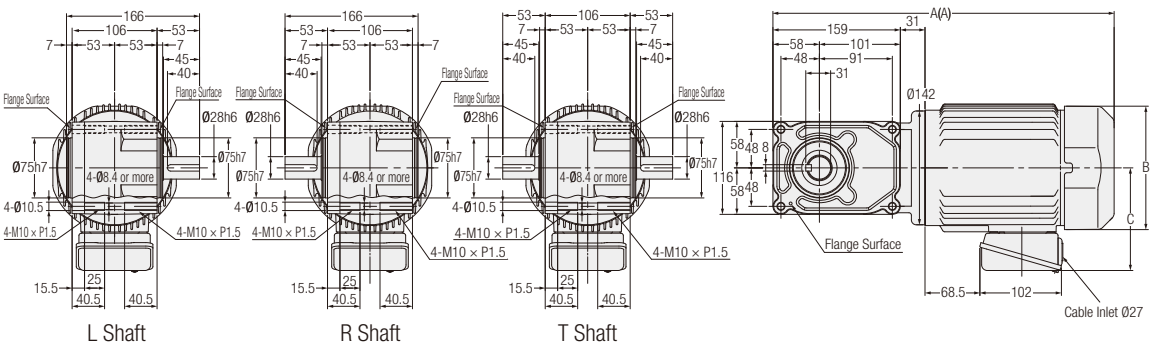

L Shaft R Shaft T Shaft

Number of Phases	Power	Part Number	Reduction Ratio	Figure Number	Brake	Approx. Weight (kg)	A	B	C
3-Phase	0.2 kW	F3F28####-MM02T◇◇TN	80, 100, 120, 160, 200, 240	1	No	11	-	-	-
		F3F28####-MM02T◇◇TB◆			Yes	12.5	-	-	-
	0.4 kW	F3F28####-MM04T◇◇TN	5, 7.5, 10, 12.5, 15, 20, 25, 30, 40, 50, 60	2	No	13	355.5	□137	117
		F3F28####-MM04T◇◇TB◆			Yes	14.5	375.5	□137	117
	0.75 kW	F3F28####-MR08T◇◇TN	5, 7.5, 10, 12.5, 15, 20, 25, 30	3	No	20	407	□154	128
		F3F28####-MR08T◇◇TB◆			Yes	22	426	□154	128

Note: A shaft arrangement (L, R, T) will be indicated as # in the nomenclature. In addition, a reduction ratio will be indicated as ✱✱✱, a supply voltage/certification code will be indicated as ◇◇, and a brake specification will be indicated as ◆.

Note: When the reduction ratio is 7.5, "7" will be indicated as ✱✱✱ in the nomenclature, and when the reduction ratio is 12.5, "12" will be indicated as ✱✱✱ in the nomenclature.

Note: Please refer to page 457 for the performance table.

F3F Type Concentric Right Angle Shaft | Shaft Diameter 32 | Flange Mounting

The values in parentheses ( ) are the indications for gearmotors with brake.

<Figure 1>

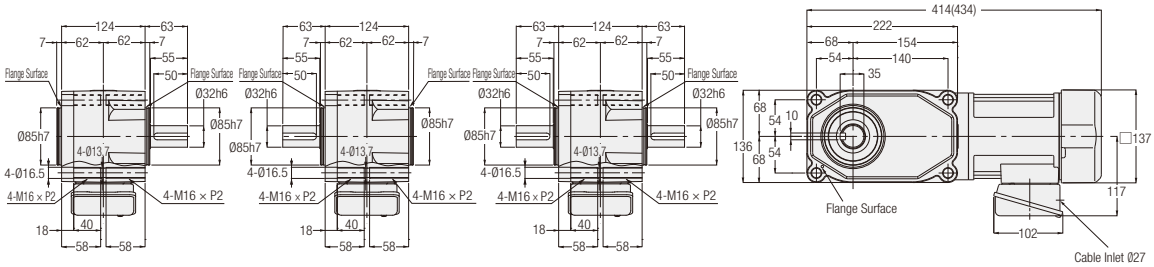

<Figure 2>

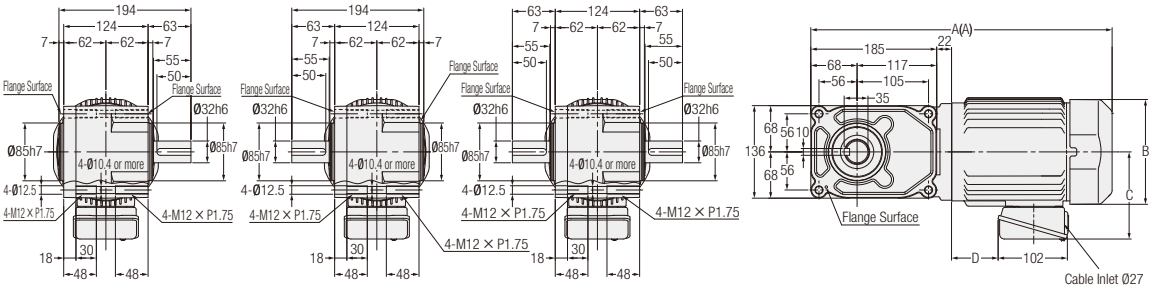

L Shaft R Shaft T Shaft

Note: Gearmotors with a motor power of 0.75kW does not include the hanging plate.

Number of Phases	Power	Part Number	Reduction Ratio	Figure Number	Brake	Approx. Weight (kg)	A	B	C	D
3-Phase	0.4 kW	F3F32#✱✱✱-MM04T◇◇TN	80, 100, 120, 160, 200, 240	1	No	17	-	-	-	-
		F3F32#✱✱✱-MM04T◇◇TB◆	80, 100, 120, 160, 200, 240	1	Yes	19	-	-	-	-
	0.75 kW	F3F32#✱✱✱-MR08T◇◇TN	5, 7.5, 10, 12.5, 15, 20, 25, 30, 40, 50, 60	2	No	22.5	424	□154	128	68.5
		F3F32#✱✱✱-MR08T◇◇TB◆	5, 7.5, 10, 12.5, 15, 20, 25, 30, 40, 50, 60	2	Yes	24.5	443	□154	128	68.5
	1.5 kW	F3F32#✱✱✱-MR15T◇◇TN	5, 7.5, 10, 12.5, 15, 20, 25, 30	2	No	29.5	475	□178	139	91
		F3F32#✱✱✱-MR15T◇◇TB◆	5, 7.5, 10, 12.5, 15, 20, 25, 30	2	Yes	32.5	504	□178	139	91

Note: A shaft arrangement (L, R, T) will be indicated as # in the nomenclature. In addition, a reduction ratio will be indicated as ✱✱✱, a supply voltage/certification code will be indicated as ◇◇, and a brake specification will be indicated as ◆.

Note: When the reduction ratio is 7.5, “7” will be indicated as ✱✱✱ in the nomenclature, and when the reduction ratio is 12.5, “12” will be indicated as ✱✱✱ in the nomenclature.

Note: Please refer to page 458 for the performance table.

F3F Type Concentric Right Angle Shaft | Shaft Diameter **40** | **Flange** Mounting

The values in parentheses ( ) are the indications for gearmotors with brake.

<Figure 1>

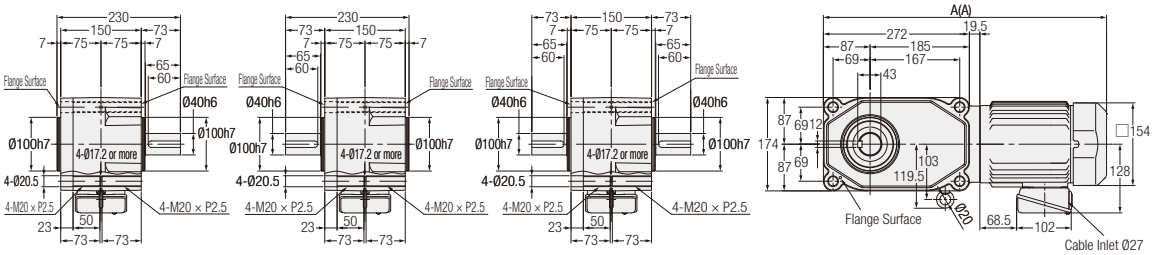

<Figure 2>

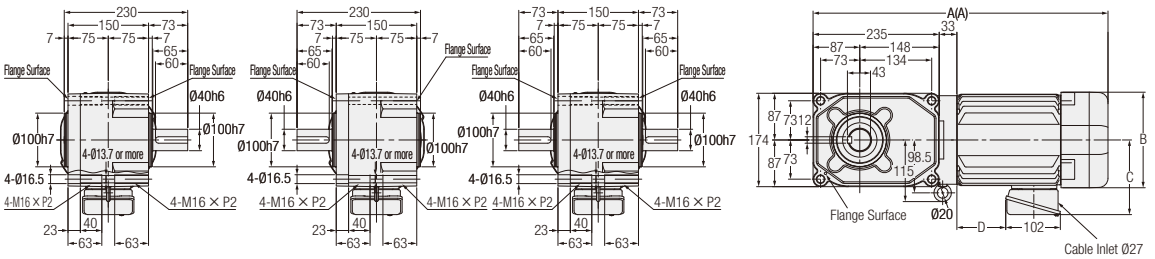

L Shaft R Shaft T Shaft

Number of Phases	Power	Part Number	Reduction Ratio	Figure Number	Brake	Approx. Weight (kg)	A	B	C	D
3-Phase	0.75 kW	F3F40#✱✱✱-MR08T◇◇TN	80, 100, 120, 160, 200, 240	1	No	30.5	508.5	-	-	-
		F3F40#✱✱✱-MR08T◇◇TB◆			Yes	32.5	527.5	-	-	-
	1.5 kW	F3F40#✱✱✱-MR15T◇◇TN	5, 7.5, 10, 12.5, 15, 20, 25, 30, 40, 50, 60	2	No	38.5	520.5	□178	139	91
		F3F40#✱✱✱-MR15T◇◇TB◆			Yes	41.5	549.5	□178	139	91
	2.2 kW	F3F40#✱✱✱-MR22T◇◇TN	5, 7.5, 10, 12.5, 15, 20, 25, 30	2	No	45	570	□192	149	140
		F3F40#✱✱✱-MR22T◇◇TB◆			Yes	48	599	□192	149	140

Note: A shaft arrangement (L, R, T) will be indicated as # in the nomenclature. In addition, a reduction ratio will be indicated as ✱✱✱, a supply voltage/certification code will be indicated as ◇◇, and a brake specification will be indicated as ◆.

Note: When the reduction ratio is 7.5, "7" will be indicated as ✱✱✱ in the nomenclature, and when the reduction ratio is 12.5, "12" will be indicated as ✱✱✱ in the nomenclature.

Note: Please refer to page 458 for the performance table.

2. IP65 Gearmotors
IP65 Gearmotors with Brake

2-1. Motor Characteristics Table

F2 Type 3-Phase Standard Voltage <Concentric Right Angle Hollow Bore/F2S>

Series	Power (W)	Voltage (V)	Frequency (Hz)	Frame Size	Rated Current (A)	Rated Speed (r/min)	Startup Current (A)
MINI	15	200/200/220	50/60/60	12	0.14/0.13/0.13	1350/1550/1600	0.30/0.28/0.31
	25	200/200/220	50/60/60	12	0.21/0.19/0.19	1350/1550/1600	0.44/0.42/0.46
	40	200/200/220	50/60/60	12	0.29/0.27/0.27	1350/1550/1600	0.67/0.62/0.68
				15	0.27/0.26/0.26	1350/1550/1550	0.73/0.69/0.76
	60	200/200/220	50/60/60	15	0.40/0.36/0.36	1350/1550/1600	1.04/0.97/1.07
	90	200/200/220	50/60/60	15	0.51/0.48/0.48	1350/1550/1550	1.42/1.36/1.49

The rated current in the motor characteristics table is the current data for the motor operating without a gearbox.
With regard to gearmotors with a brake, it is necessary to consider the current value flowing through the brake as needed.
For more details, please contact your nearest Sales Office or the CS Center.

F2 Type 1-Phase Standard Voltage <Concentric Right Angle Hollow Bore/F2S>

Series	Power (W)	Voltage (V)	Frequency (Hz)	Frame Size	Rated Current (A)	Rated Speed (r/min)	Startup Current (A)	Capacitor (μF)
MINI	15	100/100	50/60	12	0.39/0.35	1350/1650	0.72/0.67	5
	25	100/100	50/60	12	0.48/0.48	1350/1600	0.86/0.80	7
	40	100/100	50/60	15	0.61/0.66	1350/1650	1.43/1.36	10

The rated current in the motor characteristics table is the current data for the motor operating without a gearbox.
With regard to gearmotors with a brake, it is necessary to consider the current value flowing through the brake as needed.
For more details, please contact your nearest Sales Office or the CS Center.

F3 Type 3-Phase Standard Voltage/High Voltage (400 V Class)/Special Voltage <Concentric Right Angle Hollow Bore/F3S>

Series	Power	Power Supply/ Certification Codes	Voltage (V)	Frequency (Hz)	Rated Current (A)	Startup Current (A)	Rated Speed (r/min)
MID	0.1 kW	NN	200/200/220	50/60/60	0.61/0.54/0.54	2.39/2.27/2.52	1410/1690/1710
		WN	380/400/400/440	50/50/60/60	0.31/0.31/0.28/0.28	1.12/1.18/1.12/1.22	1400/1410/1690/1720
		KN	220/380	60/60	0.52/0.30	1.90/1.10	1680/1680
		CN	220/230/380	50/50/50	0.55/0.54/0.31	1.94/2.03/1.12	1400/1410/1400
		DN	220/220/380/380	50/60/50/60	0.55/0.52/0.31/0.30	1.94/1.90/1.12/1.10	1400/1680/1400/1680
		EN	415/440/480	50/50/60	0.30/0.29/0.26	1.06/1.12/1.17	1390/1420/1720
		AN	208/230/460/400	60/60/60/50	0.54/0.57/0.29/0.31	2.35/2.62/1.26/1.21	1690/1730/1730/1410
		MA	575	60	0.20	0.87	1700
	0.2 kW IE2	NN	200/200/220	50/60/60	1.1/1.0/1.0	4.70/4.35/4.85	1400/1680/1700
		WN	380/400/400/440	50/50/60/60	0.56/0.56/0.50/0.50	2.29/2.38/2.29/2.48	1390/1400/1680/1710
		KN	220/380	60/60	0.93/0.52	3.70/2.20	1680/1680
		CN	220/230/380	50/50/50	0.99/0.98/0.56	3.97/4.15/2.29	1400/1410/1390
		DN	220/220/380/380	50/60/50/60	0.99/0.93/0.56/0.52	3.97/3.70/2.29/2.20	1400/1680/1390/1680
		EN	415/440/480	50/50/60	0.50/0.50/0.45	1.75/1.86/2.00	1370/1400/1700
		AN	208/230/460/400	60/60/60/50	1.0/1.0/0.50/0.56	4.78/5.16/2.56/2.44	1680/1720/1720/1400
		MA	575	60	0.40	1.78	1710
	0.4 kW IE2	NN	200/200/220	50/60/60	2.1/1.8/1.8	9.50/8.60/9.60	1400/1680/1700
		WN	380/400/400/440	50/50/60/60	1.0/1.0/0.9/0.9	4.35/4.65/4.30/4.75	1390/1400/1680/1710
		KN	220/380	60/60	1.7/1.0	7.10/4.09	1670/1670
		CN	220/230/380	50/50/50	1.8/1.8/1.0	7.63/7.88/4.43	1390/1400/1390
		DN	220/220/380/380	50/60/50/60	1.8/1.7/1.0/1.0	7.63/7.10/4.43/4.09	1390/1670/1390/1670
		EN	415/440/480	50/50/60	0.96/0.95/0.82	3.96/4.20/4.20	1390/1410/1680
		AN	208/230/460/400	60/60/60/50	1.8/1.8/0.9/1.0	8.90/9.76/4.73/4.78	1680/1720/1720/1400
		MA	575	60	0.68	3.51	1700
	0.75 kW IE3	NN	200/200/220	50/60/60	3.5/3.2/3.1	21.8/19.0/21.1	1450/1740/1750
		WN	380/400/400/440	50/50/60/60	1.73/1.72/1.58/1.54	10.2/10.8/9.8/10.7	1440/1450/1740/1750
		KN	220/380	60/60	2.9/1.7	16.9/9.8	1740/1740
		CN	220/230/380	50/50/50	3.0/3.0/1.7	17.8/18.7/10.3	1450/1450/1440
		DN	220/220/380/380	50/60/50/60	3.1/2.9/1.8/1.7	19.3/16.9/11.2/9.8	1450/1740/1450/1740
		EN	415/440/480	50/50/60	1.54/1.52/1.36	8.6/9.3/9.0	1440/1450/1750
		UN	230/460/400	60/60/50	3.1/1.5/1.7	22.3/11.2/10.8	1760/1760/1450
		MA	575	60	1.16	7.2	1750
	1.5 kW IE3	NN	200/200/220	50/60/60	6.7/6.1/5.9	45.6/40.3/45.1	1450/1740/1760
		WN	380/400/400/440	50/50/60/60	3.4/3.4/3.1/3.0	21.9/23.2/20.4/22.8	1450/1450/1750/1760
		KN	220/380	60/60	5.9/3.4	45.1/25.8	1760/1760
		CN	220/230/380	50/50/50	5.9/5.9/3.4	38.5/40.4/22.1	1450/1450/1450
		EN	415/440/480	50/50/60	3.1/3.1/2.8	20.8/22.2/21.2	1450/1460/1760
		UN	230/460/400	60/60/50	5.9/2.9/3.3	44.9/22.6/23.2	1760/1760/1450
		MA	575	60	2.2	17.0	1760
	2.2 kW IE3	NN	200/200/220	50/60/60	9.3/8.6/8.2	70.3/56.9/63.7	1470/1760/1770
		WN	380/400/400/440	50/50/60/60	4.5/4.4/4.2/3.9	30.0/32.0/25.0/28.0	1440/1450/1740/1750
		KN	220/380	60/60	8.3/4.8	65.0/38.0	1770/1770
		CN	220/230/380	50/50/50	7.9/7.7/4.5	52.0/54.3/30.0	1460/1470/1440
		EN	415/440/480	50/50/60	4.3/4.3/3.8	33.1/35.5/29.8	1460/1470/1770
		UN	230/460/400	60/60/50	7.9/4.0/4.5	65.2/34.8/36.3	1770/1770/1470
		MA	575	60	3.3	24.4	1760

The rated current in the motor characteristics table is the current data for the motor operating without a gearbox.
With regard to gearmotors with a brake, it is necessary to consider the current value flowing through the brake as needed.
For more details, please contact your nearest Sales Office or the CS Center.

2-2. Performance Table

F2 Type IP65 Gearmotors/IP65 Gearmotors with Brake <Concentric Right Angle Hollow Bore/F2S>

[Notes]
- The values in parentheses ( ) in the drawings are the indications for gearmotors with brake.
- The output shaft speed is the value determined with the motor's synch-speed and the reduction ratio.
- Allowable output shaft O.H.L. is the value at 10 mm from the end of the output shaft.
- The "*" mark indicates a limited torque type. Please make sure to check the allowable output shaft torque in the performance table.
- The key for the output shaft is not included.
- In the performance table, the reduction ratio in ▭ indicates that when the connection is made as shown on page 546 (CW), the direction of rotation is clockwise in the case of a three-Phase motor or counterclockwise in the case of a single-Phase motor when viewed from the side indicated by arrow Ⓐ shown in the figure on the right. (Refer to the figure on the right)

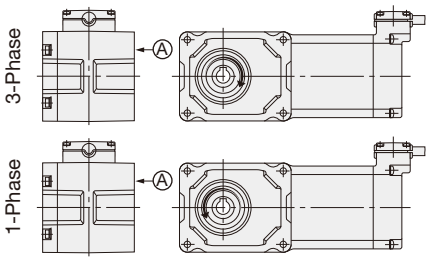

Series	Motor Power	Frame Size	Reduction Ratio	Actual Reduction Ratio	Output Shaft Speed r/min		Allowable Output Shaft Torque	Allowable Output Shaft O.H.L.	Allowable Output Shaft Thrust Load	Drawings
					50 Hz	60 Hz	N·m	N	N	
MINI	15 W	12	1/10	4/41	150	180	0.69	343	88	P.487
			1/15	8/123	100	120	0.98	441	108	
			1/20	2/41	75	90	1.27	539	137	
			1/25	8/205	60	72	1.67	588	147	
			1/30	4/123	50	60	1.96	686	177	
			1/40	1/41	37.5	45	2.65	784	195	
			1/50	4/205	30	36	3.33	882	226	
			1/60	20/1189	25	30	3.92	882	226	
			1/80	1/82	18.8	22.5	5.00	980	245	
			1/100	2/205	15	18	6.27	980	245	
			1/120	1/123	12.5	15	7.45	1080	275	
			1/160	1/164	9.4	11.2	9.80	1080	275	
			1/200	1/205	7.5	9	12.7	1080	275	
			1/240	5/1189	6.3	7.5	14.7	1080	275	
	25 W	12	1/10	4/41	150	180	1.08	343	88	P.487
			1/15	8/123	100	120	1.67	441	108	
			1/20	2/41	75	90	2.25	539	137	
			1/25	8/205	60	72	2.74	588	147	
			1/30	4/123	50	60	3.33	686	177	
			1/40	1/41	37.5	45	4.41	784	196	
			1/50	4/205	30	36	5.49	882	226	
			1/60	20/1189	25	30	6.66	882	226	
			1/80	1/82	18.8	22.5	8.43	980	245	
			1/100	2/205	15	18	10.8	980	245	
			1/120	1/123	12.5	15	12.7	1080	275	
			1/160	1/164	9.4	11.2	16.7	1080	275	
			1/200	1/205	7.5	9	20.6	1080	275	
			1/240	5/1189	6.3	7.5	25.5	1080	275	
	40 W	12 (Note 1)	1/10	4/41	150	180	1.76	343	88	P.487
			1/15	8/123	100	120	2.65	441	108	
			1/20	2/41	75	90	3.53	539	137	
			1/25	8/205	60	72	4.41	588	147	
			1/30	4/123	50	60	5.29	686	177	
			1/40	1/41	37.5	45	7.06	784	196	
			1/50	4/205	30	36	8.82	882	226	
			1/60	20/1189	25	30	10.8	882	226	
			1/80	1/82	18.8	22.5	13.7	980	245	
			1/100	2/205	15	18	16.7	980	245	
			1/120	1/123	12.5	15	20.6	1080	275	
		15	1/160	1/164	9.4	11.2	26.5	1370	343	P.488
			1/200	1/205	7.5	9	33.3	1370	343	
			1/240	1/246	6.3	7.5	40.2	1370	343	

Series	Motor Power	Frame Size	Reduction Ratio	Actual Reduction Ratio	Output Shaft Speed r/min		Allowable Output Shaft Torque	Allowable Output Shaft O.H.L.	Allowable Output Shaft Thrust Load	Drawings
					50 Hz	60 Hz	N·m	N	N	
MINI	60 W	15	1/10	4/41	150	180	2.74	343	108	P.488
			1/15	8/123	100	120	4.12	441	147	
			1/20	2/41	75	90	5.49	539	186	
			1/25	8/205	60	72	6.96	588	226	
			1/30	4/123	50	60	8.33	686	245	
			1/40	1/41	37.5	45	10.8	784	275	
			1/50	4/205	30	36	13.7	882	294	
			1/60	2/123	25	30	16.7	882	294	
			1/80	1/82	18.8	22.5	20.6	1270	324	
			1/100	2/205	15	18	26.5	1270	324	
			1/120	1/123	12.5	15	31.4	1370	343	
			1/160	1/164	9.4	11.2	42.1	1370	343	
			1/200	1/205	7.5	9	52.9	1370	343	
			* 1/240	1/246	6.3	7.5	53.9	1370	343	
	90 W	15	1/10	4/41	150	180	4.12	441	108	P.488
			1/15	8/123	100	120	6.17	588	147	
			1/20	2/41	75	90	8.33	735	186	
			1/25	8/205	60	72	10.8	882	226	
			1/30	4/123	50	60	12.7	980	245	
			1/40	1/41	37.5	45	16.7	1080	275	
			1/50	4/205	30	36	20.6	1180	294	
			1/60	2/123	25	30	24.5	1180	294	
			1/80	1/82	18.8	22.5	31.4	1270	324	
			1/100	2/205	15	18	39.2	1270	324	
			1/120	1/123	12.5	15	47.0	1370	343	
			* 1/160	1/164	9.4	11.2	53.9	1370	343	
			* 1/200	1/205	7.5	9	53.9	1370	343	
			* 1/240	1/246	6.3	7.5	53.9	1370	343	

Note 1: The frame size for Single-phase types will be 15.

F3 Type IP65 Gearmotors/IP65 Gearmotors with Brake <Concentric Right Angle Hollow Bore/F3S>

[Notes]
- The values in parentheses ( ) in the drawings are the indications for gearmotors with brake.
- The output shaft speed is the value determined with the motor's synch-speed and the reduction ratio.
- The key for the output shaft is not included.
- In the performance table, ▭ indicates that the shaft rotates clockwise when viewed from the flange surface side on the right when the connection is made as shown on page 547 (CW). (Refer to the figure on the right)
- Allowable output shaft O.H.L. is the value at 20 mm from the end of the output shaft.
- The "*" mark indicates a limited torque type. Please make sure to check the allowable output shaft torque in the performance table.

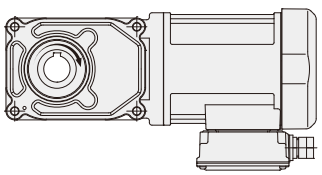

Series	Motor Power	Frame Size	Reduction Ratio	Actual Reduction Ratio	Output Shaft Speed r/min		Allowable Output Shaft Torque N·m		Allowable Output Shaft O.H.L.	Allowable Output Shaft Thrust Load	Drawings
					50 Hz	60 Hz	50 Hz	60 Hz	N	N	
MID	3-Phase 0.1 kW	20	1/5	1/5	300	360	2.5	2.2	980	244	P.489
			1/7.5	2/15	200	240	3.8	3.2	1080	270	
			1/10	1/10	150	180	5.2	4.3	1180	294	
			1/12.5	2/25	120	144	6.5	5.4	1270	316	
			1/15	1/15	100	120	7.7	6.5	1320	333	
			1/20	1/20	75	90	11	8.6	1470	373	
			1/25	1/25	60	72	13	11	1570	392	
			1/30	2/59	50	60	16	13	1670	422	
			1/40	1/40	37.5	45	21	18	1810	451	
			1/50	1/50	30	36	25	22	1860	471	
			1/60	1/59	25	30	31	25	1860	471	
		25	1/80	1/80	18.8	22.5	39	32	2550	637	P.490
			1/100	19/1880	15	18	49	41	2550	637	
			1/120	1/120	12.5	15	59	49	2550	637	
			1/160	1/160	9.4	11.3	78	66	2550	637	
			1/200	1/200	7.5	9	98	81	2550	637	
			* 1/240	1/240	6.3	7.5	101	98	2550	637	
	3-Phase 0.2 kW	20 (Small Frame Model)	1/5	1/5	300	360	5.5	4.6	980	244	P.489
			1/7.5	2/15	200	240	8.3	7	1080	270	
			1/10	1/10	150	180	11	9.2	1180	294	
			1/12.5	2/25	120	144	14	12	1270	316	
			1/15	1/15	100	120	17	14	1320	333	
			1/20	1/20	75	90	23	19	1470	373	
			1/25	1/25	60	72	27	24	1570	392	
			1/30	2/59	50	60	33	27	1670	422	
		25	1/5	1/5	300	360	5.5	4.6	1230	307	P.490
			1/7.5	2/15	200	240	8.3	7	1370	342	
			1/10	1/10	150	180	11	9.2	1520	380	
			1/12.5	19/235	120	144	14	12	1620	405	
			1/15	1/15	100	120	17	14	1720	429	
			1/20	1/20	75	90	23	19	1860	466	
			1/25	1/25	60	72	27	24	2010	502	
			1/30	1/30	50	60	33	27	2110	527	
			1/40	1/40	37.5	45	44	37	2300	576	
			1/50	1/50	30	36	55	46	2450	613	
			1/60	1/60	25	30	67	55	2550	637	
		30	1/80	1/80	18.8	22.5	84	71	3090	775	P.491
			1/100	19/1880	15	18	105	87	3140	785	
			1/120	1/120	12.5	15	126	105	3140	785	
			1/160	1/160	9.4	11.3	169	140	3140	785	
			* 1/200	1/200	7.5	9	184	175	3140	785	
			* 1/240	1/240	6.3	7.5	184	184	3140	785	

Series	Motor Power	Frame Size	Reduction Ratio	Actual Reduction Ratio	Output Shaft Speed r/min		Allowable Output Shaft Torque N·m		Allowable Output Shaft O.H.L.	Allowable Output Shaft Thrust Load	Drawings
					50 Hz	60 Hz	50 Hz	60 Hz	N	N	
MID	3-Phase 0.4 kW	25 (Small Frame Model)	1/5	1/5	300	360	11	9.2	1230	307	P.490
			1/7.5	2/15	200	240	17	14	1370	342	
			1/10	1/10	150	180	23	19	1520	380	
			1/12.5	19/235	120	144	27	24	1620	405	
			1/15	1/15	100	120	33	27	1720	429	
			1/20	1/20	75	90	44	37	1860	466	
			1/25	1/25	60	72	55	46	2010	502	
			1/30	1/30	50	60	67	55	2110	527	
		30	1/5	1/5	300	360	11	9.2	1520	375	P.491
			1/7.5	2/15	200	240	17	14	1760	438	
			1/10	1/10	150	180	23	19	1910	475	
			1/12.5	19/235	120	144	27	24	2060	506	
			1/15	1/15	100	120	33	27	2160	539	
			1/20	1/20	75	90	44	37	2400	600	
			1/25	1/25	60	72	55	46	2550	637	
			1/30	1/30	50	60	67	55	2650	662	
			1/40	1/40	37.5	45	88	74	2840	711	
			1/50	1/50	30	36	111	92	2990	747	
			1/60	1/60	25	30	133	111	3090	767	
		35	1/80	1/80	18.8	22.5	169	140	3480	873	P.492
			1/100	19/1880	15	18	211	175	3530	883	
			1/120	1/120	12.5	15	253	211	3530	883	
			* 1/160	1/160	9.4	11.3	270	270	3630	912	
			* 1/200	1/200	7.5	9	270	270	3630	912	
			* 1/240	1/240	6.3	7.5	270	270	3630	912	
	3-Phase 0.75 kW	30 (Small Frame Model)	1/5	1/5	300	360	21	18	1520	375	P.491
			1/7.5	2/15	200	240	31	25	1760	438	
			1/10	1/10	150	180	41	34	1910	475	
			1/12.5	19/235	120	144	52	43	2060	506	
			1/15	1/15	100	120	63	52	2160	539	
			1/20	1/20	75	90	83	70	2400	600	
			1/25	1/25	60	72	104	86	2550	637	
			1/30	1/30	50	60	124	104	2650	662	
		35	1/5	1/5	300	360	21	18	1960	500	P.492
			1/7.5	2/15	200	240	31	25	2250	567	
			1/10	1/10	150	180	41	34	2450	613	
			1/12.5	19/235	120	144	52	43	2600	669	
			1/15	1/15	100	120	63	52	2740	686	
			1/20	1/20	75	90	83	70	2990	747	
			1/25	1/25	60	72	104	86	3190	796	
			1/30	1/30	50	60	124	104	3280	821	
			1/40	1/40	37.5	45	166	138	3480	870	
			1/50	1/50	30	36	208	173	3480	870	
			1/60	1/60	25	30	249	208	3480	870	
		45	1/80	1/80	18.8	22.5	316	263	4750	1177	P.493
			1/100	19/1880	15	18	395	328	4750	1177	
			1/120	1/120	12.5	15	473	395	4750	1177	
			* 1/160	1/160	9.4	11.3	554	526	5190	1275	
			* 1/200	1/200	7.5	9	554	554	5190	1275	
			* 1/240	1/240	6.3	7.5	554	554	5190	1275	

Series	Motor Power	Frame Size	Reduction Ratio	Actual Reduction Ratio	Output Shaft Speed r/min		Allowable Output Shaft Torque N·m		Allowable Output Shaft O.H.L.	Allowable Output Shaft Thrust Load	Drawings
					50 Hz	60 Hz	50 Hz	60 Hz	N	N	
MID	3-Phase 1.5 kW	35 (Small Frame Model)	1/5	1/5	300	360	41	34	1960	500	P.492
			1/7.5	2/15	200	240	63	52	2250	567	
			1/10	1/10	150	180	83	70	2450	613	
			1/12.5	19/235	120	144	104	86	2600	669	
			1/15	1/15	100	120	124	104	2740	686	
			1/20	1/20	75	90	166	138	2990	747	
			1/25	1/25	60	72	208	173	3190	796	
			1/30	1/30	50	60	249	208	3280	821	
		45	1/5	1/5	300	360	41	34	2940	800	P.493
			1/7.5	2/15	200	240	63	52	3330	900	
			1/10	1/10	150	180	83	70	3630	967	
			1/12.5	19/235	120	144	104	86	3920	1040	
			1/15	1/15	100	120	124	104	4070	1067	
			1/20	1/20	75	90	166	138	4460	1067	
			1/25	1/25	60	72	208	173	4700	1067	
			1/30	1/30	50	60	249	208	4750	1067	
			1/40	1/40	37.5	45	332	276	4750	1067	
			1/50	1/50	30	36	416	345	4750	1067	
			1/60	1/60	25	30	498	416	4750	1067	
	3-Phase 2.2 kW	45	1/5	1/5	300	360	61	51	3140	800	P.493
			1/7.5	2/15	200	240	91	76	3530	900	
			1/10	1/10	150	180	122	102	3920	967	
			1/12.5	19/235	120	144	152	126	4120	1040	
			1/15	1/15	100	120	182	152	4410	1067	
			1/20	1/20	75	90	244	203	4750	1067	
			1/25	1/25	60	72	305	254	4750	1067	
			1/30	1/30	50	60	366	305	4750	1067	

• Please read the notes on page 484.

2-3. Drawings

F2S Type Concentric Right Angle Hollow Bore | Shaft Diameter 12 | **Flange** Mounting

The values in parentheses ( ) are the indications for gearmotors with brake.

<Figure 1>

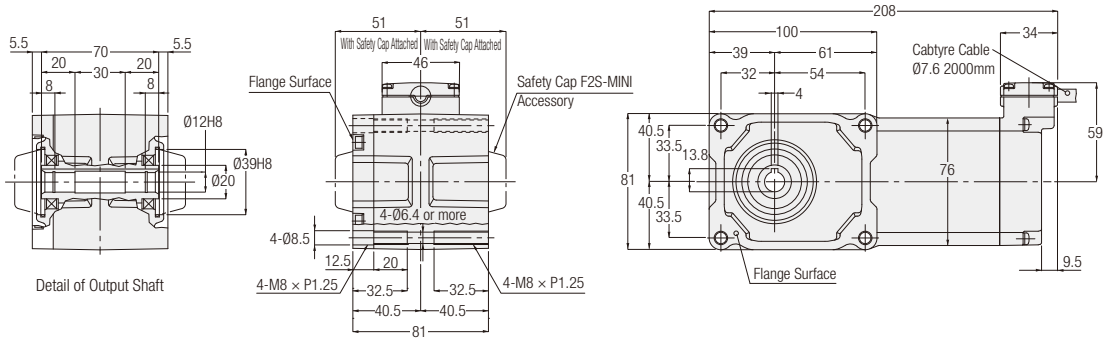

<Figure 2>

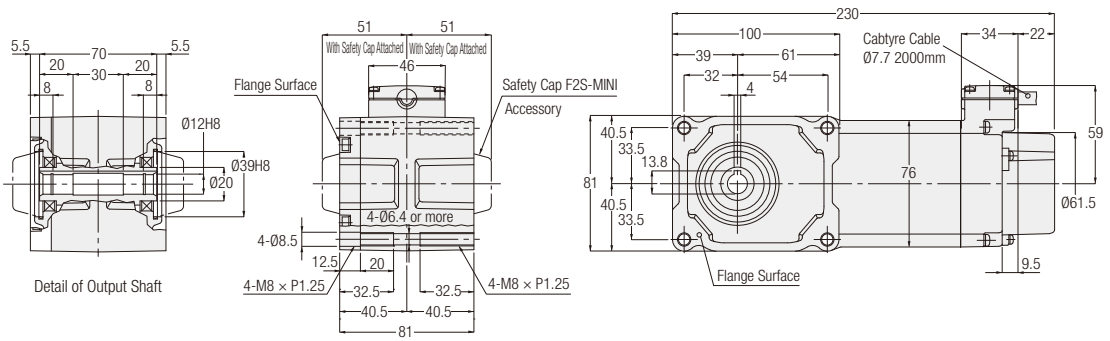

Number of Phases	Power	Part Number	Reduction Ratio	Figure Number	Brake	Approx. Weight (kg)
3-Phase	15 W	F2SW-12-✱✱✱-T15	10, 15, 20, 25, 30, 40, 50, 60, 80, 100, 120, 160, 200, 240	1	No	3.5
		F2SV-12-✱✱✱-T15		2	Yes	4
	25 W	F2SW-12-✱✱✱-T25	10, 15, 20, 25, 30, 40, 50, 60, 80, 100, 120, 160, 200, 240	1	No	3.5
		F2SV-12-✱✱✱-T25		2	Yes	4
	40 W	F2SW-12-✱✱✱-T40	10, 15, 20, 25, 30, 40, 50, 60, 80, 100, 120	1	No	3.5
		F2SV-12-✱✱✱-T40		2	Yes	4
1-Phase	15 W	F2SW-12-✱✱✱-S15	10, 15, 20, 25, 30, 40, 50, 60, 80, 100, 120, 160, 200, 240	1	No	3.5
		F2SV-12-✱✱✱-S15		2	Yes	4
	25 W	F2SW-12-✱✱✱-S25	10, 15, 20, 25, 30, 40, 50, 60, 80, 100, 120, 160, 200, 240	1	No	3.5
		F2SV-12-✱✱✱-S25		2	Yes	4

Note: A reduction ratio will be indicated as ✱✱✱ in the nomenclature.
Note: Please refer to page 482 for the performance table.

F2S Type Concentric Right Angle Hollow Bore | Shaft Diameter 15 | Flange Mounting

The values in parentheses ( ) are the indications for gearmotors with brake.

<Figure 1>

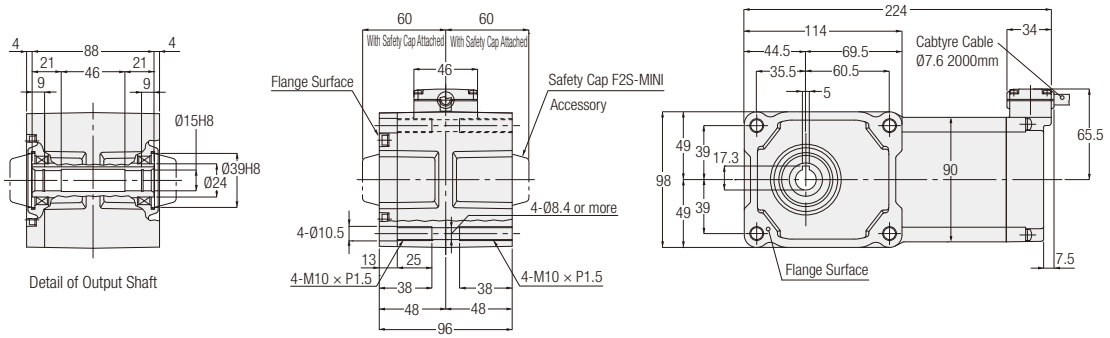

<Figure 2>

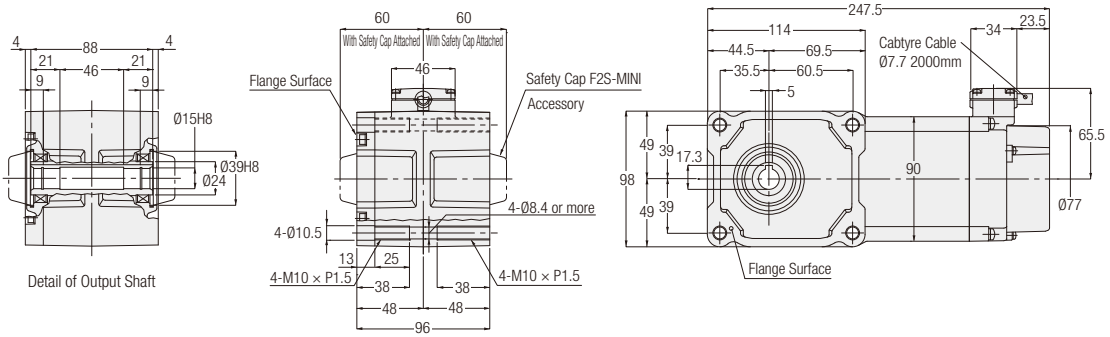

Number of Phases	Power	Part Number	Reduction Ratio	Figure Number	Brake	Approx. Weight (kg)
3-Phase	40 W	F2SW-15-✱✱✱-T40	160, 200, 240	1	No	4.5
		F2SV-15-✱✱✱-T40		2	Yes	5
	60 W	F2SW-15-✱✱✱-T60	10, 15, 20, 25, 30, 40, 50, 60, 80, 100, 120, 160, 200, 240	1	No	4.5
		F2SV-15-✱✱✱-T60		2	Yes	5
	90 W	F2SW-15-✱✱✱-T90	10, 15, 20, 25, 30, 40, 50, 60, 80, 100, 120, 160, 200, 240	1	No	4.5
		F2SV-15-✱✱✱-T90		2	Yes	5
1-Phase	40 W	F2SW-15-✱✱✱-S40	10, 15, 20, 25, 30, 40, 50, 60, 80, 100, 120, 160, 200, 240	1	No	4.5
		F2SV-15-✱✱✱-S40		2	Yes	5

Note: A reduction ratio will be indicated as ✱✱✱ in the nomenclature.
Note: Please refer to page 482 for the performance table.

F3S Type Concentric Right Angle Hollow Bore | Shaft Diameter **20** | **Flange** Mounting

The values in parentheses ( ) are the indications for gearmotors with brake.

<Figure 1>

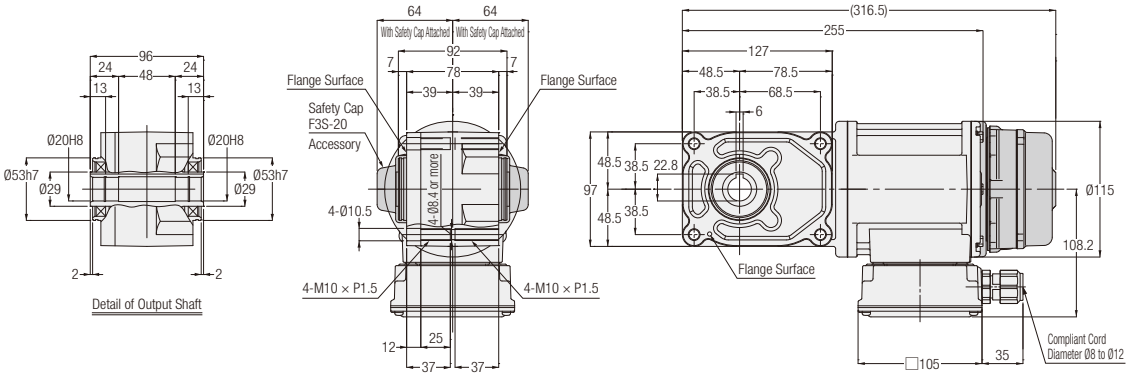

<Figure 2>

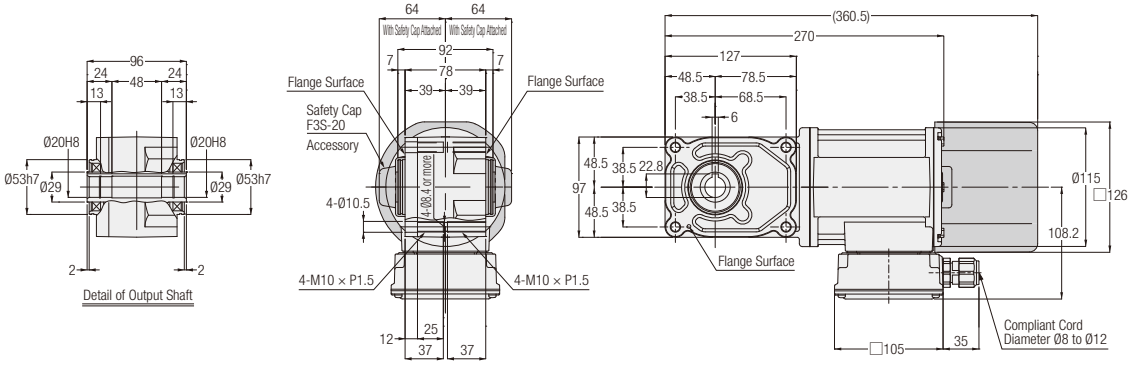

Number of Phases	Power	Output Shaft: Stainless Steel	Output Shaft: Carbon Steel	Reduction Ratio	Figure Number	Brake	Approx. Weight (kg)
3-Phase	0.1 kW	F3S20S***-WM01T◇◇EN	F3S20N***-WM01T◇◇EN	5, 7.5, 10, 12.5, 15, 20, 25, 30, 40, 50, 60	1	No	6.5
		F3S20S***-WM01T◇◇EV◆	F3S20N***-WM01T◇◇EV◆			Yes	8
	0.2 kW	F3S20S***-WM02T◇◇EN	F3S20N***-WM02T◇◇EN	5, 7.5, 10, 12.5, 15, 20, 25, 30	2	No	7.5
		F3S20S***-WM02T◇◇EV◆	F3S20N***-WM02T◇◇EV◆			Yes	9

Note: A reduction ratio will be indicated as *** in the nomenclature. In addition, a supply voltage/certification code will be indicated as ◇◇, and brake specification will be indicated as ◆.

Note: When the reduction ratio is 7.5, “7” will be indicated as *** in the nomenclature, and when the reduction ratio is 12.5, “12” will be indicated as *** in the nomenclature.

Note: Please refer to page 484 for the performance table.

F3S Type Concentric Right Angle Hollow Bore — Shaft Diameter 25 — Flange Mounting

The values in parentheses ( ) are the indications for gearmotors with brake.

<Figure 1>

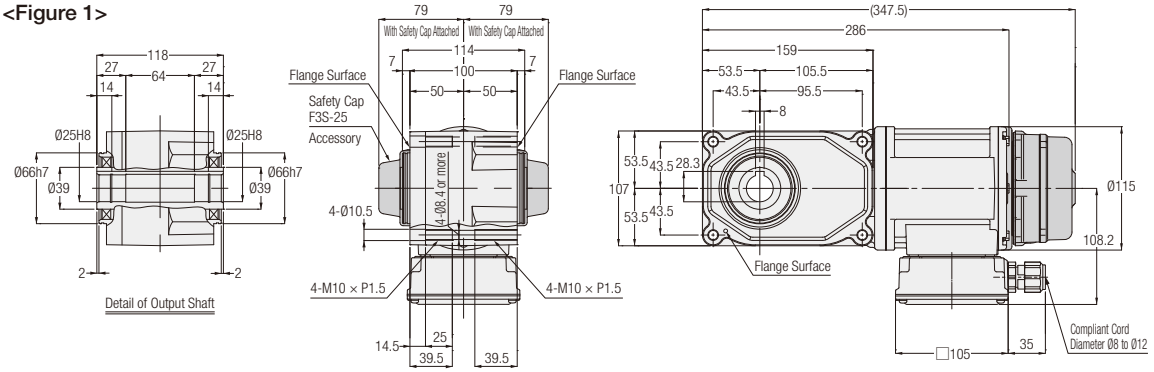

<Figure 2>

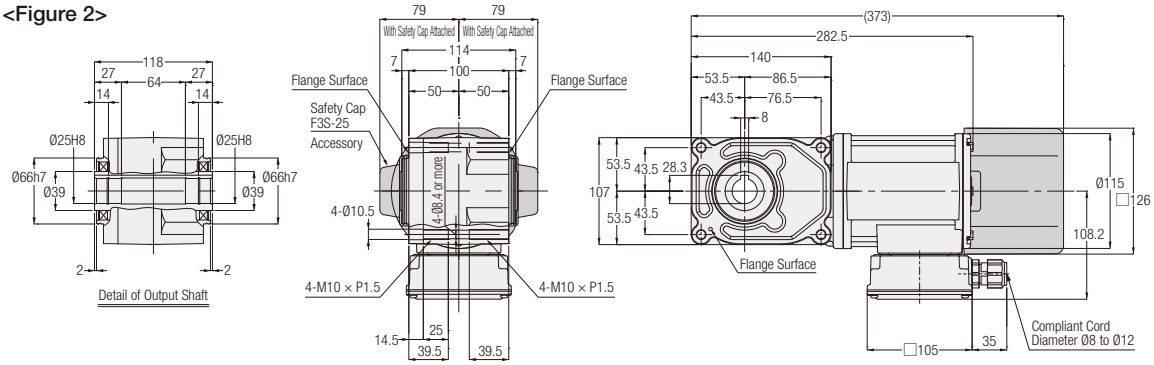

<Figure 3>

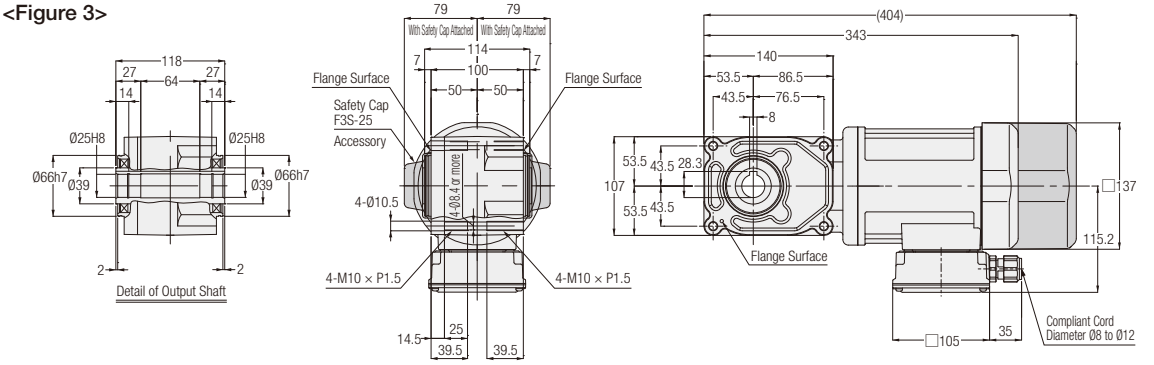

Number of Phases	Power	Output Shaft: Stainless Steel	Output Shaft: Carbon Steel	Reduction Ratio	Figure Number	Brake	Approx. Weight (kg)
3-Phase	0.1 kW	F3S25S✱✱✱-WM01T◇◇EN	F3S25N✱✱✱-WM01T◇◇EN	80, 100, 120, 160, 200, 240	1	No	8
		F3S25S✱✱✱-WM01T◇◇EV◆	F3S25N✱✱✱-WM01T◇◇EV◆			Yes	9.5
	0.2 kW	F3S25S✱✱✱-WM02T◇◇EN	F3S25N✱✱✱-WM02T◇◇EN	5, 7.5, 10, 12.5, 15, 20, 25, 30, 40, 50, 60	2	No	8.5
		F3S25S✱✱✱-WM02T◇◇EV◆	F3S25N✱✱✱-WM02T◇◇EV◆			Yes	10
	0.4 kW	F3S25S✱✱✱-WM04T◇◇EN	F3S25N✱✱✱-WM04T◇◇EN	5, 7.5, 10, 12.5, 15, 20, 25, 30	3	No	10.5
		F3S25S✱✱✱-WM04T◇◇EV◆	F3S25N✱✱✱-WM04T◇◇EV◆			Yes	12

Note: A reduction ratio will be indicated as ✱✱✱ in the nomenclature. In addition, a supply voltage/certification code will be indicated as ◇◇, and brake specification will be indicated as ◆.

Note: When the reduction ratio is 7.5, "7" will be indicated as ✱✱✱ in the nomenclature, and when the reduction ratio is 12.5, "12" will be indicated as ✱✱✱ in the nomenclature.

Note: Please refer to page 484 for the performance table.

F3S Type Concentric Right Angle Hollow Bore | Shaft Diameter **30** | **Flange** Mounting

The values in parentheses ( ) are the indications for gearmotors with brake.

<Figure 1>

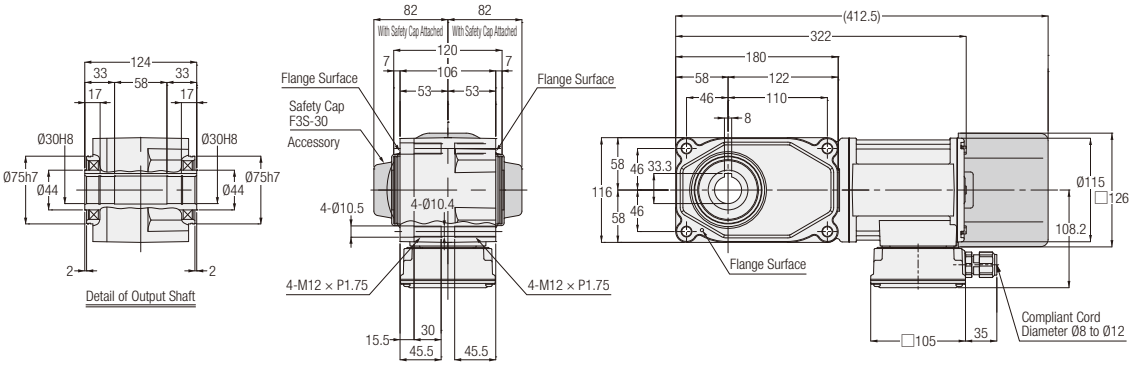

<Figure 2>

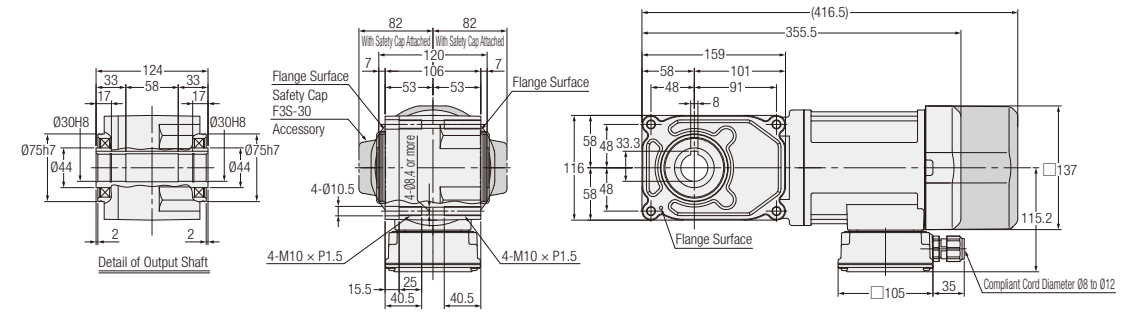

<Figure 3>

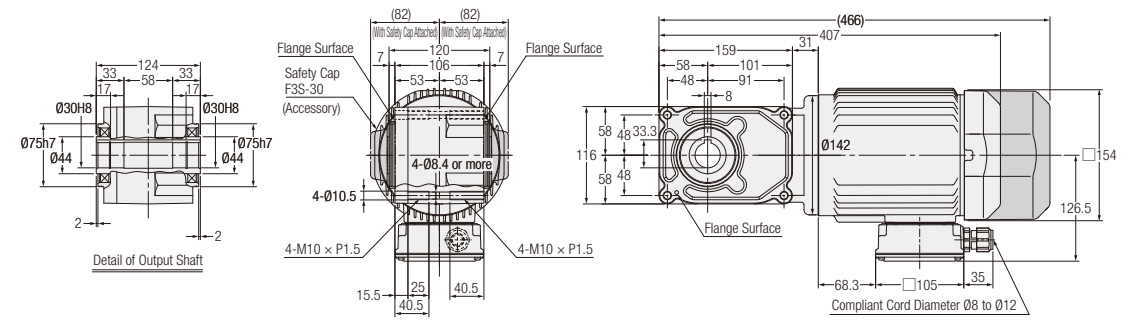

Number of Phases	Power	Output Shaft: Stainless Steel	Output Shaft: Carbon Steel	Reduction Ratio	Figure Number	Brake	Approx. Weight (kg)
3-Phase	0.2 kW	F3S30S✱✱✱-WM02T◇◇EN	F3S30N✱✱✱-WM02T◇◇EN	80, 100, 120, 160, 200, 240	1	No	10
		F3S30S✱✱✱-WM02T◇◇EV◆	F3S30N✱✱✱-WM02T◇◇EV◆			Yes	11.5
	0.4 kW	F3S30S✱✱✱-WM04T◇◇EN	F3S30N✱✱✱-WM04T◇◇EN	5, 7.5, 10, 12.5, 15, 20, 25, 30, 40, 50, 60	2	No	11.5
		F3S30S✱✱✱-WM04T◇◇EV◆	F3S30N✱✱✱-WM04T◇◇EV◆			Yes	13
	0.75 kW	F3S30S✱✱✱-WR08T◇◇EN	F3S30N✱✱✱-WR08T◇◇EN	5, 7.5, 10, 12.5, 15, 20, 25, 30	3	No	18.5
		F3S30S✱✱✱-WR08T◇◇EV◆	F3S30N✱✱✱-WR08T◇◇EV◆			Yes	20.5

Note: A reduction ratio will be indicated as ✱✱✱ in the nomenclature. In addition, a supply voltage/certification code will be indicated as ◇◇, and brake specification will be indicated as ◆.

Note: When the reduction ratio is 7.5, "7" will be indicated as ✱✱✱ in the nomenclature, and when the reduction ratio is 12.5, "12" will be indicated as ✱✱✱ in the nomenclature.

Note: Please refer to page 484 for the performance table.

F3S Type Concentric Right Angle Hollow Bore | Shaft Diameter 35 | Flange Mounting

The values in parentheses ( ) are the indications for gearmotors with brake.

<Figure 1>

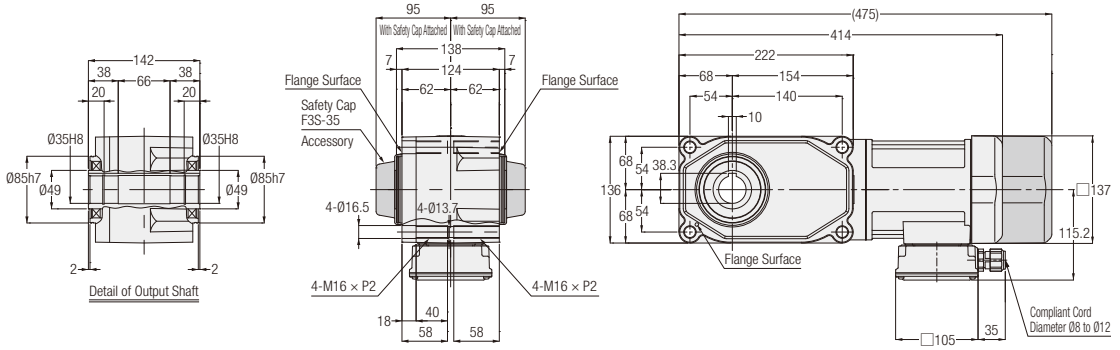

<Figure 2>

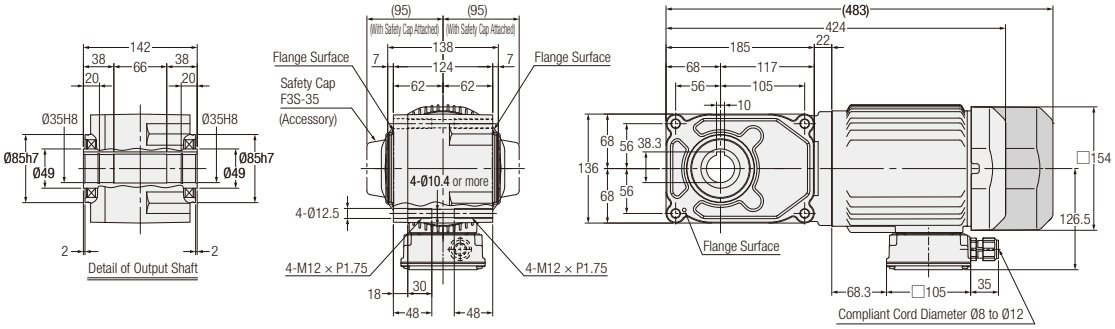

Note: Gearmotors with a motor power of 0.75 kW does not include the hanging plate.

<Figure 3>

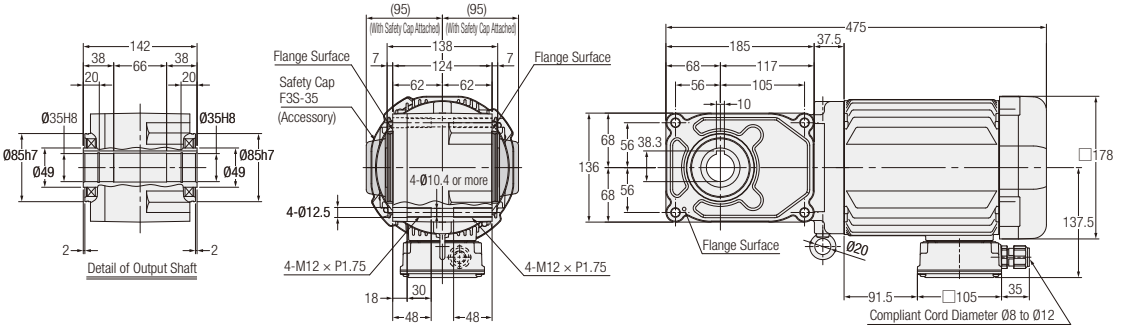

Number of Phases	Power	Output Shaft: Stainless Steel	Output Shaft: Carbon Steel	Reduction Ratio	Figure Number	Brake	Approx. Weight (kg)
3-Phase	0.4 kW	F3S35S✱✱✱-WM04T◇◇EN	F3S35N✱✱✱-WM04T◇◇EN	80, 100, 120, 160, 200, 240	1	No	15
		F3S35S✱✱✱-WM04T◇◇EV◆	F3S35N✱✱✱-WM04T◇◇EV◆			Yes	17
	0.75 kW	F3S35S✱✱✱-WR08T◇◇EN	F3S35N✱✱✱-WR08T◇◇EN	5, 7.5, 10, 12.5, 15, 20, 25, 30, 40, 50, 60	2	No	21
		F3S35S✱✱✱-WR08T◇◇EV◆	F3S35N✱✱✱-WR08T◇◇EV◆			Yes	23
	1.5 kW	F3S35S✱✱✱-WR15T◇◇EN	F3S35N✱✱✱-WR15T◇◇EN	5, 7.5, 10, 12.5, 15, 20, 25, 30	3	No	28

Note: A reduction ratio will be indicated as ✱✱✱ in the nomenclature. In addition, a supply voltage/certification code will be indicated as ◇◇, and brake specification will be indicated as ◆.
Note: When the reduction ratio is 7.5, "7" will be indicated as ✱✱✱ in the nomenclature, and when the reduction ratio is 12.5, "12" will be indicated as ✱✱✱ in the nomenclature.
Note: There are no gearmotors with motor power of 1.5 kW that have a brake.
Note: Please refer to page 485 for the performance table.

F3S Type Concentric Right Angle Hollow Bore | Shaft Diameter **45** | **Flange** Mounting

The values in parentheses ( ) are the indications for gearmotors with brake.

<Figure 1>

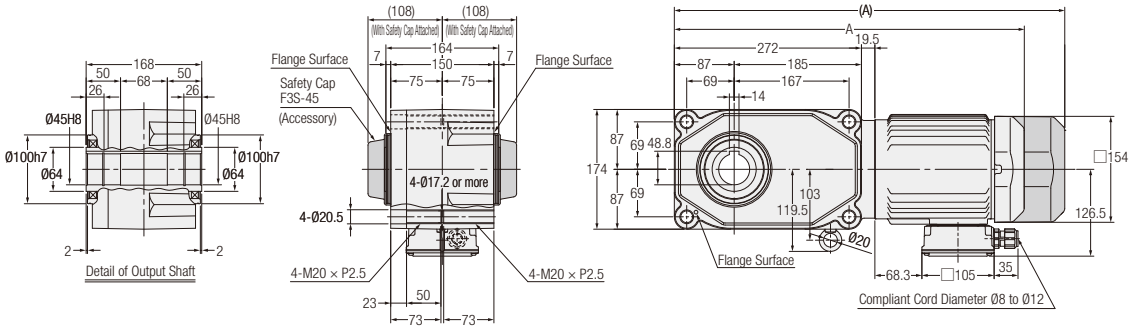

<Figure 2>

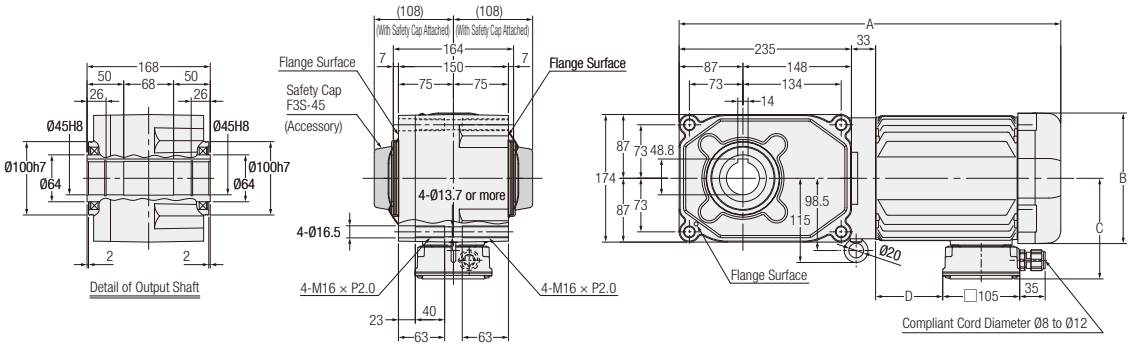

Number of Phases	Power	Output Shaft: Stainless Steel	Output Shaft: Carbon Steel	Reduction Ratio	Figure Number	Brake	Approx. Weight (kg)	A	B	C	D
3-Phase	0.75 kW	F3S45S✱✱✱-WR08T◇◇EN	F3S45N✱✱✱-WR08T◇◇EN	80, 100, 120, 160, 200, 240	1	No	28.5	508.5	-	-	-
		F3S45S✱✱✱-WR08T◇◇EV◆	F3S45N✱✱✱-WR08T◇◇EV◆			Yes	30.5	567.5	-	-	-
	1.5 kW	F3S45S✱✱✱-WR15T◇◇EN	F3S45N✱✱✱-WR15T◇◇EN	5, 7.5, 10, 12.5, 15, 20, 25, 30, 40, 50, 60	2	No	35.5	520.5	□178	137.5	91.5
	2.2 kW	F3S45S✱✱✱-WR22T◇◇EN	F3S45N✱✱✱-WR22T◇◇EN	5, 7.5, 10, 12.5, 15, 20, 25, 30	2	No	42	570	□192	147.5	140.5

Note: A reduction ratio will be indicated as ✱✱✱ in the nomenclature. In addition, a supply voltage/certification code will be indicated as ◇◇, and brake specification will be indicated as ◆.

Note: When the reduction ratio is 7.5, "7" will be indicated as ✱✱✱ in the nomenclature, and when the reduction ratio is 12.5, "12" will be indicated as ✱✱✱ in the nomenclature.

Note: There are no gearmotors with motor power of 1.5 kW and 2.2 kW that have a brake.

Note: Please refer to page 485 for the performance table.

3. Speed Control Gearmotors

3-1. Properties and Motor Characteristics Table

Properties

This gearmotor can be controlled under a wide speed range of 50 to 1400 r/min(50 Hz) or 50 to 1700 r/min(60 Hz)with a designated speed controller via a rate generator (AC generator) installed on the motor.

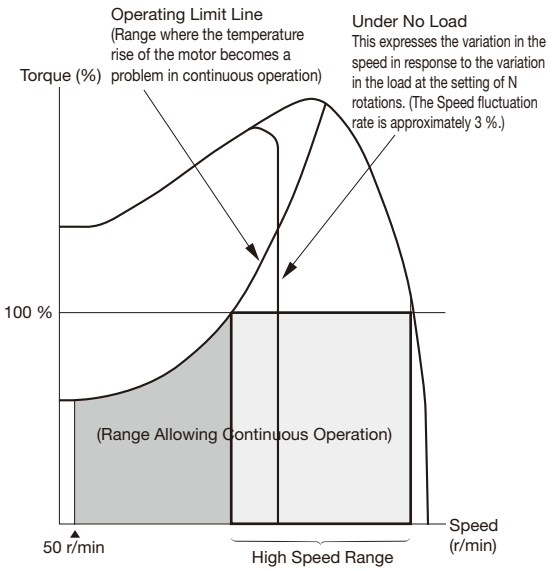

■ Features

❶ Wide variable speed range
Our original circuit design enables the induction gearmotor to operate continuously from a low speed range of 50 r/min.

Power Source Frequency	Variable speed range
50 Hz	50 to 1400 r/min
60 Hz	50 to 1700 r/min

❷ Outstanding output characteristic
The induction motor has a high allowable load torque value in the low speed range and has a wide high-speed range characteristic as shown in the figure on the right.

❸ Wide variety of types
Products available in eight main types according to applications: two U types (100 V, 200 V) connectable by means of a lead wire with a connector and six plug-in P types (100 V, 200 V).
Note: Please refer to page 631 for detailed specifications.

Note: The same speed can be obtained from a speed control gearmotor, regardless of the power source frequency. For example, a speed set in the 50 Hz region remains unchanged in the 60 Hz region, and the same speed can be obtained. (However, the maximum speed is within the range of 1400 r/min.)

Motor Characteristics Table

F2 Type 1-Phase (Speed Control Gearmotors) <Concentric Right Angle Hollow Bore/F2S, Concentric Right Angle Shaft/F2F>

Power (W)	Voltage (V)	Frequency (Hz)	Frame Size	Max Current (A)	High Speed Range (r/min)	Capacitor (μF)
15 W	100/100	50/60	12(15)	0.6/0.6	500 to 1350/550 to 1650	6
	200/200	50/60	12(15)	0.3/0.3	600 to 1400/750 to 1700	1.5
25 W	100/100	50/60	12(15)	0.6/0.6	750 to 1350/1000 to 1650	8
	200/200	50/60	12(15)	0.4/0.4	850 to 1350/1000 to 1650	2
40 W	100/100	50/60	15(18)	0.9/0.9	800 to 1350/1050 to 1650	12
	200/200	50/60	15(18)	0.5/0.5	900 to 1350/1300 to 1650	3
60 W	100/100	50/60	15(18)	1.0/1.7	700 to 1350/800 to 1650	20
	200/200	50/60	15(18)	0.8/0.9	700 to 1350/800 to 1650	5
90 W	100/100	50/60	15(18)	1.4/2.0	950 to 1300/1150 to 1600	26
	200/200	50/60	15(18)	0.9/1.0	1000 to 1350/1150 to 1600	6.5

Note: The number in the parentheses indicates the frame size of the right angle shaft model.

3-2. Graph for Speed Characteristics

Torque-Speed Characteristic Graph

<1-Phase 15 W>

■100 V

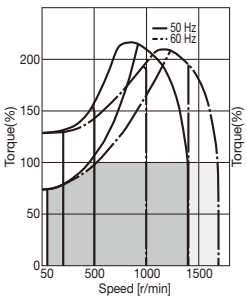

■200 V

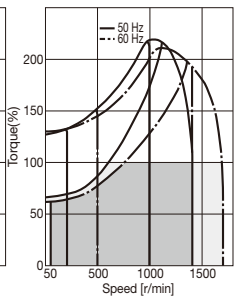

<1-Phase 25 W>

■100 V

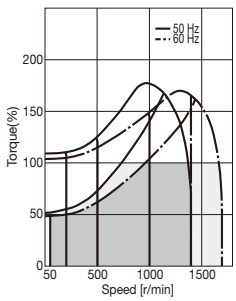

■200 V

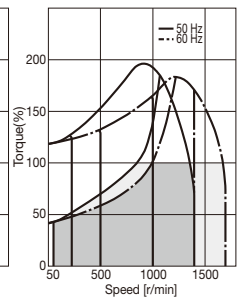

<1-Phase 40 W>

■100 V

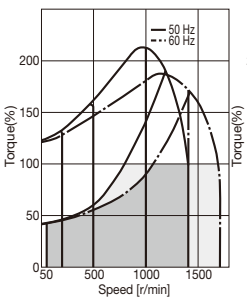

■200 V

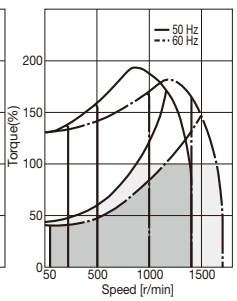

<1-Phase 60 W>

■100 V

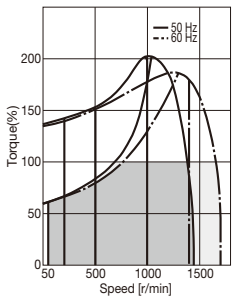

■200 V

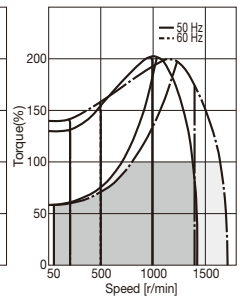

<1-Phase 90 W>

■100 V

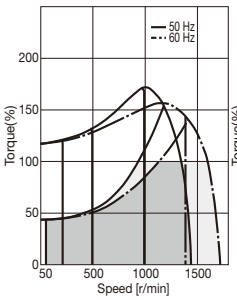

■200 V

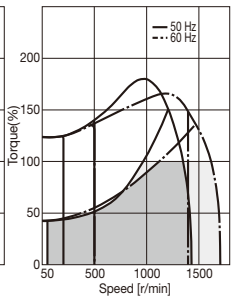

Note: 100 % torque represents the allowable output shaft torque at high speed.

3-3. Performance Table

F2 Type Speed Control Gearmotors <Concentric Right Angle Hollow Bore/F2S>

[Notes]
- The output shaft speed is the value determined with the motor's synch-speed and the reduction ratio.
- Allowable output shaft O.H.L. is the value at 10 mm from the end of the output shaft.
- The "*" mark indicates a limited torque type. Please make sure to check the allowable output shaft torque in the performance table.
- The key for the output shaft is not included.
- In the performance table, the reduction ratio in ▭ indicates that the direction of rotation is clockwise when viewed from the side indicated by arrow Ⓐ shown in the figure on the right when the connection is made as shown on page 546 (CW).

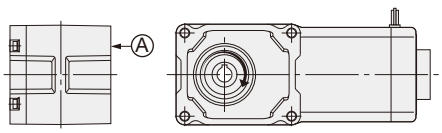

Series	Motor Power	Frame Size	Reduction Ratio	Actual Reduction Ratio	Output Shaft Speed r/min 50 Hz	Output Shaft Speed r/min 60 Hz	Allowable Output Shaft O.H.L. N	Allowable Output Shaft Thrust Load N	Allowable Output Shaft Torque at High Speed N·m	Allowable Output Shaft Torque At 50 r/min (%)	Drawings
MINI	15 W	12	1/10	4/41	150	180	343	88	0.69	70 (100 V) 60 (200 V)	P.500
			1/15	8/123	100	120	441	108	0.98		
			1/20	2/41	75	90	539	137	1.27		
			1/25	8/205	60	72	588	147	1.67		
			1/30	4/123	50	60	686	177	1.96		
			1/40	1/41	37.5	45	784	195	2.65		
			1/50	4/205	30	36	882	226	3.33		
			1/60	20/1189	25	30	882	226	3.92		
			1/80	1/82	18.8	22.5	980	245	5.00		
			1/100	2/205	15	18	980	245	6.27		
			1/120	1/123	12.5	15	1080	275	7.45		
			1/160	1/164	9.4	11.2	1080	275	9.80		
			1/200	1/205	7.5	9	1080	275	12.7		
			1/240	5/1189	6.3	7.5	1080	275	14.7		
	25 W	12	1/10	4/41	150	180	343	88	1.08	50 (100 V) 45 (200 V)	P.500
			1/15	8/123	100	120	441	108	1.67		
			1/20	2/41	75	90	539	137	2.25		
			1/25	8/205	60	72	588	147	2.74		
			1/30	4/123	50	60	686	177	3.33		
			1/40	1/41	37.5	45	784	196	4.41		
			1/50	4/205	30	36	882	226	5.49		
			1/60	20/1189	25	30	882	226	6.66		
			1/80	1/82	18.8	22.5	980	245	8.43		
			1/100	2/205	15	18	980	245	10.8		
			1/120	1/123	12.5	15	1080	275	12.7		
			1/160	1/164	9.4	11.2	1080	275	16.7		
			1/200	1/205	7.5	9	1080	275	20.6		
			1/240	5/1189	6.3	7.5	1080	275	25.5		
	40 W	15	1/10	4/41	150	180	343	108	1.76	40 (100 V) (200 V)	P.501
			1/15	8/123	100	120	441	147	2.65		
			1/20	2/41	75	90	539	186	3.53		
			1/25	8/205	60	72	588	226	4.41		
			1/30	4/123	50	60	686	245	5.29		
			1/40	1/41	37.5	45	784	275	7.06		
			1/50	4/205	30	36	882	294	8.82		
			1/60	20/1189	25	30	882	294	10.8		
			1/80	1/82	18.8	22.5	980	324	13.7		
			1/100	2/205	15	18	980	324	16.7		
			1/120	1/123	12.5	15	1080	343	20.6		
			1/160	1/164	9.4	11.2	1370	343	26.5		
			1/200	1/205	7.5	9	1370	343	33.3		
			1/240	1/246	6.3	7.5	1370	343	40.2		

Series	Motor Power	Frame Size	Reduction Ratio	Actual Reduction Ratio	Output Shaft Speed r/min 50 Hz	Output Shaft Speed r/min 60 Hz	Allowable Output Shaft O.H.L. N	Allowable Output Shaft Thrust Load N	Allowable Output Shaft Torque at High Speed N·m	Allowable Output Shaft Torque At 50 r/min (%)	Drawings
MINI	60 W	15	1/10	4/41	150	180	343	108	2.74	60 (100 V) 55 (200 V)	P.501
			1/15	8/123	100	120	441	147	4.12		
			1/20	2/41	75	90	539	186	5.49		
			1/25	8/205	60	72	588	226	6.96		
			1/30	4/123	50	60	686	245	8.33		
			1/40	1/41	37.5	45	784	275	10.8		
			1/50	4/205	30	36	882	294	13.7		
			1/60	2/123	25	30	882	294	16.7		
			1/80	1/82	18.8	22.5	1270	324	20.6		
			1/100	2/205	15	18	1270	324	26.5		
			1/120	1/123	12.5	15	1370	343	31.4		
			1/160	1/164	9.4	11.2	1370	343	42.1		
			1/200	1/205	7.5	9	1370	343	52.9		
			* 1/240	1/246	6.3	7.5	1370	343	53.9		
	90 W	15	1/10	4/41	150	180	441	108	4.12	40	P.501
			1/15	8/123	100	120	588	147	6.17		
			1/20	2/41	75	90	735	186	8.33		
			1/25	8/205	60	72	882	226	10.8		
			1/30	4/123	50	60	980	245	12.7		
			1/40	1/41	37.5	45	1080	275	16.7		
			1/50	4/205	30	36	1180	294	20.6		
			1/60	2/123	25	30	1180	294	24.5		
			1/80	1/82	18.8	22.5	1270	324	31.4		
			1/100	2/205	15	18	1270	324	39.2		
			1/120	1/123	12.5	15	1370	343	47.0		
			* 1/160	1/164	9.4	11.2	1370	343	53.9		
			* 1/200	1/205	7.5	9	1370	343	53.9		
			* 1/240	1/246	6.3	7.5	1370	343	53.9		

F2 Type Speed Control Gearmotors <Concentric Right Angle Shaft/F2F>

[Notes]
- The output shaft speed is the value determined with the motor's synch-speed and the reduction ratio.
- Allowable output shaft O.H.L. is the value at the middle of the output shaft.
- The "*" mark indicates a limited torque type. Please make sure to check the allowable output shaft torque in the performance table.
- In the performance table, the reduction ratio in ▭ indicates that the direction of rotation is clockwise when viewed from the side indicated by arrow Ⓐ shown in the figure on the right when the connection is made as shown on page 546 (CW).

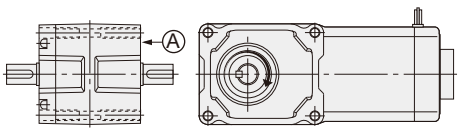

■ F2F (right angle shaft) shaft arrangement

The L shaft of the F2F (concentric right angle shaft) is as shown in [Figure-1]. The F2 type is designed for concentric flange mounting on both sides, and the output shaft can therefore be positioned on the right side as shown in [Figure-2] by rotating the gearmotor to 180 ° about the motor shaft. In this case, however, the lead wires will be in the lower position. If you want to set the lead wires in the upper position for the convenience of use, place an order for the lead wire lower position (option code "T6") for a standard product [Figure-1]. By rotating the gearmotor to 180 ° in this state, the output shaft will be positioned on the right side with the lead wires in the upper position. Please refer to page 581 for changes of the lead wire position.

<Figure when viewed from the motor side>

When the output shaft is an L shaft, it is on the left side when viewed from the motor side with the lead wires in the upper position.

[Figure-1] Lead Wire Position [Figure-2]

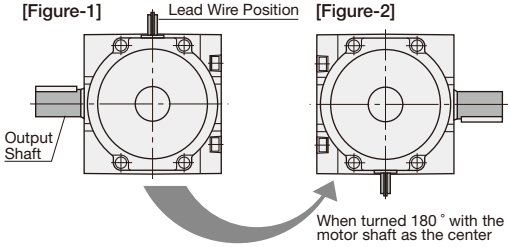

Series	Motor Power	Frame Size	Reduction Ratio	Actual Reduction Ratio	Output Shaft Speed r/min 50 Hz	Output Shaft Speed r/min 60 Hz	Allowable Output Shaft O.H.L. N	Allowable Output Shaft Torque at High Speed N·m	Allowable Output Shaft Torque At 50 r/min (%)	Drawings
MINI	15 W	15	1/10	4/41	150	180	343	0.69	70 (100 V) 60 (200 V)	P.502
			1/15	8/123	100	120	441	0.98		
			1/20	2/41	75	90	539	1.27		
			1/25	8/205	60	72	588	1.67		
			1/30	4/123	50	60	686	1.96		
			1/40	1/41	37.5	45	784	2.65		
			1/50	4/205	30	36	882	3.33		
			1/60	20/1189	25	30	882	3.92		
			1/80	1/82	18.8	22.5	980	5.00		
			1/100	2/205	15	18	980	6.27		
			1/120	1/123	12.5	15	1080	7.45		
			1/160	1/164	9.4	11.2	1080	9.80		
			1/200	1/205	7.5	9	1080	12.7		
			1/240	5/1189	6.3	7.5	1080	14.7		
	25 W	15	1/10	4/41	150	180	343	1.08	50 (100 V) 45 (200 V)	P.502
			1/15	8/123	100	120	441	1.67		
			1/20	2/41	75	90	539	2.25		
			1/25	8/205	60	72	588	2.74		
			1/30	4/123	50	60	686	3.33		
			1/40	1/41	37.5	45	784	4.41		
			1/50	4/205	30	36	882	5.49		
			1/60	20/1189	25	30	882	6.66		
			1/80	1/82	18.8	22.5	980	8.43		
			1/100	2/205	15	18	980	10.8		
			1/120	1/123	12.5	15	1080	12.7		
			1/160	1/164	9.4	11.2	1080	16.7		
			1/200	1/205	7.5	9	1080	20.6		
			1/240	5/1189	6.3	7.5	1080	25.5		

Series	Motor Power	Frame Size	Reduction Ratio	Actual Reduction Ratio	Output Shaft Speed r/min 50 Hz	Output Shaft Speed r/min 60 Hz	Allowable Output Shaft O.H.L. N	Allowable Output Shaft Torque at High Speed N·m	Allowable Output Shaft Torque At 50 r/min (%)	Drawings
MINI	40 W	18	1/10	4/41	150	180	343	1.76	40 (100 V) (200 V)	P.503
			1/15	8/123	100	120	441	2.65		
			1/20	2/41	75	90	539	3.53		
			1/25	8/205	60	72	588	4.41		
			1/30	4/123	50	60	686	5.29		
			1/40	1/41	37.5	45	784	7.06		
			1/50	4/205	30	36	882	8.82		
			1/60	20/1189	25	30	882	10.8		
			1/80	1/82	18.8	22.5	980	13.7		
			1/100	2/205	15	18	980	16.7		
			1/120	1/123	12.5	15	1080	20.6		
			1/160	1/164	9.4	11.2	1370	26.5		
			1/200	1/205	7.5	9	1370	33.3		
			1/240	1/246	6.3	7.5	1370	40.2		
	60 W	18	1/10	4/41	150	180	343	2.74	60 (100 V) 55 (200 V)	P.503
			1/15	8/123	100	120	441	4.12		
			1/20	2/41	75	90	539	5.49		
			1/25	8/205	60	72	588	6.96		
			1/30	4/123	50	60	686	8.33		
			1/40	1/41	37.5	45	784	10.8		
			1/50	4/205	30	36	882	13.7		
			1/60	2/123	25	30	882	16.7		
			1/80	1/82	18.8	22.5	1270	20.6		
			1/100	2/205	15	18	1270	26.5		
			1/120	1/123	12.5	15	1370	31.4		
			1/160	1/164	9.4	11.2	1370	42.1		
			1/200	1/205	7.5	9	1370	52.9		
			* 1/240	1/246	6.3	7.5	1370	53.9		
	90 W	18	1/10	4/41	150	180	441	4.12	40	P.503
			1/15	8/123	100	120	588	6.17		
			1/20	2/41	75	90	735	8.33		
			1/25	8/205	60	72	882	10.8		
			1/30	4/123	50	60	980	12.7		
			1/40	1/41	37.5	45	1080	16.7		
			1/50	4/205	30	36	1180	20.6		
			1/60	2/123	25	30	1180	24.5		
			1/80	1/82	18.8	22.5	1270	31.4		
			1/100	2/205	15	18	1270	39.2		
			1/120	1/123	12.5	15	1370	47.0		
			* 1/160	1/164	9.4	11.2	1370	53.9		
			* 1/200	1/205	7.5	9	1370	53.9		
			* 1/240	1/246	6.3	7.5	1370	53.9		

3-4. Drawings

F2S Type Concentric Right Angle Hollow Bore | Shaft Diameter **12** | **Flange** Mounting

<Figure 1>

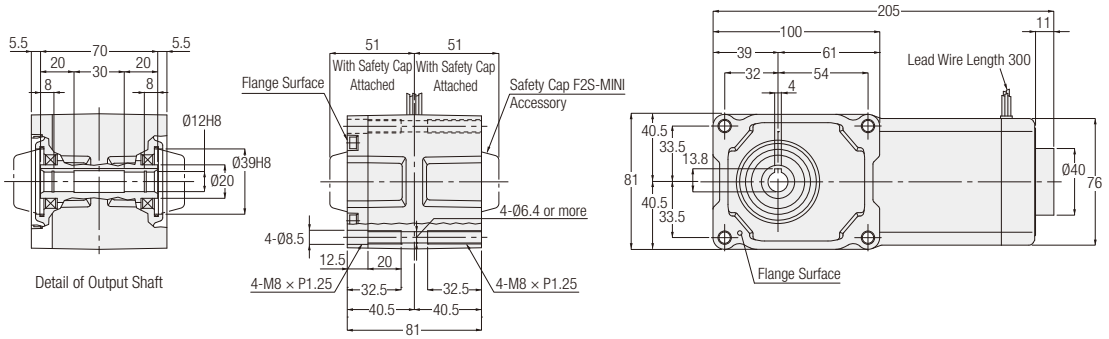

Number of Phases	Power	Part Number	Reduction Ratio	Figure Number	Controller	Approx. Weight (kg)
1-Phase	15 W	F2SU-12-✱✱✱-S15	10, 15, 20, 25, 30, 40, 50, 60, 80, 100, 120, 160, 200, 240	1	Sold as a set	3
		F2SU-12-✱✱✱-S15W				
		F2SP-12-✱✱✱-S15	10, 15, 20, 25, 30, 40, 50, 60, 80, 100, 120, 160, 200, 240	1	Sold Separately	3
		F2SP-12-✱✱✱-S15W				
	25 W	F2SU-12-✱✱✱-S25	10, 15, 20, 25, 30, 40, 50, 60, 80, 100, 120, 160, 200, 240	1	Sold as a set	3
		F2SU-12-✱✱✱-S25W				
		F2SP-12-✱✱✱-S25	10, 15, 20, 25, 30, 40, 50, 60, 80, 100, 120, 160, 200, 240	1	Sold Separately	3
		F2SP-12-✱✱✱-S25W				

Note: A reduction ratio will be indicated as ✱✱✱ in the nomenclature.
Note: Please refer to page 496 for the performance table.

F2S Type Concentric Right Angle Hollow Bore | Shaft Diameter 15 | **Flange** Mounting

<Figure 1>

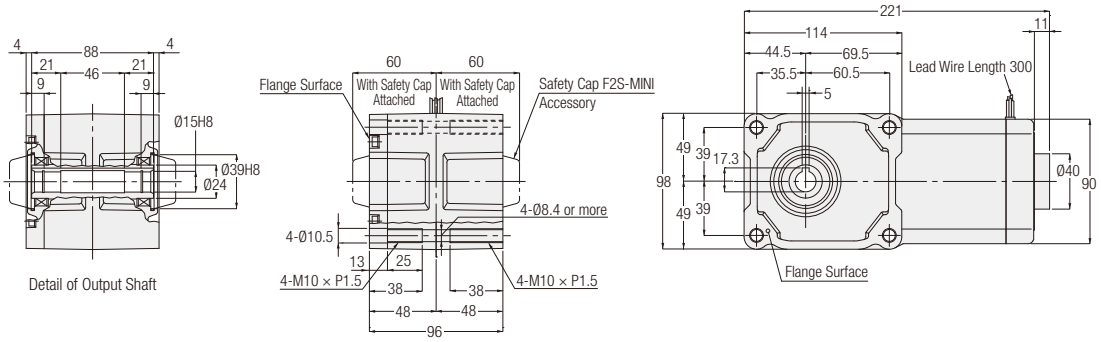

<Figure 2>

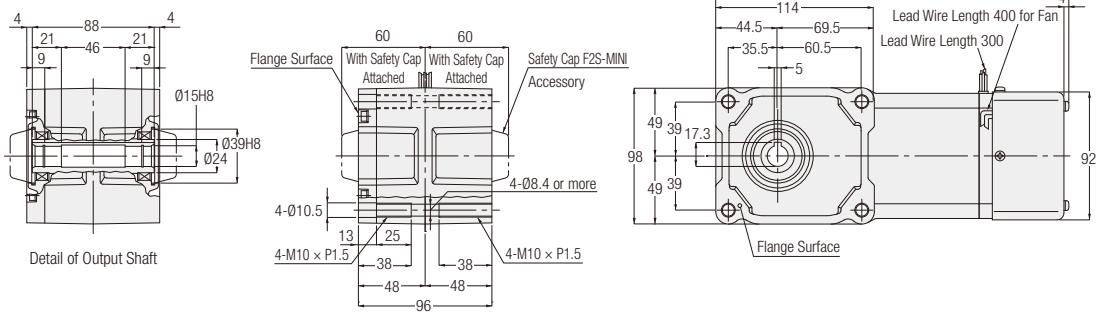

Number of Phases	Power	Part Number	Reduction Ratio	Figure Number	Controller	Approx. Weight (kg)
1-Phase	40 W	F2SU-15-✱✱✱-S40	10, 15, 20, 25, 30, 40, 50, 60, 80, 100, 120, 160, 200, 240	1	Sold as a set	4
		F2SU-15-✱✱✱-S40W				
		F2SP-15-✱✱✱-S40	10, 15, 20, 25, 30, 40, 50, 60, 80, 100, 120, 160, 200, 240	1	Sold Separately	4
		F2SP-15-✱✱✱-S40W				
	60 W	F2SU-15-✱✱✱-S60	10, 15, 20, 25, 30, 40, 50, 60, 80, 100, 120, 160, 200, 240	2	Sold as a set	4
		F2SU-15-✱✱✱-S60W				
		F2SP-15-✱✱✱-S60	10, 15, 20, 25, 30, 40, 50, 60, 80, 100, 120, 160, 200, 240	2	Sold Separately	4
		F2SP-15-✱✱✱-S60W				
	90 W	F2SU-15-✱✱✱-S90	10, 15, 20, 25, 30, 40, 50, 60, 80, 100, 120, 160, 200, 240	2	Sold as a set	4
		F2SU-15-✱✱✱-S90W				
		F2SP-15-✱✱✱-S90	10, 15, 20, 25, 30, 40, 50, 60, 80, 100, 120, 160, 200, 240	2	Sold Separately	4
		F2SP-15-✱✱✱-S90W				

Note: A reduction ratio will be indicated as ✱✱✱ in the nomenclature.
Note: Please refer to page 496 for the performance table.

F2F Type Concentric Right Angle Shaft | Shaft Diameter 15 | Flange Mounting

<Figure 1>

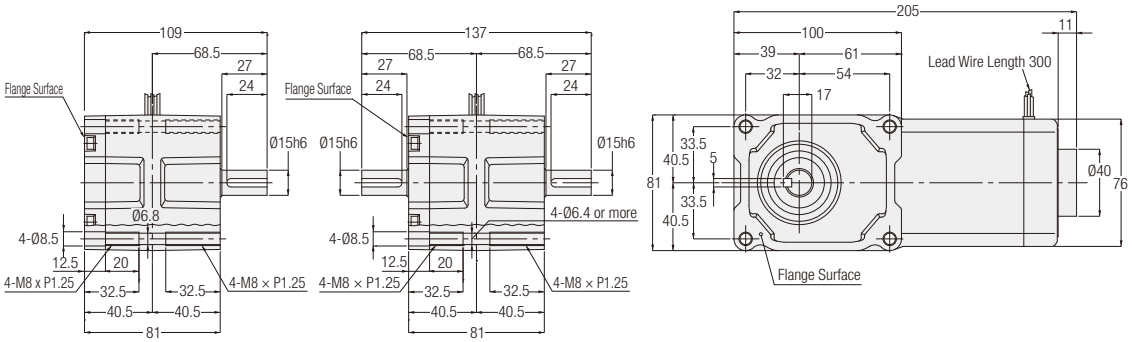

L Shaft T Shaft

Number of Phases	Power	Part Number	Reduction Ratio	Figure Number	Controller	Approx. Weight (kg)
1-Phase	15 W	F2FU-15#-***-S15	10, 15, 20, 25, 30, 40, 50, 60, 80, 100, 120, 160, 200, 240	1	Sold as a set	3
		F2FU-15#-***-S15W				
		F2FP-15#-***-S15	10, 15, 20, 25, 30, 40, 50, 60, 80, 100, 120, 160, 200, 240	1	Sold Separately	3
		F2FP-15#-***-S15W				
	25 W	F2FU-15#-***-S25	10, 15, 20, 25, 30, 40, 50, 60, 80, 100, 120, 160, 200, 240	1	Sold as a set	3
		F2FU-15#-***-S25W				
		F2FP-15#-***-S25	10, 15, 20, 25, 30, 40, 50, 60, 80, 100, 120, 160, 200, 240	1	Sold Separately	3
		F2FP-15#-***-S25W				

Note: A shaft arrangement (L, T) will be indicated as # in the nomenclature. In addition, a reduction ratio will be indicated as ***.
Note: Please refer to page 498 for the performance table.

F2F Type Concentric Right Angle Shaft | Shaft Diameter **18** | **Flange** Mounting

<Figure 1>

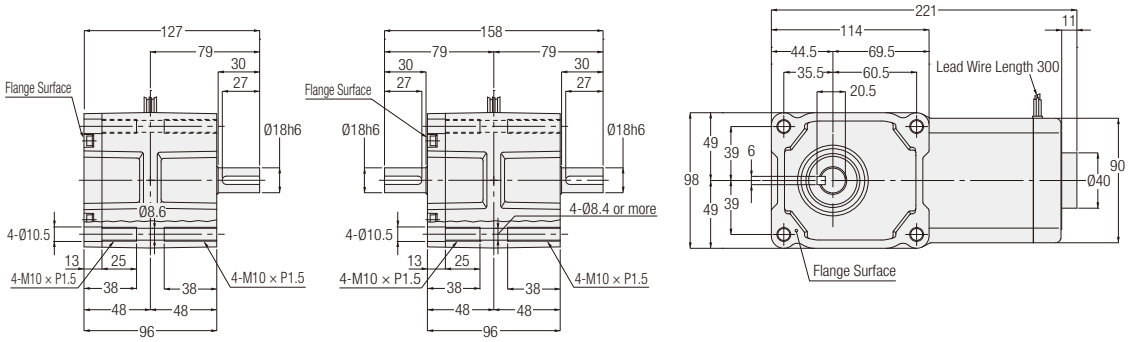

<Figure 2>

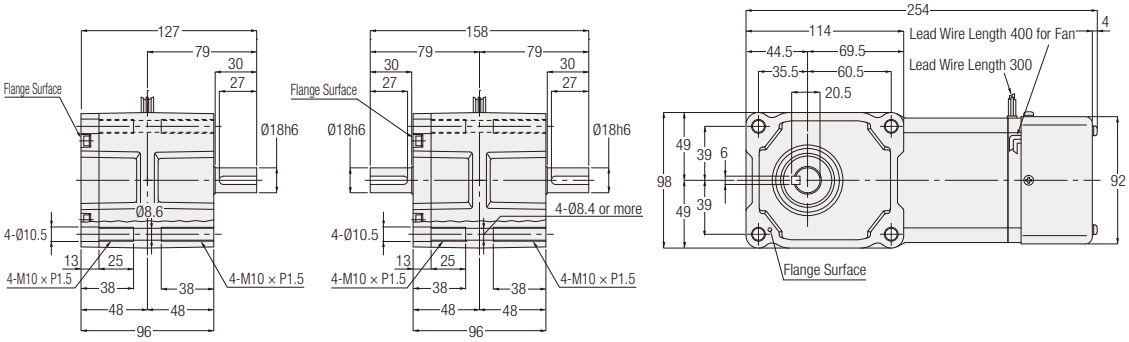

L Shaft T Shaft

Number of Phases	Power	Part Number	Reduction Ratio	Figure Number	Controller	Approx. Weight (kg)
1-Phase	40 W	F2FU-18#-***-S40	10, 15, 20, 25, 30, 40, 50, 60, 80, 100, 120, 160, 200, 240	1	Sold as a set	4
		F2FU-18#-***-S40W				
		F2FP-18#-***-S40	10, 15, 20, 25, 30, 40, 50, 60, 80, 100, 120, 160, 200, 240	1	Sold Separately	4
		F2FP-18#-***-S40W				
	60 W	F2FU-18#-***-S60	10, 15, 20, 25, 30, 40, 50, 60, 80, 100, 120, 160, 200, 240	2	Sold as a set	4
		F2FU-18#-***-S60W				
		F2FP-18#-***-S60	10, 15, 20, 25, 30, 40, 50, 60, 80, 100, 120, 160, 200, 240	2	Sold Separately	4
		F2FP-18#-***-S60W				
	90 W	F2FU-18#-***-S90	10, 15, 20, 25, 30, 40, 50, 60, 80, 100, 120, 160, 200, 240	2	Sold as a set	4
		F2FU-18#-***-S90W				
		F2FP-18#-***-S90	10, 15, 20, 25, 30, 40, 50, 60, 80, 100, 120, 160, 200, 240	2	Sold Separately	4
		F2FP-18#-***-S90W				

Note: A shaft arrangement (L, T) will be indicated as # in the nomenclature. In addition, a reduction ratio will be indicated as ***.
Note: Please refer to page 499 for the performance table.

4. Gearboxes (Double Shaft Type)

4-1. Performance Table

[Notes]
- The motor power class value is based on usage with a 4 poles motor.
- When using a motor other than a 4 poles motor, the value obtained by multiplying the torque by the torque correction coefficient shown on page 626 shall be the allowable output shaft torque at the rotation.
- Allowable output shaft O.H.L. is the value at 20 mm from the end of the output shaft.
- Please refer to "■ Rotational Direction Relationship (when viewed from the flange surface side)" for the rotational direction of the output shaft.
- The "*" mark indicates a limited torque type. Please make sure to check the allowable output shaft torque in the performance table.
- The key for the output shaft is not included.

■ Rotational Direction Relationship (when viewed from the flange surface side)

The rotational direction shown with arrow illustrates the rotation relationship between the output shaft and input shaft/ and is no way illustrating limitations in rotational direction.

Type	Power	Reduction Ratio
Concentric Right Angle Hollow Bore/F3S Type	0.1 kW to 2.2 kW	1/5 to 1/60

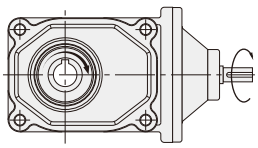

Type	Power	Reduction Ratio
Concentric Right Angle Hollow Bore/F3S Type	0.1 kW to 0.75 kW	1/80 to 1/240

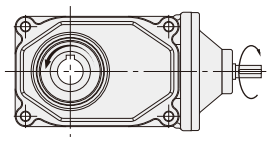

4 Poles Motor Power Class	Frame Size	Reduction Ratio	Actual Reduction Ratio	Allowable Output Shaft Torque Input (1500 r/min)	Allowable O.H.L. N		Allowable Output Shaft Thrust Load	Drawings
				N·m	Input Shaft	Output Shaft	N	
0.1 kW	20	1/5	1/5	2.5	196	980	244	P.506
		1/7.5	2/15	3.8		1080	270	
		1/10	1/10	5.2		1180	294	
		1/12.5	2/25	6.5		1270	316	
		1/15	1/15	7.7		1320	333	
		1/20	1/20	11		1470	373	
		1/25	1/25	13		1570	392	
		1/30	2/59	16		1670	422	
		1/40	1/40	21		1810	451	
		1/50	1/50	25		1860	471	
		1/60	1/59	31		1860	471	
	25	1/80	1/80	39	196	2550	637	P.506
		1/100	19/1880	49		2550	637	
		1/120	1/120	59		2550	637	
		1/160	1/160	78		2550	637	
		1/200	1/200	98		2550	637	
		* 1/240	1/240	101		2550	637	
0.2 kW	25	1/5	1/5	5.5	245	1230	307	P.506
		1/7.5	2/15	8.3		1370	342	
		1/10	1/10	11		1520	380	
		1/12.5	19/235	14		1620	405	
		1/15	1/15	17		1720	429	
		1/20	1/20	23		1860	466	
		1/25	1/25	27		2010	502	
		1/30	1/30	33		2110	527	
		1/40	1/40	44		2300	576	
		1/50	1/50	55		2450	613	
		1/60	1/60	67		2550	637	
	30	1/80	1/80	84	245	3090	775	P.507
		1/100	19/1880	105		3140	785	
		1/120	1/120	126		3140	785	
		1/160	1/160	169		3140	785	
		* 1/200	1/200	184		3140	785	
		* 1/240	1/240	184		3140	785	

4 Poles Motor Power Class	Frame Size	Reduction Ratio	Actual Reduction Ratio	Allowable Output Shaft Torque Input (1500 r/min)	Allowable O.H.L. N		Allowable Output Shaft Thrust Load	Drawings
				N·m	Input Shaft	Output Shaft	N	
0.4 kW	30	1/5	1/5	11	294	1520	375	P.507
		1/7.5	2/15	17		1760	438	
		1/10	1/10	23		1910	475	
		1/12.5	19/235	27		2060	506	
		1/15	1/15	33		2160	539	
		1/20	1/20	44		2400	600	
		1/25	1/25	55		2550	637	
		1/30	1/30	67		2650	662	
		1/40	1/40	88		2840	711	
		1/50	1/50	111		2990	747	
		1/60	1/60	133		3090	767	
	35	1/80	1/80	169	294	3480	873	P.508
		1/100	19/1880	211		3530	883	
		1/120	1/120	253		3530	883	
		* 1/160	1/160	270		3630	912	
		* 1/200	1/200	270		3630	912	
		* 1/240	1/240	270		3630	912	
0.75 kW	35	1/5	1/5	21	392	1960	500	P.508
		1/7.5	2/15	31		2250	567	
		1/10	1/10	41		2450	613	
		1/12.5	19/235	52		2600	669	
		1/15	1/15	63		2740	686	
		1/20	1/20	83		2990	747	
		1/25	1/25	104		3190	796	
		1/30	1/30	124		3280	821	
		1/40	1/40	166		3480	870	
		1/50	1/50	208		3480	870	
		1/60	1/60	249		3480	870	
	45	1/80	1/80	316	392	4750	1177	P.509
		1/100	19/1880	395		4750	1177	
		1/120	1/120	473		4750	1177	
		* 1/160	1/160	554		5190	1275	
		* 1/200	1/200	554		5190	1275	
		* 1/240	1/240	554		5190	1275	
1.5 kW	45	1/5	1/5	41	392	2940	800	P.509
		1/7.5	2/15	63		3330	900	
		1/10	1/10	83		3630	967	
		1/12.5	19/235	104		3920	1040	
		1/15	1/15	124		4070	1067	
		1/20	1/20	166		4460	1067	
		1/25	1/25	208		4700	1067	
		1/30	1/30	249		4750	1067	
		1/40	1/40	332		4750	1067	
		1/50	1/50	416		4750	1067	
		1/60	1/60	498		4750	1067	
2.2 kW	45	1/5	1/5	61	392	3140	800	P.509
		1/7.5	2/15	91		3530	900	
		1/10	1/10	122		3920	967	
		1/12.5	19/235	152		4120	1040	
		1/15	1/15	182		4410	1067	
		1/20	1/20	244		4750	1067	
		1/25	1/25	305		4750	1067	
		1/30	1/30	366		4750	1067	

4-2. Drawings

F3S Type Concentric Right Angle Hollow Bore — Shaft Diameter 20 — Flange Mounting

<Figure 1>

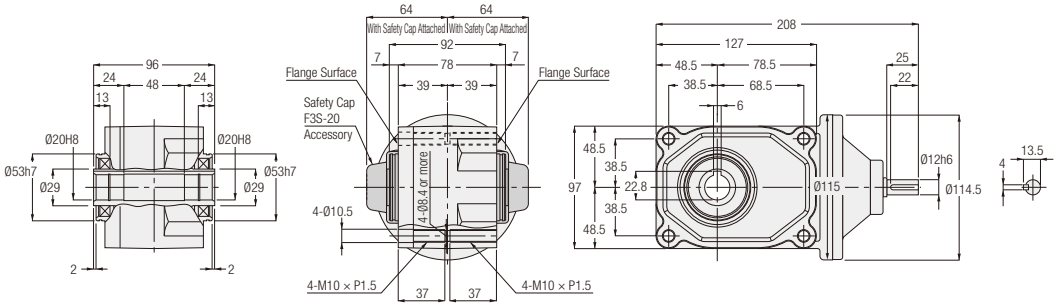

Motor Power Class	Part Number	Reduction Ratio	Figure Number	Approx. Weight (kg)
0.1 kW	F3S-20-✱✱✱-010	5, 7.5, 10, 12.5, 20, 25, 30, 40, 50, 60	1	3.5

Note: A reduction ratio will be indicated as ✱✱✱ in the nomenclature.
Note: Please refer to page 504 for the performance table.

F3S Type Concentric Right Angle Hollow Bore — Shaft Diameter 25 — Flange Mounting

<Figure 2>

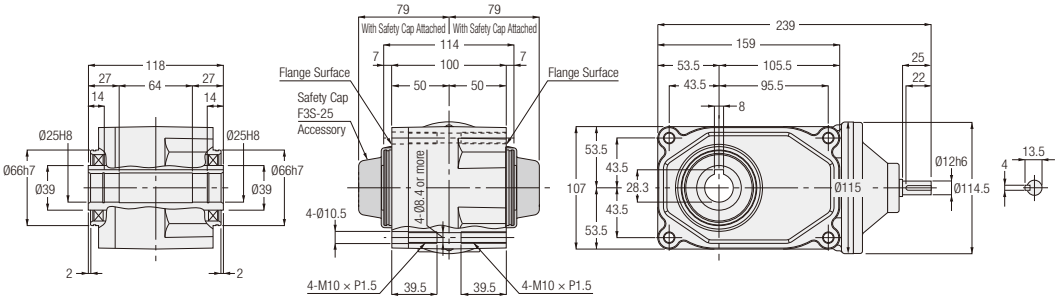

<Figure 3>

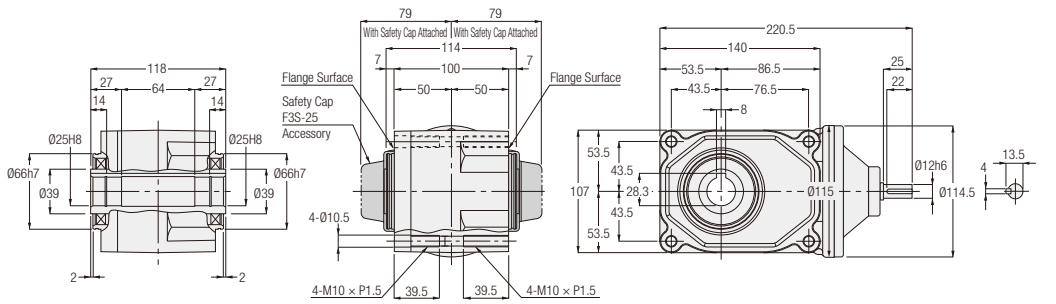

Motor Power Class	Part Number	Reduction Ratio	Figure Number	Approx. Weight (kg)
0.1 kW	F3S-25-✱✱✱-010	80, 100, 120, 160, 200, 240	2	5
0.2 kW	F3S-25-✱✱✱-020	5, 7.5, 10, 12.5, 20, 25, 30, 40, 50, 60	3	5

Note: A reduction ratio will be indicated as ✱✱✱ in the nomenclature.
Note: Please refer to page 504 for the performance table.

F3S Type Concentric Right Angle Hollow Bore | Shaft Diameter 30 | **Flange** Mounting

<Figure 1>

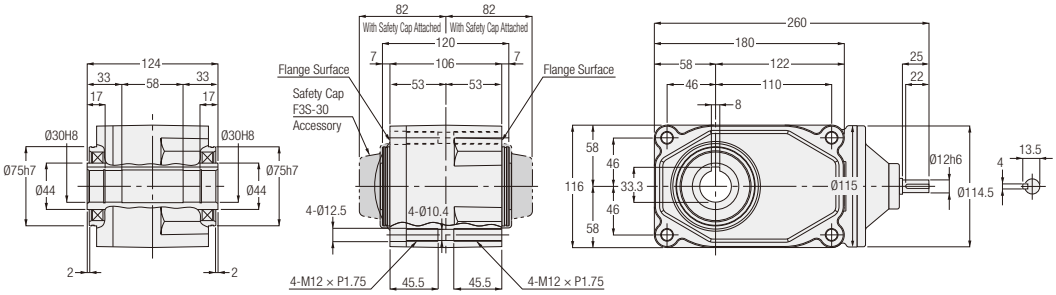

<Figure 2>

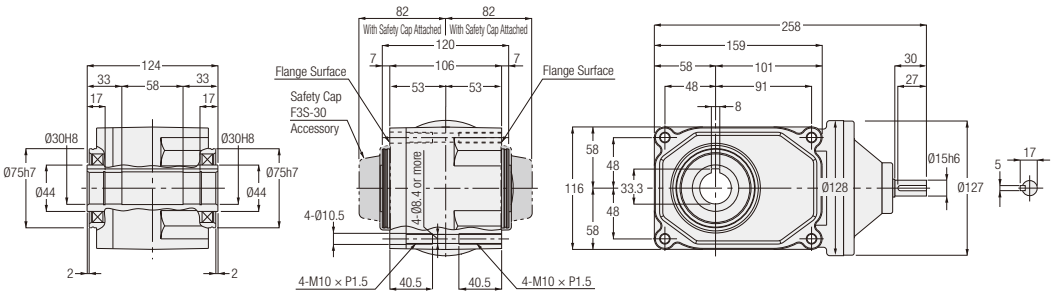

Motor Power Class	Part Number	Reduction Ratio	Figure Number	Approx. Weight (kg)
0.2 kW	F3S-30-***-020	80, 100, 120, 160, 200, 240	1	6.5
0.4 kW	F3S-30-***-040	5, 7.5, 10, 12.5, 20, 25, 30, 40, 50, 60	2	6.5

Note: A reduction ratio will be indicated as *** in the nomenclature.
Note: Please refer to page 504 for the performance table.

F3S Type Concentric Right Angle Hollow Bore | Shaft Diameter 35 | Flange Mounting

<Figure 1>

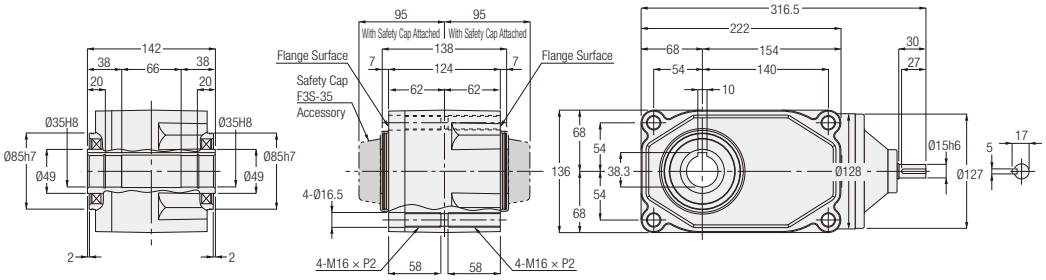

<Figure 2>

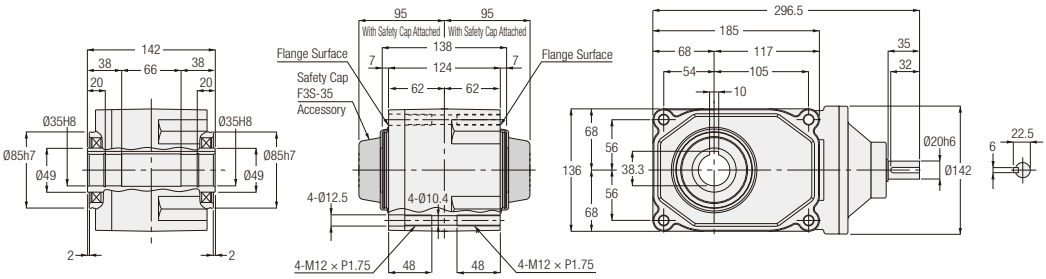

Motor Power Class	Part Number	Reduction Ratio	Figure Number	Approx. Weight (kg)
0.4 kW	F3S-35-✱✱✱-040	80, 100, 120, 160, 200, 240	1	9
0.75 kW	F3S-35-✱✱✱-075	5, 7.5, 10, 12.5, 20, 25, 30, 40, 50, 60	2	9

Note: A reduction ratio will be indicated as ✱✱✱ in the nomenclature.
Note: Please refer to page 505 for the performance table.

F3S Type Concentric Right Angle Hollow Bore | Shaft Diameter 45 | **Flange** Mounting

<Figure 1>

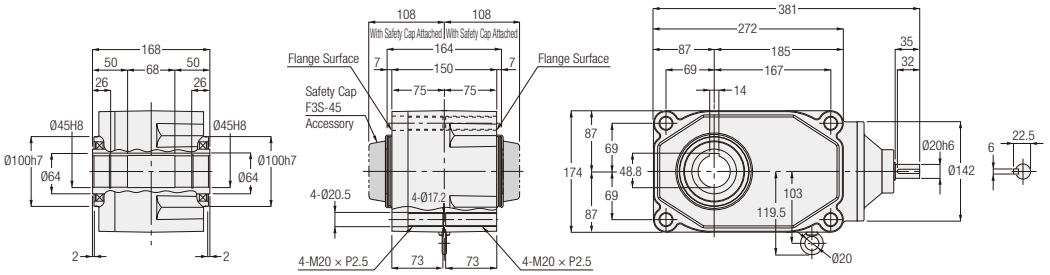

<Figure 2>

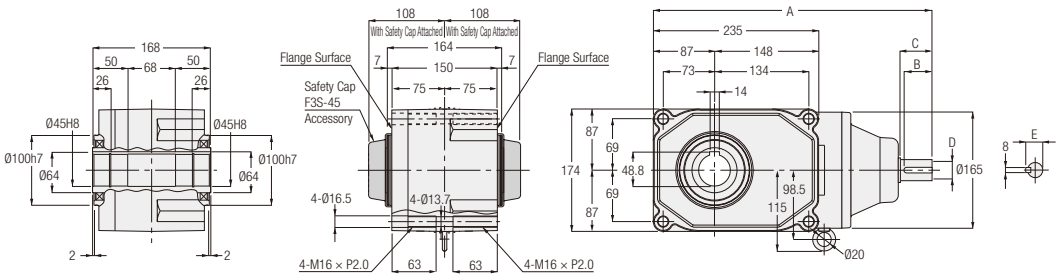

Power Class	Part Number	Reduction Ratio	Figure Number	Approx. Weight (kg)	A	B	C	D	E
0.75 kW	F3S-45-✱✱✱-075	80, 100, 120, 160, 200, 240	1	18	-	-	-	-	-
1.5 kW	F3S-45-✱✱✱-150	5, 7.5, 10, 12.5, 20, 25, 30, 40, 50, 60	2	18	384.5	35	40	Ø25h6	28
2.2 kW	F3S-45-✱✱✱-220	5, 7.5, 10, 12.5, 15, 50, 25, 30	2	18	396.5	40	45	Ø30h6	33

Note: A reduction ratio will be indicated as ✱✱✱ in the nomenclature.
Note: Please refer to page 505 for the performance table.

5. S-Type Gearboxes (Type Which Can Be Equipped with Designated Motor)

5-1. Performance Table

[Notes]
- The value of the allowable output shaft torque is the value when a 4 poles motor is used.
- When using a motor other than a 4 poles motor, the value obtained by multiplying the torque by the torque correction coefficient shown on page 626 shall be the allowable output shaft torque at the rotation.
- The key for the output shaft is not included.
- Allowable output shaft O.H.L. is the value at 20 mm from the end of the output shaft.
- Please refer to "■ Rotational Direction Relationship (when viewed from the flange surface side)" for the rotational direction of the output shaft.
- The "*" mark indicates a limited torque type. Please make sure to check the allowable output shaft torque in the performance table.

■ Rotational Direction Relationship (when viewed from the flange surface side)

The rotational direction shown with arrow illustrates the rotation relationship between the output shaft and input shaft/ and is no way illustrating limitations in rotational direction.

Type	Power	Reduction Ratio
Concentric Right Angle Hollow Bore/F3S Type	0.1 kW to 2.2 kW	1/5 to 1/60

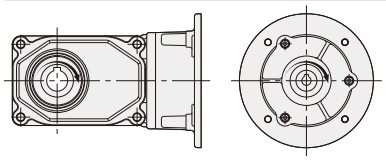

Type	Power	Reduction Ratio
Concentric Right Angle Hollow Bore/F3S Type	0.1 kW to 0.75 kW	1/80 to 1/240

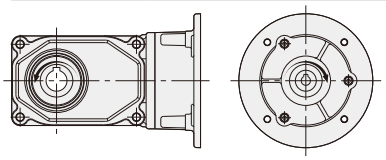

4 Poles Motor Power Class	Frame Size	Reduction Ratio	Actual Reduction Ratio	Allowable Output Shaft Torque N·m 50 Hz	Allowable Output Shaft Torque N·m 60 Hz	Allowable Output Shaft O.H.L. N	Allowable Output Shaft Thrust Load N	Drawings
0.1 kW	20	1/5	1/5	2.5	2.2	980	244	P.512
		1/7.5	2/15	3.8	3.2	1080	270	
		1/10	1/10	5.2	4.3	1180	294	
		1/12.5	2/25	6.5	5.4	1270	316	
		1/15	1/15	7.7	6.5	1320	333	
		1/20	1/20	11	8.6	1470	373	
		1/25	1/25	13	11	1570	392	
		1/30	2/59	16	13	1670	422	
		1/40	1/40	21	18	1810	451	
		1/50	1/50	25	22	1860	471	
		1/60	1/59	31	25	1860	471	
	25	1/80	1/80	39	32	2550	637	P.512
		1/100	19/1880	49	41	2550	637	
		1/120	1/120	59	49	2550	637	
		1/160	1/160	78	66	2550	637	
		1/200	1/200	98	81	2550	637	
		* 1/240	1/240	101	98	2550	637	
0.2 kW	25	1/5	1/5	5.5	4.6	1230	307	P.512
		1/7.5	2/15	8.3	7	1370	342	
		1/10	1/10	11	9.2	1520	380	
		1/12.5	19/235	14	12	1620	405	
		1/15	1/15	17	14	1720	429	
		1/20	1/20	23	19	1860	466	
		1/25	1/25	27	24	2010	502	
		1/30	1/30	33	27	2110	527	
		1/40	1/40	44	37	2300	576	
		1/50	1/50	55	46	2450	613	
		1/60	1/60	67	55	2550	637	
	30	1/80	1/80	84	71	3090	775	P.513
		1/100	19/1880	105	87	3140	785	
		1/120	1/120	126	105	3140	785	
		1/160	1/160	169	140	3140	785	
		* 1/200	1/200	184	175	3140	785	
		* 1/240	1/240	184	184	3140	785	

4 Poles Motor Power Class	Frame Size	Reduction Ratio	Actual Reduction Ratio	Allowable Output Shaft Torque N·m		Allowable Output Shaft O.H.L.	Allowable Output Shaft Thrust Load	Drawings
				50 Hz	60 Hz	N	N	
0.4 kW	30	1/5	1/5	11	9.2	1520	375	P.513
		1/7.5	2/15	17	14	1760	438	
		1/10	1/10	23	19	1910	475	
		1/12.5	19/235	27	24	2060	506	
		1/15	1/15	33	27	2160	539	
		1/20	1/20	44	37	2400	600	
		1/25	1/25	55	46	2550	637	
		1/30	1/30	67	55	2650	662	
		1/40	1/40	88	74	2840	711	
		1/50	1/50	111	92	2990	747	
		1/60	1/60	133	111	3090	767	
	35	1/80	1/80	169	140	3480	873	P.514
		1/100	19/1880	211	175	3530	883	
		1/120	1/120	253	211	3530	883	
		* 1/160	1/160	270	270	3630	912	
		* 1/200	1/200	270	270	3630	912	
		* 1/240	1/240	270	270	3630	912	
0.75 kW	35	1/5	1/5	21	18	1960	500	P.514
		1/7.5	2/15	31	25	2250	567	
		1/10	1/10	41	34	2450	613	
		1/12.5	19/235	52	43	2600	669	
		1/15	1/15	63	52	2740	686	
		1/20	1/20	83	70	2990	747	
		1/25	1/25	104	86	3190	796	
		1/30	1/30	124	104	3280	821	
		1/40	1/40	166	138	3480	870	
		1/50	1/50	208	173	3480	870	
		1/60	1/60	249	208	3480	870	
	45	1/80	1/80	316	263	4750	1177	P.515
		1/100	19/1880	395	328	4750	1177	
		1/120	1/120	473	395	4750	1177	
		* 1/160	1/160	554	526	5190	1275	
		* 1/200	1/200	554	554	5190	1275	
		* 1/240	1/240	554	554	5190	1275	
1.5 kW	45	1/5	1/5	41	34	2940	800	P.515
		1/7.5	2/15	63	52	3330	900	
		1/10	1/10	83	70	3630	967	
		1/12.5	19/235	104	86	3920	1040	
		1/15	1/15	124	104	4070	1067	
		1/20	1/20	166	138	4460	1067	
		1/25	1/25	208	173	4700	1067	
		1/30	1/30	249	208	4750	1067	
		1/40	1/40	332	276	4750	1067	
		1/50	1/50	416	345	4750	1067	
		1/60	1/60	498	416	4750	1067	
2.2 kW	45	1/5	1/5	61	51	3140	800	P.515
		1/7.5	2/15	91	76	3530	900	
		1/10	1/10	122	102	3920	967	
		1/12.5	19/235	152	126	4120	1040	
		1/15	1/15	182	152	4410	1067	
		1/20	1/20	244	203	4750	1067	
		1/25	1/25	305	254	4750	1067	
		1/30	1/30	366	305	4750	1067	

5-2. Drawings

F3S Type Concentric Right Angle Hollow Bore — Shaft Diameter 20 — Flange Mounting

<Figure 1>

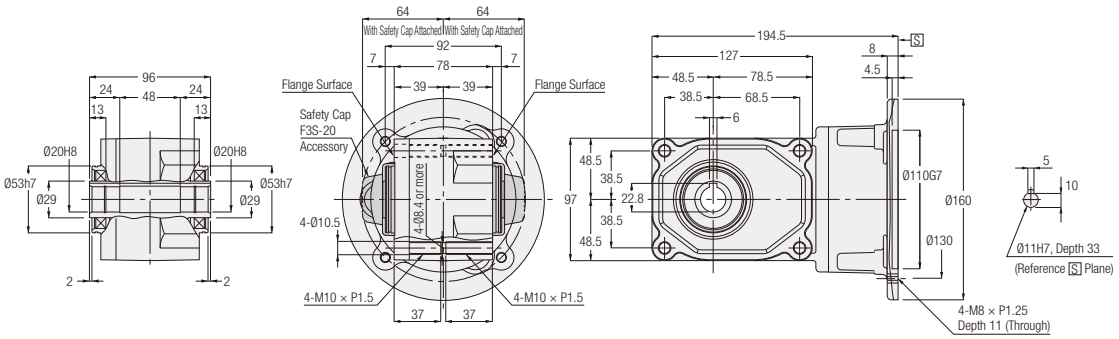

Motor Power Class	Part Number	Reduction Ratio	Figure Number	Approx. Weight (kg)
0.1 kW	F3SS-20-✱✱✱-010	5, 7.5, 10, 12.5, 20, 25, 30, 40, 50, 60	1	4

Note: A reduction ratio will be indicated as ✱✱✱ in the nomenclature.
Note: Please refer to page 510 for the performance table.
Note: Please refer to page 630 for the details of the motor mounting area.

F3S Type Concentric Right Angle Hollow Bore — Shaft Diameter 25 — Flange Mounting

<Figure 2>

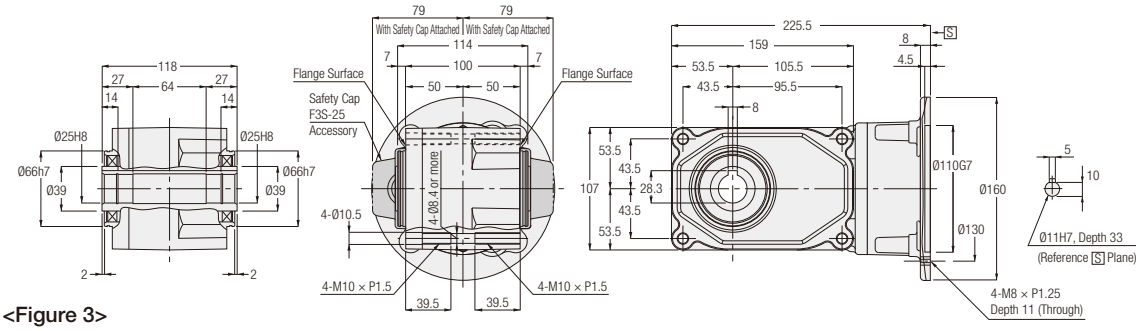

<Figure 3>

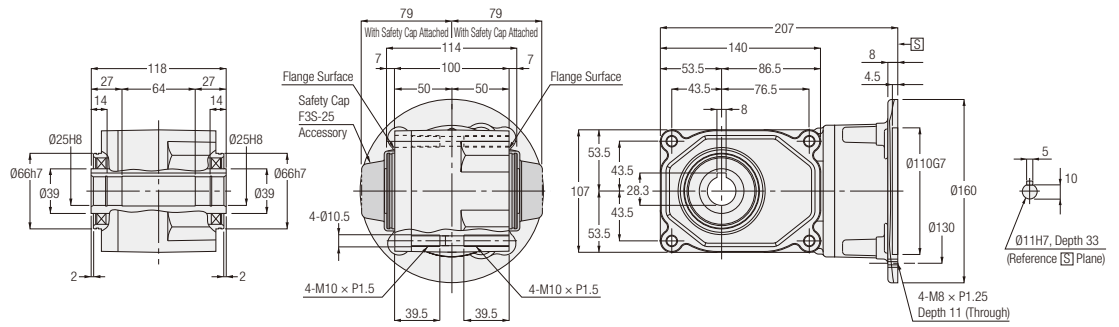

Motor Power Class	Part Number	Reduction Ratio	Figure Number	Approx. Weight (kg)
0.1 kW	F3SS-25-✱✱✱-010	80, 100, 120, 160, 200, 240	2	5.5
0.2 kW	F3SS-25-✱✱✱-020	5, 7.5, 10, 12.5, 20, 25, 30, 40, 50, 60	3	5.5

Note: A reduction ratio will be indicated as ✱✱✱ in the nomenclature.
Note: Please refer to page 510 for the performance table.
Note: Please refer to page 630 for the details of the motor mounting area.

F3S Type Concentric Right Angle Hollow Bore | Shaft Diameter 30 | **Flange** Mounting

<Figure 1>

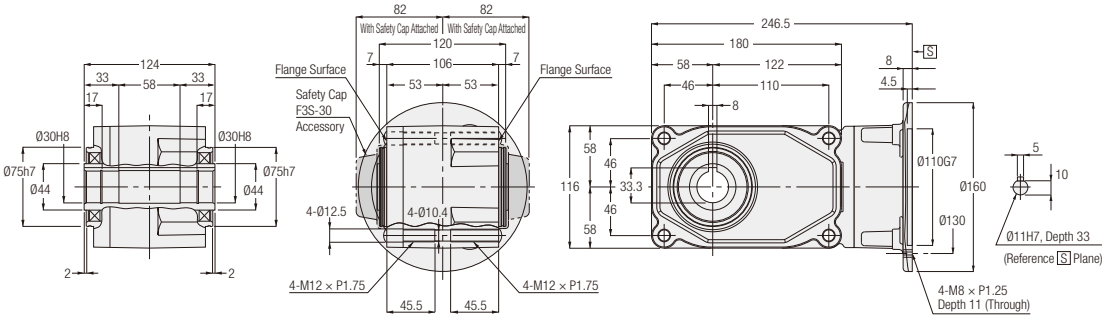

<Figure 2>

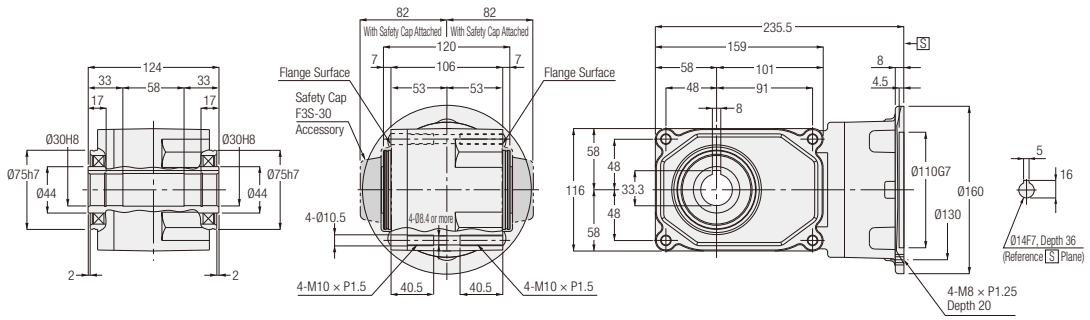

Motor Power Class	Part Number	Reduction Ratio	Figure Number	Approx. Weight (kg)
0.2 kW	F3SS-30-✱✱✱-020	80, 100, 120, 160, 200, 240	1	7
0.4 kW	F3SS-30-✱✱✱-040	5, 7.5, 10, 12.5, 15, 20, 25, 30, 40, 50, 60	2	7

Note: A reduction ratio will be indicated as ✱✱✱ in the nomenclature.
Note: Please refer to page 510 for the performance table.
Note: Please refer to page 630 for the details of the motor mounting area.

F3S Type Concentric Right Angle Hollow Bore | Shaft Diameter 35 | Flange Mounting

<Figure 1>

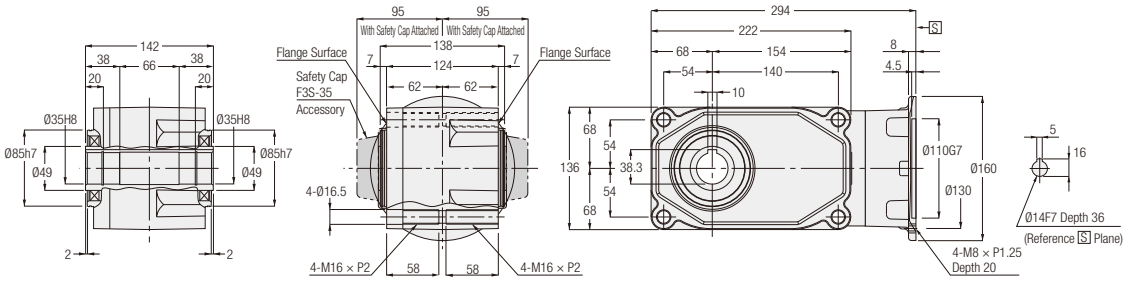

<Figure 2>

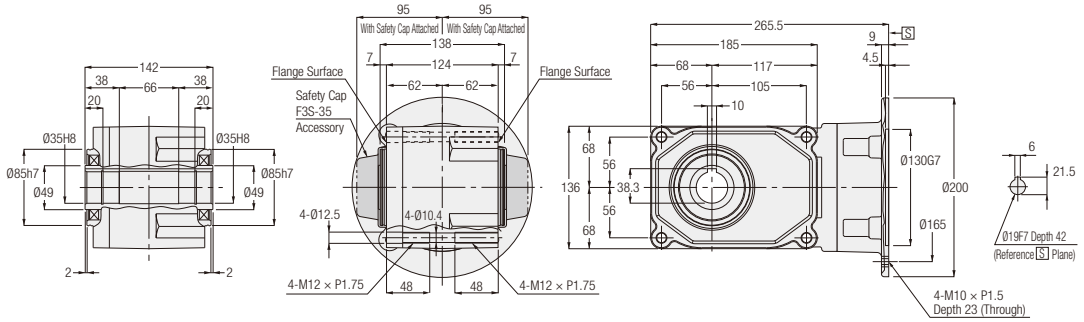

Motor Power Class	Part Number	Reduction Ratio	Figure Number	Approx. Weight (kg)
0.4 kW	F3SS-35-✱✱✱-040	80, 100, 120, 160, 200, 240	1	10.5
0.75 kW	F3SS-35-✱✱✱-075	5, 7.5, 10, 12.5, 15, 20, 25, 30, 40, 50, 60	2	10.5

Note: A reduction ratio will be indicated as ✱✱✱ in the nomenclature.
Note: Please refer to page 511 for the performance table.
Note: Please refer to page 630 for the details of the motor mounting area.

F3S Type Concentric Right Angle Hollow Bore | Shaft Diameter 45 | **Flange** Mounting

<Figure 1>

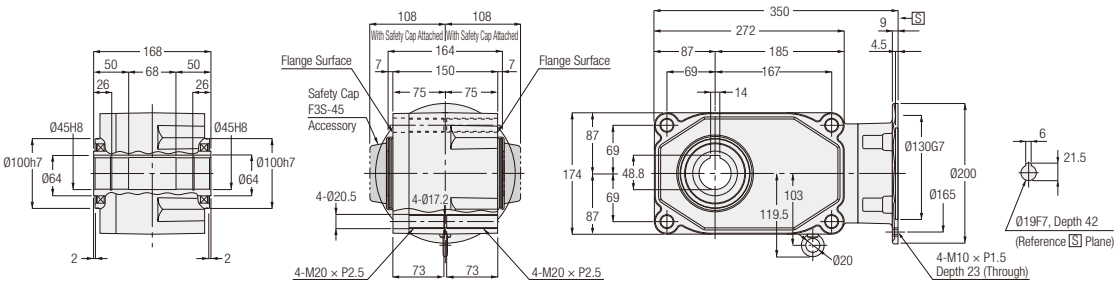

<Figure 2>

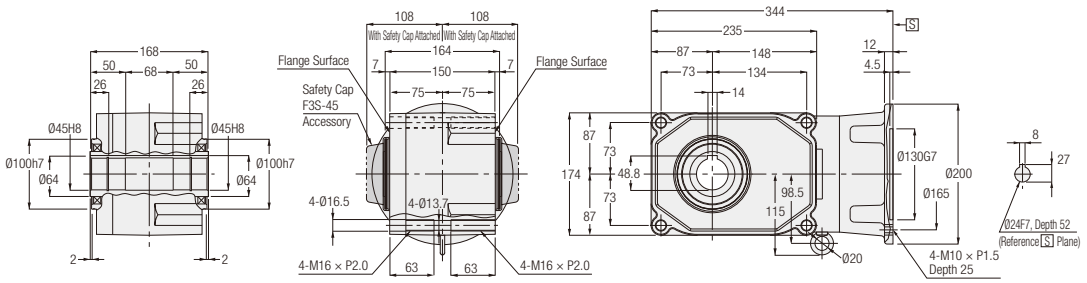

<Figure 3>

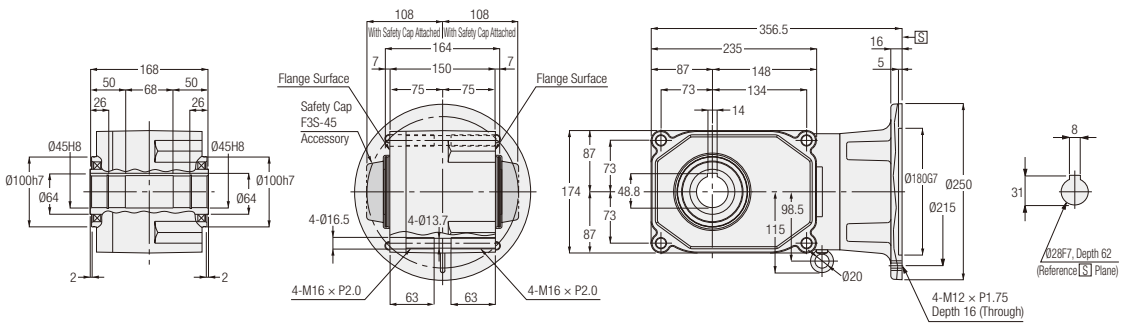

Motor Power Class	Part Number	Reduction Ratio	Figure Number	Approx. Weight (kg)
0.75 kW	F3SS-45-✱✱✱-075	80, 100, 120, 160, 200, 240	1	17.5
1.5 kW	F3SS-45-✱✱✱-150	5, 7.5, 10, 12.5, 15, 20, 25, 30, 40, 50, 60	2	17.5
2.2 kW	F3SS-45-✱✱✱-220	5, 7.5, 10, 12.5, 15, 50, 25, 30	3	17.5

Note: A reduction ratio will be indicated as ✱✱✱ in the nomenclature.
Note: Please refer to page 511 for the performance table.
Note: Please refer to page 630 for the details of the motor mounting area.

MEMO

Technical Documentation

INDUCTION GEARMOTORS

P.518 Selection Process Steps and Examples
P.524 Service Factor (Sf)
P.525 Allowable Moment of Inertia J
P.526 Method for Calculating Moment of Inertia J
P.527 Overhung Load (O.H.L.)
P.530 Material for Calculating Gearmotors with Brake and Gearmotors with Clutch/Brake
P.531 Moment of Inertia of the Gearmotors
P.533 Structural Diagram
P.538 Specifications and Structure of Gearmotors with Brake
P.545 Specifications of Gearmotors with Simple Brake/Motor Lead Wires
P.546 Wiring Diagram of Gearmotors
P.549 Wiring Diagram of Gearmotors with Brake
P.557 Wiring Diagram of Gearmotors with Clutch/Brake
P.558 Wiring Diagram of Built-in Rectifier of Gearmotors with Brake
P.564 Wiring Diagram of IP65 Gearmotors with Brake
P.569 Braking Delay Time: ta
P.570 Terminal Box
P.575 Terminal Box Dimensions and Positions
P.581 Positional Change of the Terminal Box
P.588 Dimensions Required for Removing the Fan Cover and the Brake Cover
P.589 Rectifier and Surge Suppressor of Gearmotors with Brake
P.590 Manual Brake Release Lever (optional)
P.591 Combination of Gearmotors and Inverter/VFD
P.593 Global Standards Conformance
P.626 Gearboxes (Double Shaft Type)
P.627 S-Type Gearboxes
P.628 Detailed Dimensions of Double Shaft Type/S-Type Gearboxes Input Shaft
P.631 Speed Control Gearmotors
P.642 Precautions for Use

Selection Process Steps and Examples

MINI Series

Selection Examples In the case of shaft mount

Application ..... Conveyor (light shock load)
Conveyor speed ..... 10 m/min
Carrying weight ..... 50 kg
Connection method ..... Chain
Operation time ..... 12 hours/day
Number of startups and stops ... 720 times/day
Power source frequency ..... 60 Hz region
Friction coefficient ..... 0.2 (estimated)

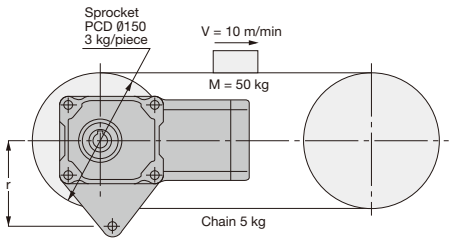

Please utilize the calculation and selection tool on our website.
(https://sentei.nissei-gtr.co.jp/english/calculation)
You may calculate the necessary power by inputting the usage conditions and the series on our website.

Conditions other than those shown in the selection process steps shall not be included in this calculation.

Selection Process Steps		Selection Examples
①Determining the reduction ratio	Determining the reduction ratio (i) $i = \frac{\text{Required Speed of Output Shaft}}{\text{1600 (estimated)}}$	Required Speed of Conveyor Shaft = $\frac{10 \times 1000}{150 \times \pi} \approx 21.2$ r/min Since the speed of the conveyor shaft and that of the gearbox output shaft are the same: $i = \frac{21.2}{1600} \approx \frac{1}{75}$ $i = \frac{1}{80}$ (Note: The speed of the motor varies between the synchronous speed and the rated speed, depending on the level of the load.)
②Calculating the torque	Calculating the actual load torque (T_L)	$T_L = 9.8 \times (50 + 3 \times 2 + 5) \times 0.2 \times \frac{150}{2 \times 1000} = 9.0$ N·m
	With use of the service factor (Sf) in [Table-1] on page 500, calculating the equivalent output torque (T_{LE})	Using the service factor (Sf), adjust the actual load torque (T_L).
	$T_{LE} = T_L \times Sf$	$T_{LE} = 9.0 \times 1.25 \approx 11.25$ N·m
③Calculating the inertia	Calculating the actual inertial load	Calculating the actual load's moment of inertia (J_L) $J_L = \{50 \times (\frac{0.15}{2})^2\} + \{\frac{1}{2} \times 3 \times (\frac{0.15}{2})^2 \times 2\} + \{5 \times (\frac{0.15}{2})^2\}$ $= 0.33$ kg·m^2
	Calculating the inertial load on the motor shaft	Converting J_L into the motor shaft equivalent (J_ℓ) $J_\ell = J_L \times (i)^2$ $J_\ell = 0.33 \times (\frac{1}{80})^2$ ≈ 0.000052 kg·m^2
	Calculating the equivalent inertia by correction based on operation conditions	Correction coefficient = 3 based on operation conditions
		Calculating the equivalent moment of inertia J ($J_{\ell E}$) $J_{\ell E} = J_\ell \times$ (Correction Coefficient) [Table-3] on page 525 $J_{\ell E} = 0.000052 \times 3 = 0.000156$ kg·m^2
④Determining a type	Determining a right angle hollow bore, right angle shaft, or parallel shaft	Decide on the MINI series F2 type F2S (right angle hollow bore) for mounting on the shaft.

Select a model that meets the values calculated based on selection steps ① to ④ for each category.

	Category	
Calculation Result	Reduction Ratio	1/80
	Torque Calculation From the Performance Table, select a model with $T_{LE} \leq$ allowable output shaft torque (T_A).	11.25 N·m
		Select the model F2SM-12-80-T40, which meets the torque ($T_{LE} \leq T_A$).
	Inertia Calculation Based on [Table-1] on page 525, select a model that meets the condition of equivalent inertia ≤ allowable inertia.	0.000156 kg·m^2 Select a model that meets $J_{\ell E} \leq$ allowable moment of inertia J:
		Select the model F2SM-15-80-T60, which meets the inertia.
Overall Verdict	Select a model that meets all conditions based on the torque and the inertia.	**Decide on F2SM-15-80-T60.** For the torque arm, option part number TAF2S-15 is recommended. Refer to page 1006. If the customer wishes to produce their own torque arm, the distance r from the center of the output shaft to the detent is $r \geq \frac{\text{Actual load torque} \times 1000}{\text{Allowable O.H.L.–Product Weight}} = \frac{11.25 \times 1000}{1274 - 9.8 \times 4} = 9.1$ Design it to 9.1 mm or more. * Refer to page 1003 for the equation for calculating the torque arm.

Selection Examples Gearmotors (with Motor)

Application ..... Conveyor (light shock load)
Conveyor speed ..... 10 m/min
Carrying weight ..... 40 kg
Connection method ..... Chain (located in the center of the shaft)
Operation time ..... 12 hours/day
Number of startups and stops ... 720 times/day
Power source frequency ..... 60 Hz region
Friction coefficient ..... 0.2 (estimated)

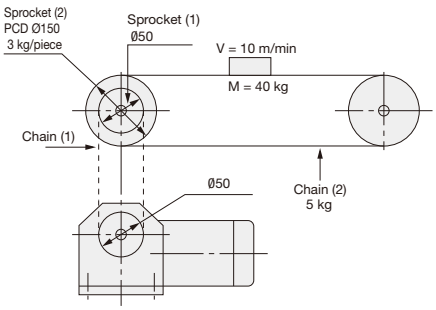

The chain (1), the sprocket (1), and other conditions shall not be included in this calculation.

Please utilize the calculation and selection tool on our website.
(https://sentei.nissei-gtr.co.jp/english/calculation)
You may calculate the necessary power by inputting the usage conditions and the series on our website.

Selection Process Steps		Selection Examples
①Determining the reduction ratio	Determining the reduction ratio (i) $i = \frac{\text{Required Speed of Output Shaft}}{\text{1600 (estimated)}}$	Required Speed of Conveyor Shaft = $\frac{10 \times 1000}{150 \times \pi} \approx 21.2$ r/min Since the diameter of the sprocket for the conveyor shaft and that of the gearbox output shaft are the same: $i = \frac{21.2}{1600} \approx \frac{1}{75}$ $i = \frac{1}{80}$ (Note: The speed of the motor varies between the synchronous speed and the rated speed, depending on the level of the load.)
②Calculating the torque	Calculating the actual load torque (T_L)	$T_L = 9.8 \times (40 + 3 \times 2 + 5) \times 0.2 \times \frac{150}{2 \times 1000} = 7.5$ N·m
	With use of the service factor (Sf) in [Table 1] on page 500, calculating the equivalent output torque (T_{LE})	Using the service factor (Sf), adjust the actual load torque (T_L).
	$T_{LE} = T_L \times Sf$	$T_{LE} = 7.5 \times 1.25 \approx 9.4$ N·m
③Calculating the inertia	Calculating the actual inertial load	Calculating the actual load's moment of inertia (J_L) $J_L = \{40 \times (\frac{0.15}{2})^2\} + \{\frac{1}{2} \times 3 \times (\frac{0.15}{2})^2 \times 2\} + \{5 \times (\frac{0.15}{2})^2\}$ $= 0.27$ kg·m^2
	Calculating the inertial load on the motor shaft	Converting J_L into the motor shaft equivalent (J_ℓ) $J_\ell = J_L \times (i)^2$ $J_\ell = 0.27 \times (\frac{1}{80})^2$ ≈ 0.000042 kg·m^2
	Calculating the equivalent inertia by correction based on operation conditions	Correction coefficient = 3 based on operation conditions
		Calculating the equivalent moment of inertia J ($J_{\ell E}$) $J_{\ell E} = J_\ell \times$ (Correction Coefficient) [Table-3] on page 525 $J_{\ell E} = 0.000042 \times 3 = 0.000126$ kg·m^2
	Based on [Table-1] on page 525, select a model that meets the condition of equivalent inertia ≤ allowable inertia.	Select a model that meets $J_{\ell E} \leq$ allowable moment of inertia J: HLM-18$\frac{L}{R}_{T}$-80-T60
④Verifying the O.H.L.	Determining the Coefficient K_1 based on [Table-1] on page 527 Determining the Coefficient K_2 based on [Table-2] on page 527	$K_1 = 1$ $K_2 = 1$
	O.H.L. = $\frac{T_{LE} \times K_1 \times K_2}{R}$ * R: Pitch circle radius of the sprocket etc. to be attached to the gearbox shaft	O.H.L. = $\frac{9.4 \times 1 \times 1}{\frac{50}{2 \times 1000}} = 376$ N * Please add values as needed if there are other factors that may affect the O.H.L. of the product, such as belt tension.
⑤Determining a type	Determining a right angle shaft or parallel shaft	Based on the mounting space, decide on the MINI series H type (right angle shaft).

Select a model that meets the values calculated based on selection steps ① to ⑤ for each category.

	Category	
Calculation Result	Reduction Ratio	1/80
	Torque Calculation From the Performance Table, select a model with $T_{LE} \leq$ allowable output shaft torque (T_A).	9.4 N·m
		Select the model HLM-15$\frac{L}{R}_{T}$-80-T40, which meets the torque ($T_{LE} \leq T_A$).
	Inertia Calculation Based on [Table-1] on page 525, select a model that meets the condition of equivalent inertia ≤ allowable inertia.	0.000126 kg·m^2 Select a model that meets $J_{\ell E} \leq$ allowable moment of inertia J:
		Select the model HLM-18$\frac{L}{R}_{T}$-80-T60, which meets the inertia.
	O.H.L. Verification From the Performance Table, select a model that meets O.H.L. ≤ allowable O.H.L.	376 N
		Select the model HLM-18$\frac{L}{R}_{T}$-80-T60, which meets the O.H.L. (O.H.L. ≤ allowable O.H.L.).
Overall Verdict	Select a model that meets all conditions based on the torque, the inertia, and the O.H.L.	**Decide on the HLM-18$\frac{L}{R}_{T}$-80-T60.**

Selection Examples Speed Control Gearmotors

Application ..... Conveyor (light shock load)
Conveyor speed ..... 2 to 10 m/min
Carrying weight ..... 20 kg
Connection method ..... Chain (located in the center of the shaft)
Operation time ..... 12 hours/day
Number of startups and stops ... 10 times/day
Power source frequency ..... 60 Hz region
Friction coefficient ..... 0.2 (estimated)

Please utilize the calculation and selection tool on our website.
(https://sentei.nissei-gtr.co.jp/english/calculation)
You may calculate the necessary power by inputting the usage conditions and the series on our website.

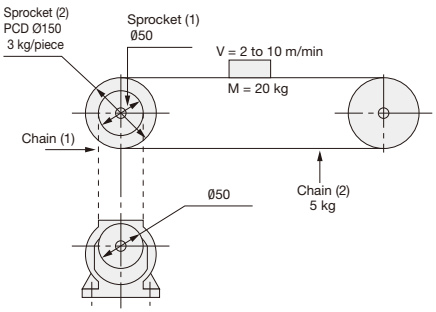

The chain (1), the sprocket (1), and other conditions shall not be included in this calculation.

Selection Process Steps		Selection Examples
①Determining the reduction ratio	Determining the reduction ratio (i) $i = \frac{\text{Required Speed of Output Shaft}}{\text{1550 (estimated)}}$	Required Rotational Speed of Conveyor Shaft = $\frac{2 \times 1000}{150 \times \pi}$ to $\frac{10 \times 1000}{150 \times \pi}$ = 4.2 to 21.2 r/min The required speed of the gearbox shaft is also between 4.2 and 21.2 r/min. Using the higher speed, 21.2 r/min, calculate the reduction ratio i. $i = \frac{21.2}{1550} \approx \frac{1}{73}$ (*The value is "1300" at 50 Hz.) Choose the closest value which is matching between calculation($i = \frac{1}{73}$) and standard model lineup. In this case it is $i = \frac{1}{60}$. Reduction ratio $i = \frac{1}{60}$
②Calculating the torque	Calculating the actual load torque (T_L) With use of the service factor (Sf) in [Table-1] on page 500, calculating the equivalent output torque (T_{LE}) $T_{LE}=T_L \times Sf$ From the Performance Table, select a model with $T_{LE} \leq$ allowable output shaft torque (T_A). [Figure-1]	$T_L = 9.8 \times (20 + 3 \times 2 + 5) \times 0.2 \times \frac{150}{2 \times 1000} = 4.6$ N·m Using the service factor (Sf), correct the actual load torque (T_L). $T_{LE} = 4.6 \times 1.25 \approx 5.8$ N·m $T_{LE} \leq T_A$ and based on the load torque T = 5.8 N·m and the reduction ratio $i = \frac{1}{60}$, select one of the following: GLP-12-60-S25 GLP-15-60-S40 GLP-15-60-S60. When the speed of the motor shaft is calculated, the maximum speed is 21.2 × 60 = 1272 r/min, and the minimum speed is 4.2 × 60 = 252 r/min. Confirm that the torque load factor is under the operating limit line. [Figure-1] Considering the torque load factor of GLP-12-60-S25: $\frac{5.8}{6.66} \times 100 = 87$ % (ℓ_1) GLP-15-60-S40: $\frac{5.8}{10.8} \times 100 = 54$ % (ℓ_2) GLP-15-60-S60: $\frac{5.8}{16.7} \times 100 = 35$ % (ℓ_3) Based on the abovementioned values, select GLP-15-60-S60.

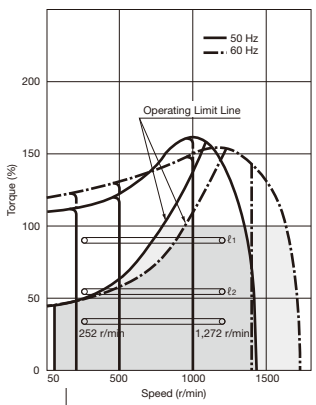

Selection Process Steps		Selection Examples
③Calculating the inertia	Calculating the actual inertial load	Calculating the actual load's moment of inertia (J_L) $J_L = \{20 \times (\frac{0.15}{2})^2\} + \{\frac{1}{2} \times 3 \times (\frac{0.15}{2})^2 \times 2\} + \{5 \times (\frac{0.15}{2})^2\}$ $= 0.16\ kg{\cdot}m^2$
	Calculating the inertial load on the motor shaft	Converting J_L into the motor shaft equivalent (J_ℓ) $J_\ell = J_L \times (i)^2$ $J_\ell = 0.16 \times (\frac{1}{60})^2$ $\approx 0.000044\ kg{\cdot}m^2$
	Calculating the equivalent inertia by correction based on operation conditions	Correction coefficient = 2 based on operation conditions
		Calculating the equivalent moment of inertia J ($J_{\ell E}$) $J_{\ell E} = J_\ell \times$ (Correction Coefficient) [Table-3] on page 525 $J_{\ell E} = 0.000044 \times 2 = 0.000088\ kg{\cdot}m^2$
④Verifying the O.H.L.	Determining the Coefficient K_1 based on [Table-1] on page 527 Determining the Coefficient K_2 based on [Table-2] on page 527	$K_1=1$ $K_2=1$
	O.H.L.$= \frac{T_{LE} \times K_1 \times K_2}{R}$ * R: Pitch circle radius of the sprocket etc. attached to the gearbox shaft	O.H.L.$= \frac{5.8 \times 1 \times 1}{\frac{50}{2 \times 1000}} = 232$ N * Please add values as needed if there are other factors that may affect the O.H.L. of the product, such as belt tension.
⑤Determining a type	Determining a right angle shaft or parallel shaft	Based on the mounting space, decide on the MINI series G type (parallel shaft).

Select a model that meets the values calculated based on selection steps ① to ⑤ for each category.

	Category	
Calculation Result	Reduction Ratio	1/60
	Torque Calculation From the Performance Table, select a model with $T_{LE} \leq$ allowable output shaft torque (T_A).	5.8 N·m
		Select the model GLP-12-60-S25 and GLP-15-60-S40, or only GLP-15-60-S40. They meet the torque ($T_{LE} \leq T_A$). When the speed of the motor shaft is calculated, select GLP-15-60-S60.
	Inertia Calculation Based on [Table-1] on page 525, select a model that meets the condition of equivalent inertia ≤ allowable inertia.	0.000088 kg·m² Select a model that meets $J_{\ell E} \leq$ allowable moment of inertia J:
		Select the model GLP-12-60-S25, which meets the inertia.
	O.H.L. Verification From the Performance Table, select a model that meets O.H.L. ≤ allowable O.H.L.	232 N
		Select the model GLP-12-60-S25, which meets the O.H.L. (O.H.L. ≤ allowable O.H.L.).
Overall Verdict	Select a model that meets all conditions based on the torque, the inertia, and the O.H.L.	**Decide on GLP-15-60-S60.**

MID Series

Selection Examples In the case of foot mount

Application ..... Conveyor (light shock load)
Conveyor speed ..... 10 m/min
Carrying weight ..... 620 kg
Connection method ..... Chain (located in the center of the shaft)
Operation time ..... 12 hours/day
Number of startups and stops ... 720 times/day
Power source frequency ..... 60 Hz region
Friction coefficient ..... 0.2 (estimated)

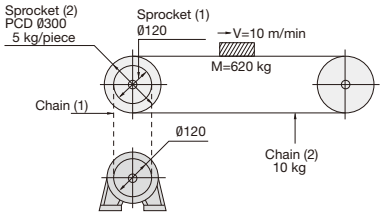

The chain (1), the sprocket (1), and other conditions shall not be included in this calculation.

Please utilize the calculation and selection tool on our website.
(https://sentei.nissei-gtr.co.jp/english/calculation)
You may calculate the necessary power by inputting the usage conditions and the series on our website.

Selection Process Steps		Selection Examples
①Selecting the reduction ratio	Determining the reduction ratio (i) $i = \frac{\text{Required Speed of Output Shaft}}{\text{Power Source Frequency}}$ ×30	Required Speed of Conveyor Shaft = $\frac{10 \times 1000}{300 \times \pi} \approx 10.6$ r/min Since the diameter of the sprocket for the conveyor shaft and that of the gearbox output shaft are the same: $i = \frac{10.6}{60 \times 30} \approx \frac{1}{160}$
②Calculating the torque	Calculating the actual load torque (T_L)	$T_L = 9.8 \times (620 + 2 \times 5 + 10) \times 0.2 \times \frac{300}{2 \times 1000} = 188$ N·m
	With use of the service factor (Sf) in [Table-1] on page 500, calculating the equivalent output torque (T_{LE})	Using the service factor (Sf), adjust the actual load torque (T_L).
	$T_{LE} = T_L \times Sf$	$T_{LE} = 188 \times 1.25 = 235$ N·m
③Calculating the inertia	Calculating the actual inertial load	Calculating the actual load's moment of inertia (J_L) $J_L = \{620 \times (\frac{0.3}{2})^2\} + \{\frac{1}{2} \times 5 \times (\frac{0.3}{2})^2 \times 2\} + \{10 \times (\frac{0.3}{2})^2\}$ $= 14.29$ kg·m²
	Calculating the inertial load on the motor shaft	Converting J_L into the motor shaft equivalent (J_ℓ) $J_\ell = J_L \times (i)^2$ $J_\ell = 14.29 \times (\frac{1}{160})^2$ ≈ 0.000558 kg·m²
	Calculating the equivalent inertia by correction based on operation conditions	Correction coefficient = 3 based on operation conditions
		Calculating the equivalent moment of inertia J ($J_{\ell E}$) $J_{\ell E} = J_\ell \times$ (Correction Coefficient)[Table-3] on page 525 $J_{\ell E} = 0.000558 \times 3 = 0.001674$ kg·m²
④Verifying the O.H.L.	Determining the Coefficient K_1 based on [Table-1] on page 527 Determining the Coefficient K_2 based on [Table-2] on page 527	$K_1 = 1$ $K_2 = 1$
	O.H.L.= $\frac{T_{LE} \times K_1 \times K_2}{R}$ * R: Pitch circle radius of the sprocket etc. attached to the gearbox shaft	O.H.L.= $\frac{235 \times 1 \times 1}{\frac{120}{2 \times 1000}} = 3917$ N * Please add values as needed if there are other factors that may affect the O.H.L. of the product, such as belt tension.
⑤Determining a type	Determining a parallel shaft, right angle shaft, or right angle hollow bore	Based on the mounting space, decide on a parallel shaft (G3 Type).

Select a model that meets the values calculated based on selection steps ① to ⑤ for each category.

	Category	
Calculation Result	Reduction Ratio	$\frac{1}{160}$
	Torque Calculation From the Performance Table, select a model with $T_{LE} \leq$ allowable output shaft torque (T_A).	235 N·m
		Select the model G3L32N160-MM04TNNTN, which meets the torque ($T_{LE} \leq T_A$).
	Inertia Calculation Based on [Table-2] on page 525, select a model that meets the condition of equivalent inertia ≤ allowable inertia.	0.001674 kg·m² Select a model that meets $J_{\ell E} \leq$ allowable moment of inertia J:
		Select the model G3L40N160-MR08TNNTN, which meets the inertia.
	O.H.L. Verification From the Performance Table, select a model that meets O.H.L. ≤ allowable O.H.L.	3917 N
		Select the model G3L32N160-MM04TNNTN, which meets the O.H.L. (O.H.L. ≤ allowable O.H.L.).
Overall Verdict	Select a model that meets all conditions based on the torque, the inertia, and the O.H.L.	**Decide on the G3L40N160-MR08TNNTN.**

Selection Examples In the case of shaft mount

Application ..... Conveyor (light shock load)
Conveyor speed ..... 30 m/min
Carrying weight ..... 100 kg
Connection method ..... Chain
Operation time ..... 12 hours/day
Number of startups and stops ... 720 times/day
Power source frequency ..... 60 Hz region
Friction coefficient ..... 0.2 (estimated)

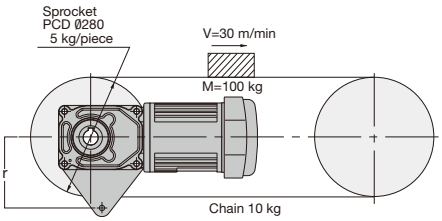

Conditions other than those shown in the selection process steps shall not be included in this calculation.

Please utilize the calculation and selection tool on our website.
(https://sentei.nissei-gtr.co.jp/english/calculation)
You may calculate the necessary power by inputting the usage conditions and the series on our website.

Selection Process Steps		Selection Examples
①Selecting the reduction ratio	Determining the reduction ratio (i) $i = \frac{\text{Required Speed of Output Shaft}}{\text{Power Source Frequency} \times 30}$	Required Speed of Conveyor Shaft = $\frac{30\times1000}{280\times\pi} \approx 34.1$ r/min Since the speed of the conveyor shaft and that of the gearbox output shaft are the same: $i = \frac{34.1}{60 \times 30} \approx \frac{1}{50}$
②Calculating the torque	Calculating the actual load torque (T_L)	$T_L = 9.8 \times (100 + 2 \times 5 + 10) \times 0.2 \times \frac{280}{2 \times 1000} = 32.9$ N·m
	With use of the service factor (Sf) in [Table-1] on page 500, calculating the equivalent output torque (T_{LE}) $T_{LE} = T_L \times Sf$	Using the service factor (Sf), adjust the actual load torque (T_L). $T_{LE} = 32.9 \times 1.25 = 41.1$ N·m
③Calculating the inertia	Calculating the actual inertial load	Calculating the actual load's moment of inertia (J_L) $J_L = \{100\times(\frac{0.28}{2})^2\} + \{\frac{1}{2} \times 5 \times (\frac{0.28}{2})^2 \times 2\} + \{10 \times (\frac{0.28}{2})^2\}$ $= 2.25$ kg·m^2
	Calculating the inertial load on the motor shaft	Converting J_L into the motor shaft equivalent (J_ℓ) $J_\ell = J_L \times (i)^2$ $J_\ell = 2.25 \times (\frac{1}{50})^2$ $= 0.0009$ kg·m^2
	Calculating the equivalent inertia by correction based on operation conditions	Correction coefficient = 3 based on operation conditions
		Calculating the equivalent moment of inertia J ($J_{\ell E}$) $J_{\ell E} = J_\ell \times$ (Correction Coefficient) [Table-3] on page 525 $J_{\ell E} = 0.0009 \times 3 = 0.0027$ kg·m^2
④Determining a type	Determining a parallel shaft, right angle shaft, or right angle hollow bore	Decide on the MID series F3 type F3S (right angle hollow bore) for mounting on the shaft.

Select a model that meets the values calculated based on selection steps ① to ④ for each category.

	Category	
Calculation Result	Reduction Ratio	$\frac{1}{50}$
	Torque Calculation From the Performance Table, select a model with $T_{LE} \leq$ allowable output shaft torque (T_A).	41.1 N·m
		Select the model F3S25N50-MM02TNNTN, which meets the torque ($T_{LE} \leq T_A$).
	Inertia Calculation Based on [Table-2] on page 525, select a model that meets the condition of equivalent inertia ≤ allowable inertia.	0.0027 kg·m^2 Select a model that meets $J_{\ell E} \leq$ allowable moment of inertia J:
		Select the model F3S35N50-MR08TNNTN, which meets the inertia.
Overall Verdict	Select a model that meets all conditions based on the torque and the inertia.	**Decide on the F3S35N50-MR08TNNTN.** For the torque arm, option part number TAF3S-35 is recommended. Refer to page 1007. Moreover, if the customer wishes to produce a torque arm, the distance r from the center of the output shaft to the detent is $r \geq \frac{\text{Actual load torque} \times 1000}{\text{Allowable O.H.L.–Product Weight}} = \frac{41.1 \times 1000}{3480 - 9.8 \times 21} = 12.6$ Design it to 12.4 mm or more. * For the equation for calculating the torque arm, refer to page 1003.

Service Factor (Sf)

The gearmotor and the gearbox are designed under the condition of operation for ten hours/day under a light shock load. If you will use them under a condition of a longer operation time and a heavy shock load, adjust the load torque based on the service factor shown in the table below.

[Table-1]

Load Condition	Service Factor (Sf)			Application Example
	Operating for less than 3 hours/day	Operating for 3 to 10 hours/day	Operating for more than 10 hours/day	
Uniform load	1	1	1	Conveyors (uniform load), screens, agitators (low viscosity), water treatment machines (light load), machine tools (feed shafts), elevators, extruders, distillers
Light shock load	1	1	1.25	Conveyors (nonuniform or heavy load), agitators (high viscosity), machines for vehicles, water treatment machines (moderate load), hoists (light load), paper mills, feeders, food machines, pumps, sugar making machines, textile machines
Heavy shock load	1	1.25	1.5	Hoists (heavy load), hammer mills, metal working machines, crushers, tumblers

Allowable Moment of Inertia J

If a gearmotor with a high load inertia is intermittently operated, high torque may occur upon starting (or when stopping if the product is provided with a brake), resulting in an unexpected accident. To prevent such occurrence, set the level of the inertia of the application to be within the allowable value shown in the table below based on the connection method and the frequency of startup.

■ Allowable moment of inertia J by motor power

(Motor shaft equivalent or input shaft equivalent)

MINI Series

Unit: Moment of Inertia J (kg·m²) [Table-1]

G Type	H Type	F2 Type		Allowable Moment of Inertia J
G-12 Frame G-22 Frame (15 W, 25 W, 40 W, 60 W)	H-15 Frame H-22 Frame (15 W, 25 W, 40 W, 60 W)	F2S-12 Frame	F2F-15 Frame	0.0001
G-15 Frame G-28 Frame G-32 Frame	H-18 Frame H-28 Frame H-32 Frame	F2S-15 Frame	F2F-18 Frame	0.0002
G-18 Frame G-40 Frame	H-40 Frame	–	–	0.0006

Note 1: Motor shaft (input shaft) equivalent moment of inertia J = output shaft moment of inertia J × (reduction ratio)²
(Example: 1/400 when the reduction ratio is 1/20)

MID Series

Unit: Moment of Inertia J (kg·m²) [Table-2]

3-Phase	1-Phase	Allowable Moment of Inertia J
0.1 kW	0.1 kW	0.0008
0.2 kW	0.2 kW	0.0010
0.4 kW	0.4 kW	0.0015
0.75 kW	–	0.0030
1.5 kW	–	0.0050
2.2 kW	–	0.0070

Note 1: When using a gearbox at an input speed of 1800 r/min or more, the value calculated by multiplying the abovementioned value by (1800/input r/min)² is the allowable moment of inertia J.
(Example: When the input shaft r/min is 3600, the allowable moment of inertia is 1/4.)
Note 2: Motor shaft (input shaft) equivalent moment of inertia J = output shaft moment of inertia J × (reduction ratio)²
(Example: 1/400 when the reduction ratio is 1/20)

■ Correction coefficient of allowable moment of inertia J according to operating conditions

[Table-3]

Connection Method	Frequency of Startup	Correction Coefficient
When direct coupling or without any loosening.	70 times/day or below	1
	More than 70 times/day	1.5
When there is loosening due to chain fastening.	70 times/day or below	2
	More than 70 times/day	3

Method for Calculating the Moment of Inertia J

■ Rotor's moment of inertia J

When the center of rotation is aligned with the center of gravity		When the center of rotation is not aligned with the center of gravity	
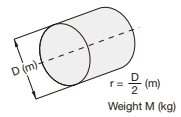	$J = \frac{1}{2} Mr^2$ (kg·m²)	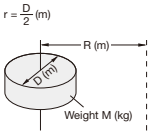	$J = \frac{1}{2} Mr^2 + MR^2$ (kg·m²)
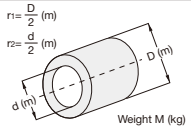	$J = \frac{1}{2} M (r_1^2 + r_2^2)$ (kg·m²)	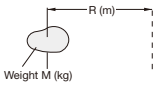	(When the size is negligible) $J = MR^2$ (kg·m²)

■ Moment of inertia J in case of linear motion

General case	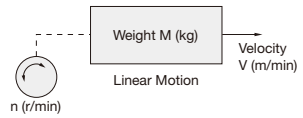	$J = \frac{1}{4} M \cdot \left(\frac{V}{\pi \cdot n}\right)^2$ (kg·m²)
In the case of horizontal linear motion (When moving an object with a lead screw)	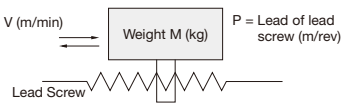	$J = \frac{1}{4} M \cdot \left(\frac{P}{\pi}\right)^2 = \frac{1}{4} M \cdot \left(\frac{V}{\pi \cdot n}\right)^2$ (kg·m²)
In the case of horizontal linear motion (Conveyor etc.)	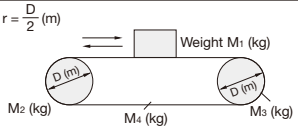	$J = M_1 r^2 + \frac{1}{2} M_2 r^2 + \frac{1}{2} M_3 r^2 + M_4 r^2$ (kg·m²)
In the case of vertical linear motion (Crane, winch, etc.)	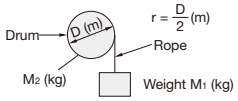	$J = M_1 r^2 + \frac{1}{2} M_2 r^2$ (kg·m²)

■ Conversion of the moment of inertia when the speed ratio is available

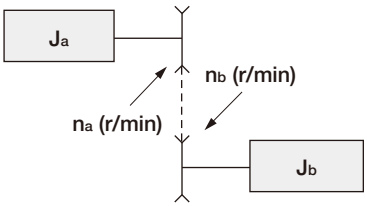

Convert the load's moment of inertia J_b into the equivalent value on the n_a shaft.

$$J = J_a + \left(\frac{n_b}{n_a}\right)^2 \times J_b$$

Overhung Load (O.H.L.)

An overhung load (O.H.L.) is a suspending load imposed on a shaft. When a chain, belt, gear, etc. is used to couple the gearbox shaft with the application, the resulting O.H.L. must be taken into consideration.

$$\text{O.H.L.} = \frac{T_{LE} \times K_1 \times K_2}{R} \text{ (N)}$$

- T_{LE} : Equivalent output torque acting on the gearbox shaft (N·m)
- R : Pitch circle radius of the sprocket, pulley, gear, etc. to be attached to gearbox shaft (m)
- K_1 : Refer to the coefficient for the connection method [Table-1].
- K_2 : Refer to the coefficient for the load point [Table-2].

■ Coefficient K_1

[Table-1]

Connection method	K_1
Chain, timing belt	1.00
Gear	1.25
V Belt	1.50

■ Coefficient K_2

[Table-2]

Load Point	K_2
Base of the shaft	0.75
Middle of the shaft	1.00
End of Output Shaft	1.50

<Load Point>

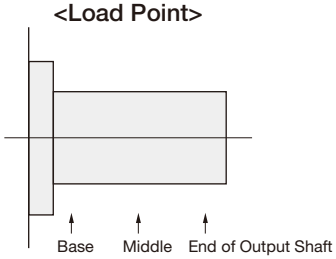

Thrust Load

The allowable thrust load values of right angle hollow bore models are listed in the performance table.
For other models, please contact your nearest Sales Office or the CS Center.

Overhung Load (O.H.L.)

MINI Series <Right Angle Hollow Bore/F2S Type>

■ In the case of flange mount

(1) Load point of O.H.L.
The load point of the allowable O.H.L. is calculated to be 10 mm from the end of the output shaft.

(2)-1 Correcting the O.H.L. when one end of the output shaft is not borne by a pillow
If the load point L of the O.H.L. is more than 10 mm, please correct using the following formula:

$$\text{Corrected O.H.L. (N)} = \frac{A+10}{A+L} \times \text{Allowable O.H.L. (N)}$$

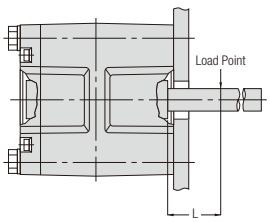

(2)-2 Correcting the O.H.L. when one end of the output shaft is borne by a pillow

Please correct using the following formula:

$$\text{Corrected O.H.L. (N)} = \frac{S}{S-L} \times \text{Allowable O.H.L. (N)}$$

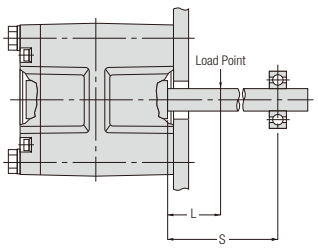

■ Constant A

Frame Size	A (mm)
12	43
15	55

■ In the case of shaft mount

If the customer chooses to to produce a torque arm of their own

● In case of using the torque arm as shown in [Figure-1]

the distance r from the center of the output shaft to the detent can be calculated with the following formulas:

SI Units

$$r\ (\text{mm}) \geq \frac{\text{Actual load torque (N·m)} \times 1000}{\text{Allowable O.H.L. (N)} - 9.8 \times \text{Gearmotors Weight (kg)}}$$

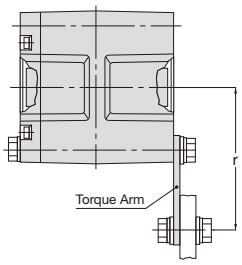

[Figure-1]

● In case of using the torque arm as shown in [Figure-2]

the distance r from the center of the output shaft to the detent can be calculated with the following formulas:

SI Units

$$r\ (\text{mm}) \geq \frac{\text{Actual load torque (N·m)} \times (A + M) \times 1000}{\{\text{Allowable O.H.L. (N)} - 9.8 \times \text{Gearmotors Weight (kg)}\} \times (A + 10)}$$

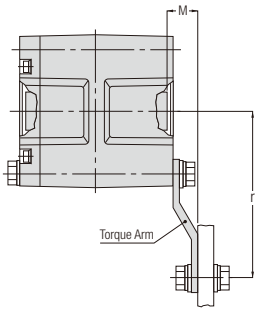

[Figure-2]

■ Constant A

Frame Size	A (mm)
12	43
15	55

Note: For the plate thickness of the torque arm, see “Torque Arms (Optional)” on page 1006.

MID Series <Right Angle Hollow Bore/FS Type>

■ In the case of flange mount

(1) Load point of O.H.L.
The load point of the allowable O.H.L. is calculated to be 20 mm from the end of the output shaft.

(2)-1 Correcting the O.H.L. when one end of the output shaft is not borne by a pillow
If the load point L of the O.H.L. is more than 20 mm, Please correct using the following formula:

$$\text{Corrected O.H.L. (N)} = \frac{A+20}{A+L} \times \text{Allowable O.H.L. (N)}$$

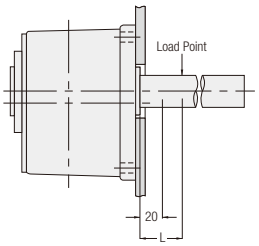

■ Constant A

Frame Size	A (mm)
25	84.5
30	91
35	98
45	113
55	150

(2)-2 Correcting the O.H.L. when one end of the output shaft is borne by a pillow

Please correct using the following formula:

$$\text{Corrected O.H.L. (N)} = \frac{S}{S-L} \times \text{Allowable O.H.L. (N)}$$

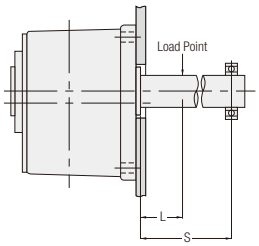

MID Series <Concentric Right Angle Hollow Bore/F3S Type>

■ In the case of flange mount

(1) Load point of O.H.L.
The load point of the allowable O.H.L. is calculated to be 20 mm from the end of the output shaft.

(2)-1 Correcting the O.H.L. when one end of the output shaft is not borne by a pillow
If the load point L of the O.H.L. is more than 20 mm, please correct using the following formula:

$$\text{Corrected O.H.L. (N)} = \frac{A+20}{A+L} \times \text{Allowable O.H.L. (N)}$$

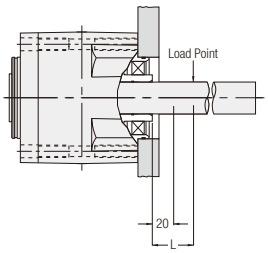

■ Constant A

Frame Size	A (mm)
20	73.5
25	90.5
30	98
35	114
45	136

(2)-2 Correcting the O.H.L. when one end of the output shaft is borne by a pillow

Please correct using the following formula:

$$\text{Corrected O.H.L. (N)} = \frac{S}{S-L} \times \text{Allowable O.H.L. (N)}$$

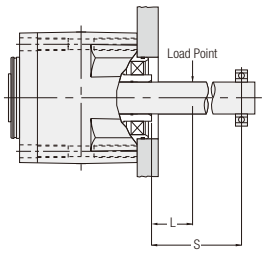

Material for Calculating Gearmotors with Brake and Gearmotors with Clutch/Brake

		Notes
Braking Time·Connection Time of Clutch (t_{tb})	$t_{tb}=t_{ab}+t_a$ (s) $t_{ab}=\frac{(J_r+J_\ell)\times n}{9.55\times(Td\pm T\ell)}$ (s)	Note 1: When the load torque becomes negative in, for example, hoisting down, $T\ell$ will be "-$T\ell$." Note 2: With regard to "+ and -" signs, "-" will be given to the clutch, and "+" will be given to the brake.
Connection Work Load (E)	Connection work load of the brake and the clutch per operation $E=\frac{(J_r+J_\ell)\times n^2}{183}\times\frac{Td}{Td\pm T\ell}$ (J)	Note 1: When the load torque becomes negative in, for example, hoisting down, $T\ell$ will be "-$T\ell$." Note 2: With regard to "+ and -" signs, "-" will be given to the clutch, and "+" will be given to the brake.
Service Life	Since the service life of the brake lining varies depending on the surface pressure, temperature, slip speed, etc., it cannot be accurately calculated. However, an approximate number of lifetime brake cycles can be estimated using the following formula: $Z=\frac{Emax}{E}$ [Number of brake cycles]	

【Explanation of Codes】

t_a ····· Braking Delay Time ····· [Tables-1 and -2] on page 569
Armature suction time of a gearmotors with clutch/brake ····· [Table-2] on page 539

J_r ····· In the case of gearmotors with brake and IP65 gearmotors with brake ····· [Tables-3 and -4] on page 532
In the case of gearmotors with clutch/brake ····· [Table-5] on page 532

J_ℓ ····· Load's moment of inertia J converted into the equivalent value on the motor shaft or gearbox input shaft ($kg\cdot m^2$)

n ····· Speed of the clutch shaft or brake shaft (r/min)

Td ····· Rated Torque and dynamic friction torque to the relative speed of the clutch and the brake (N·m)
In the case of gearmotors with brake and IP65 gearmotors with brake ····· [Tables-1 and -2] on page 538, [Table-1] on page 539
In the case of gearmotors with clutch/brake ····· [Table-2] on page 539

$T\ell$ ····· Load torque converted into the equivalent value on the gearbox input shaft (N·m)

$Emax$ ····· Allowable work load of the clutch and the brake
In the case of gearmotors with brake and IP65 gearmotors with brake ····· [Table-2] on page 538, [Table-1] on page 539
In the case of gearmotors with clutch/brake ····· [Table-2] on page 539

Moment of Inertia of the Gearmotors

MINI Series

■ Moment of inertia J of the gearmotors (motor + gearbox) by power and by frame size

<Motor shaft equivalent>

Unit: Moment of Inertia J (kg·m²) [Table-1]

Number of Phases	Type/Frame Size				Power (W)	Gearmotor/IP65 Gearmotor		Gearmotor with Brake/ IP65 Gearmotor with Brake	
	G Type	H Type	F2 Type			200 V	400 V	200 V	400 V
3-Phase	G-12 Frame G-22 Frame	H-15 Frame H-22 Frame	F2S-12 Frame	F2F-15 Frame	15	0.00005	0.00006	0.00007	0.00008
					25	0.00006	0.00006	0.00008	0.00008
					40	0.00007	0.00008	0.00009	0.00009
					60	0.00008	0.00008	0.00009	0.00009
	G-15 Frame G-28 Frame G-32 Frame	H-18 Frame H-28 Frame H-32 Frame	F2S-15 Frame	F2F-18 Frame	25	0.00008	0.00008	0.00010	0.00010
					40	0.00008	0.00008	0.00010	0.00010
					60	0.00010	0.00012	0.00012	0.00014
					90	0.00012	0.00013	0.00014	0.00014
	G-18 Frame G-40 Frame	H-40 Frame	-	-	40	0.00034	0.00034	0.00036	0.00036
					60	0.00034	0.00034	0.00036	0.00036
					90	0.00034	0.00034	0.00036	0.00036

Note: IP65 gearmotors and IP65 gearmotors with a brake are not available for 400 V.

Unit: Moment of Inertia J (kg·m²) [Table-2]

Number of Phases	Type/Frame Size				Power (W)	Gearmotor/IP65 Gearmotor		Gearmotor with Brake/ IP65 Gearmotor with Brake	
	G Type	H Type	F2 Type			100 V	200 V	100 V	200 V
1-Phase	G-12 Frame G-22 Frame	H-15 Frame H-22 Frame	F2S-12 Frame	F2F-15 Frame	15	0.00005	0.00005	0.00007	0.00007
					25	0.00006	0.00006	0.00008	0.00008
					40	0.00008	0.00008	0.00009	0.00009
					60	0.00008	0.00008	0.00009	0.00009
	G-15 Frame G-28 Frame G-32 Frame	H-18 Frame H-28 Frame H-32 Frame	F2S-15 Frame	F2F-18 Frame	25	0.00008	0.00008	0.00010	0.00010
					40	0.00010	0.00010	0.00012	0.00012
					60	0.00013	0.00013	0.00014	0.00014
					90	0.00013	0.00013	0.00014	0.00014
	G-18 Frame G-40 Frame	H-40 Frame	-	-	40	0.00034	0.00034	0.00036	0.00036
					60	0.00034	0.00034	0.00036	0.00036
					90	0.00035	0.00035	0.00036	0.00036

Note: IP65 gearmotors and IP65 gearmotors with a brake are not available for 200 V.

MID Series

■ Moment of inertia J of the gearmotors/IP65 gearmotors (motor + gearbox)

<Motor shaft equivalent, common to each reduction ratio> [Table-1]

Motor Power	3-Phase 0.1 kW	3-Phase 0.2 kW	3-Phase 0.4 kW	3-Phase 0.75 kW	3-Phase 1.5 kW	3-Phase 2.2 kW
Moment of Inertia J (kg·m²)	0.00048	0.00053	0.0011	0.0024	0.0062	0.0105

[Table-2]

Motor Power	1-Phase 0.1 kW (H2, F, and F3 Type)	1-Phase 0.1 kW (G3 Type)	1-Phase 0.2 kW	1-Phase 0.4 kW
Moment of Inertia J (kg·m²)	0.00046 (Note 1)	0.00080	0.00091	0.00271

Note 1: The values are those obtained with the capacitor in operation.

■ Moment of inertia J of the gearmotors with brake/IP65 gearmotor (motor + gearbox)

<Motor shaft equivalent, common to each reduction ratio> [Table-3]

Motor Power	3-Phase 0.1 kW	3-Phase 0.2 kW	3-Phase 0.4 kW	3-Phase 0.75 kW	3-Phase 1.5 kW	3-Phase 2.2 kW
Moment of Inertia J (kg·m²)	0.00054	0.00076	0.0012	0.0029	0.0067	0.0109

Note: IP65 gearmotors with a brake are not available for 1.5 kW and 2.2 kW.

[Table-4]

Motor Power	1-Phase 0.1 kW (H2, F, and F3 Type)	1-Phase 0.1 kW (G3 Type)	1-Phase 0.2 kW	1-Phase 0.4 kW
Moment of Inertia J (kg·m²)	0.00070 (Note 1)	0.00103	0.00115	0.0030

Note 1: The values are those obtained with the capacitor in operation.

■ Moment of inertia J of the gearmotors with clutch/brake (clutch/brake + gearbox)

<Motor shaft equivalent> [Table-5]

Motor Power	3-Phase 0.1 kW	3-Phase 0.2 kW	3-Phase 0.4 kW	3-Phase 0.75 kW
Moment of Inertia J (kg·m²)	0.00035	0.00035	0.0085	0.0011

■ Moment of inertia J of the gearbox (double shaft type)

<Input shaft equivalent> [Table-6]

4 Poles Motor Power Class	0.1 kW	0.2 kW	0.4 kW	0.75 kW	1.5 kW	2.2 kW
Moment of Inertia J (kg·m²)	0.000006	0.000007	0.000017	0.00006	0.00018	0.0003

■ Moment of inertia J of the S-type gearbox (double shaft type)

<Input shaft equivalent> [Table-7]

4 Poles Motor Power Class	0.1 kW	0.2 kW	0.4 kW	0.75 kW	1.5 kW	2.2 kW
Moment of Inertia J (kg·m²)	0.000023	0.000025	0.00003	0.000073	0.00019	0.0004

Structural Drawings

MINI Series <G Type>

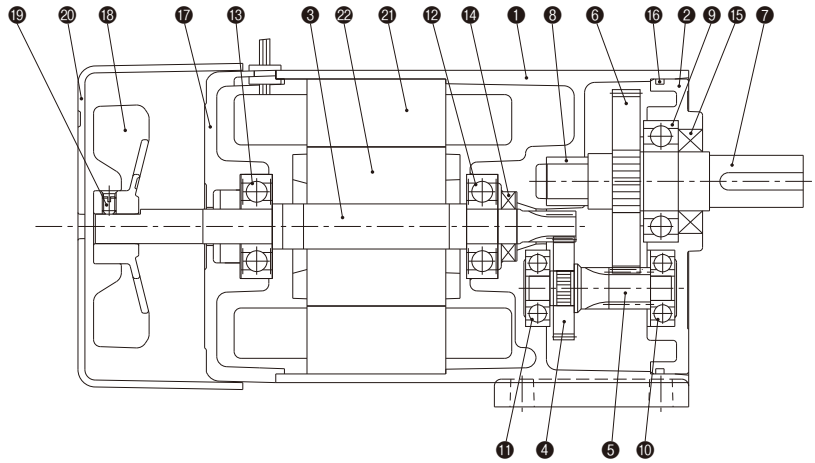

❶Case	❻Output Shaft Gear	⓫Bearing	⓰O-ring	㉑Stator
❷Case Cover	❼Output Shaft	⓬Bearing	⓱Motor Bracket	㉒Rotor
❸Input Shaft	❽Metal Bearing	⓭Bearing	⓲Fan	
❹1 Stage Gear	❾Bearing	⓮Oil Seal	⓳Set Screw	
❺1 Stage Pinion	❿Bearing	⓯Oil Seal	⓴Fan Cover	

MINI Series <F2F Type>

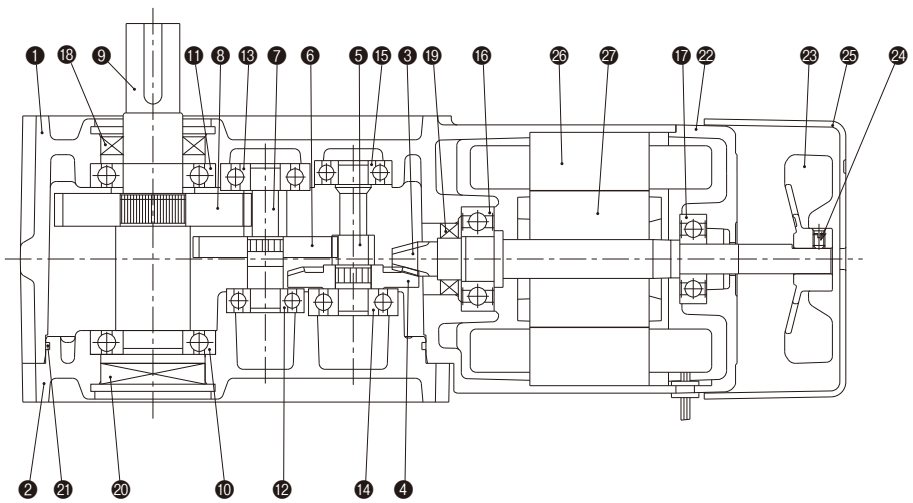

❶Case	❻2 Stage Gear	⓫Bearing	⓰Bearing	㉑O-ring	㉖Stator
❷Case Cover	❼2 Stage Pinion	⓬Bearing	⓱Bearing	㉒Motor Bracket	㉗Rotor
❸Input Shaft	❽Output Shaft Gear	⓭Bearing	⓲Oil Seal	㉓Fan	
❹1 Stage Gear	❾Output Shaft	⓮Bearing	⓳Oil Seal	㉔Set Screw	
❺1 Stage Pinion	❿Bearing	⓯Bearing	⓴Seal Cap	㉕Fan Cover	

MINI Series <F2S Type>

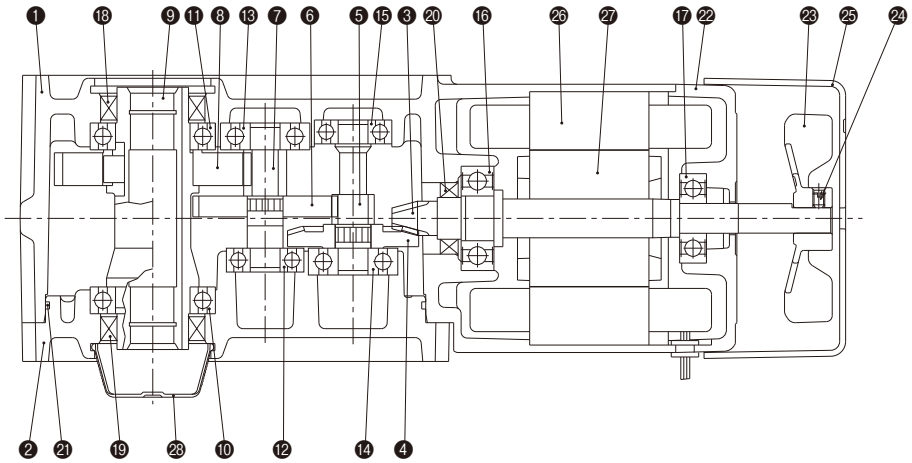

❶ Case	❻ 2 Stage Gear	⓫ Bearing	⓰ Bearing	㉑ O-ring	㉖ Stator
❷ Case Cover	❼ 2 Stage Pinion	⓬ Bearing	⓱ Bearing	㉒ Motor Bracket	㉗ Rotor
❸ Input Shaft	❽ Output Shaft Gear	⓭ Bearing	⓲ Oil Seal	㉓ Fan	㉘ Safety Cap
❹ 1 Stage Gear	❾ Output Shaft	⓮ Bearing	⓳ Oil Seal	㉔ Set Screw	
❺ 1 Stage Pinion	❿ Bearing	⓯ Bearing	⓴ Oil Seal	㉕ Fan Cover	

MID Series 3-Phase <G3 Type/GA Type>

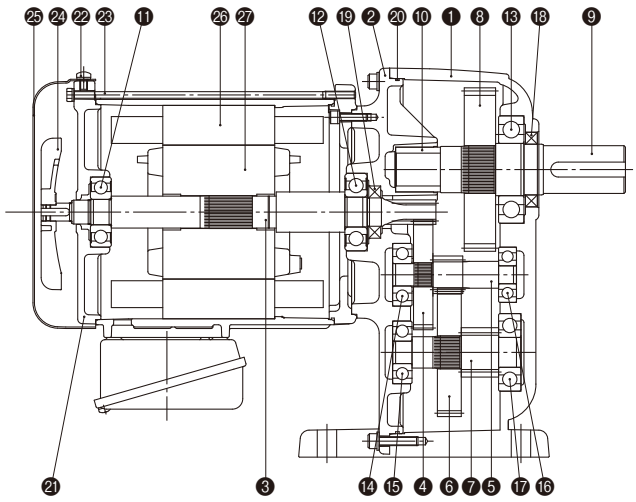

❶ Case	❻ 2 Stage Gear	⓫ Bearing	⓰ Bearing	㉑ Motor Bracket	㉖ Stator
❷ Bracket	❼ 2 Stage Pinion	⓬ Bearing	⓱ Bearing	㉒ Mounting Screw	㉗ Rotor
❸ Input Shaft	❽ Output Shaft Gear	⓭ Bearing	⓲ Oil Seal	㉓ Through Bolt	
❹ 1 Stage Gear	❾ Output Shaft	⓮ Bearing	⓳ Oil Seal	㉔ Fan	
❺ 1 Stage Pinion	❿ Metal Bearing	⓯ Bearing	⓴ O-ring	㉕ Fan Cover	

MID Series 1-Phase <G3/GA Type>

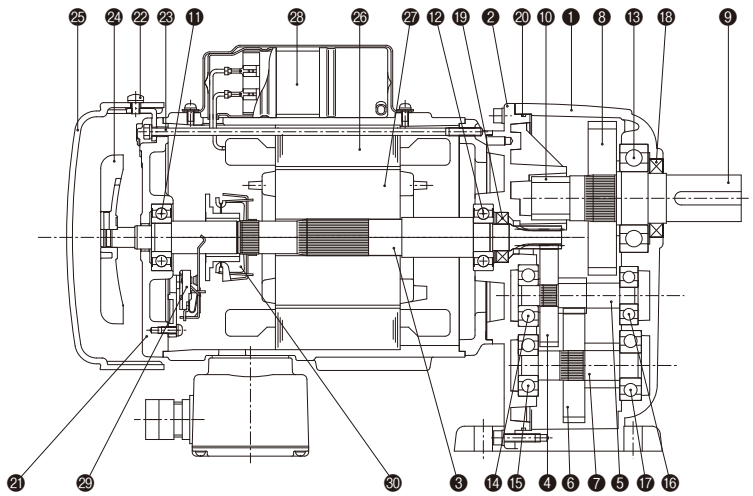

❶Case	❻2 Stage Gear	⓫Bearing	⓰Bearing	㉑Motor Bracket	㉖Stator
❷Bracket	❼2 Stage Pinion	⓬Bearing	⓱Bearing	㉒Mounting Screw	㉗Rotor
❸Input Shaft	❽Output Shaft Gear	⓭Bearing	⓲Oil Seal	㉓Through Bolt	㉘Capacitor
❹1 Stage Gear	❾Output Shaft	⓮Bearing	⓳Oil Seal	㉔Fan	㉙Centrifugal Force Switch Fixture
❺1 Stage Pinion	❿Metal Bearing	⓯Bearing	⓴O-ring	㉕Fan Cover	㉚Centrifugal Force Switch Rotating Part

MID Series 3-Phase <F3F Type>

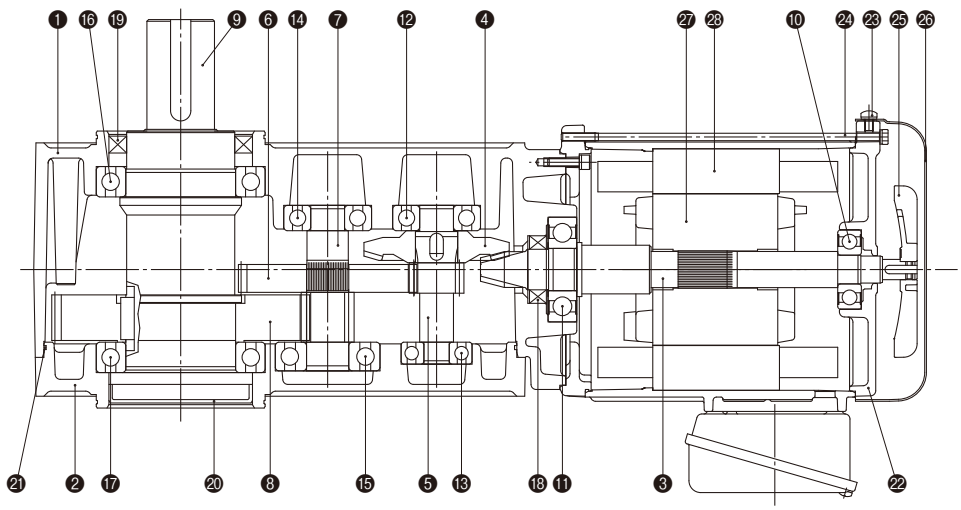

❶Case	❻2 Stage Gear	⓫Bearing	⓰Bearing	㉑O-ring	㉖Fan Cover
❷Case Cover	❼2 Stage Pinion	⓬Bearing	⓱Bearing	㉒Motor Bracket	㉗Rotor
❸Input Shaft	❽Output Shaft Gear	⓭Bearing	⓲Oil Seal	㉓Mounting Screw	㉘Stator
❹1 Stage Gear	❾Output Shaft	⓮Bearing	⓳Oil Seal	㉔Through Bolt	
❺1 Stage Pinion	❿Bearing	⓯Bearing	⓴Seal Cap	㉕Fan	

MID Series 1-Phase <F3F Type>

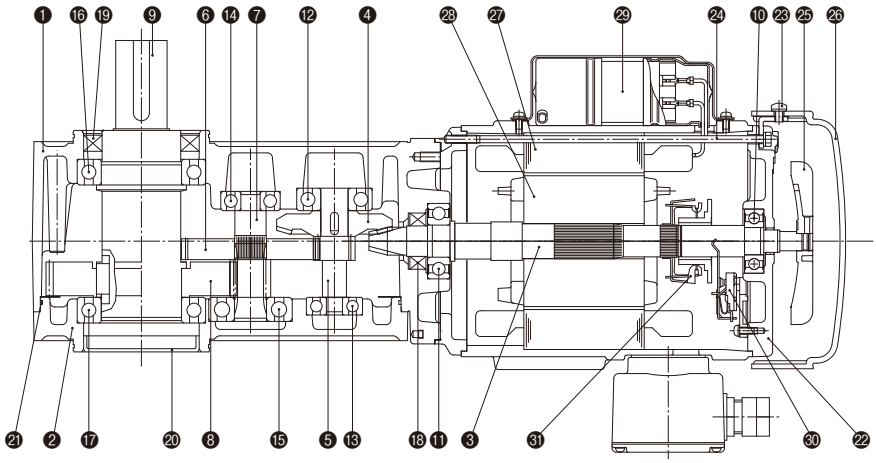

❶Case	❻2 Stage Gear	⑪Bearing	⑯Bearing	㉑O-ring	㉖Fan Cover	㉛Centrifugal Force
❷Case Cover	❼2 Stage Pinion	⑫Bearing	⑰Bearing	㉒Motor Bracket	㉗Stator	Switch Rotating Part
❸Input Shaft	❽Output Shaft Gear	⑬Bearing	⑱Oil Seal	㉘Mounting Screw	㉘Rotor	
❹1 Stage Gear	❾Output Shaft	⑭Bearing	⑲Oil Seal	㉔Through Bolt	㉙Capacitor	
❺1 Stage Pinion	❿Bearing	⑮Bearing	⑳Seal Cap	㉕Fan	㉚Centrifugal Force Switch Fixture	

MID Series 3-Phase <F Type/FA Type>

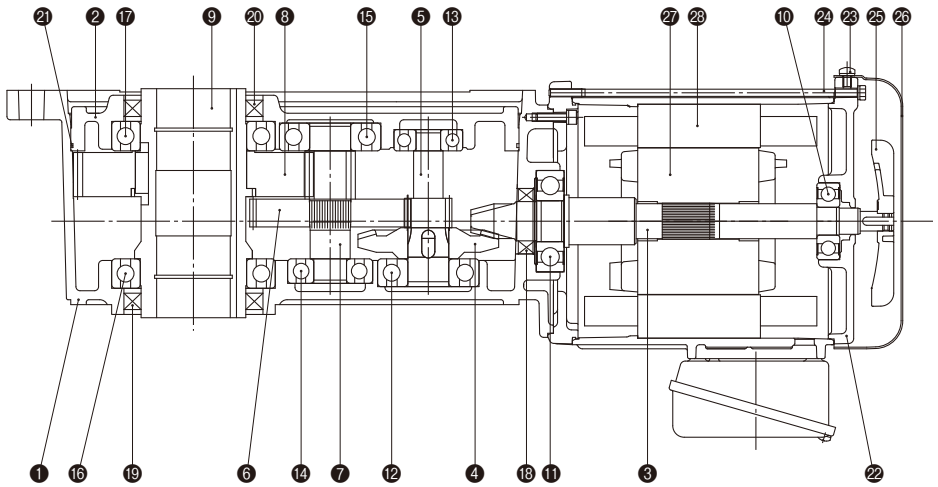

❶Case	❻2 Stage Gear	⑪Bearing	⑯Bearing	㉑O-ring	㉖Fan Cover
❷Case Cover	❼2 Stage Pinion	⑫Bearing	⑰Bearing	㉒Motor Bracket	㉗Rotor
❸Input Shaft	❽Output Shaft Gear	⑬Bearing	⑱Oil Seal	㉘Mounting Screw	㉘Stator
❹1 Stage Gear	❾Output Shaft	⑭Bearing	⑲Oil Seal	㉔Through Bolt	
❺1 Stage Pinion	❿Bearing	⑮Bearing	⑳Oil Seal	㉕Fan	

MID Series 1-Phase <F Type/FA Type>

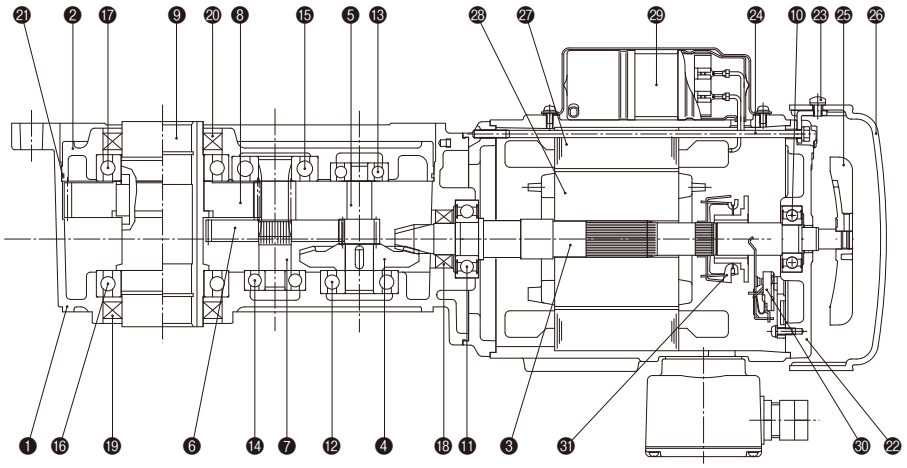

❶Case
❷Case Cover
❸Input Shaft
❹1 Stage Gear
❺1 Stage Pinion
❻2 Stage Gear
❼2 Stage Pinion
❽Output Shaft Gear
❾Output Shaft
❿Bearing
⓫Bearing
⓬Bearing
⓭Bearing
⓮Bearing
⓯Bearing
⓰Bearing
⓱Bearing
⓲Oil Seal
⓳Oil Seal
⓴Oil Seal
㉑O-ring
㉒Motor Bracket
㉓Mounting Screw
㉔Through Bolt
㉕Fan
㉖Fan Cover
㉗Stator
㉘Rotor
㉙Capacitor
㉚Centrifugal Force Switch Fixture
㉛Centrifugal Force Switch Rotating Part

MID Series <Gearmotor with Clutch/Brake>

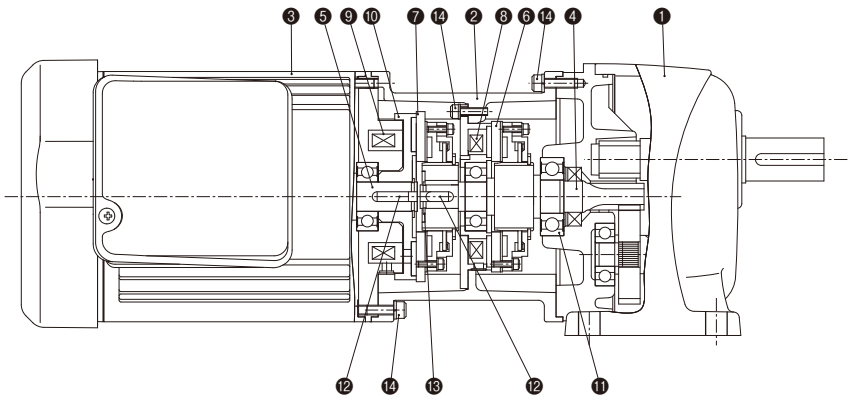

❶Gearhead
❷Bracket
❸Motor
❹OSP (Spline Movable Model)
❺Motor Shaft
❻Armature (For brake)
❼Armature (For Clutch)
❽Field (For Brake)
❾Field (For Clutch)
❿Clutch Rotor
⓫Bearing
⓬Key
⓭Retaining Ring
⓮Hex Head Cap Screw

Specifications and Structure of Gearmotors with Brake

Standard Motors

■ Brake Specifications

MINI Series

[Table-1]

Category \ Motor Power	3-Phase [200 V/400 V], 1-Phase [200 V]					1-Phase [100 V]				
	15 W	25 W	40 W	60 W	90 W	15 W	25 W	40 W	60 W	90 W
Brake Type	Power-Off (Spring Close)									
Rated Torque N·m (At 1500 to 1800 r/min)	0.37				0.54	0.37				0.54
Voltage <Average> (V)	DC90 (Rectifier A200-D90 Included)					DC45 (Rectifier A200-D90 included)				
Power (at 75 °C) (W)	12					11				
Current (at 75 °C) (A)	0.13					0.24				
Allowable Work Load Emax (J)	2.9×10^7									
Allowable Braking Frequency (times/minute)	10									

Note 1: The allowable braking frequency is an approximate value based on predicted temperature rise of the motor. The braking frequency may be increased when the motor load is light or when the motor can be sufficiently cooled. (Keep the motor surface temperature below 90 °C.)
Note 2: Please avoid continuous energization of the brake coil while the motor is inactive.
Note 3: Please use the included rectifier as the brake power supply. If you intend to use a power supply other than the attached rectifier, please contact your nearest Sales Office or the CS Center.
Note 4: The rated torque is a reference value. Not guaranteed values.
Note 5: Use the rated torque value for "Td" when calculating the braking time and connection work load of the brake per operation.
Note 6: With regard to a Three-phase 400 V motor, connect the lead wire (red) from the motor.

MID Series (3-Phase)

[Table-2]

Category \ Motor Power		0.1 kW	0.2 kW	0.4 kW	0.75 kW	1.5 kW	2.2 kW
Brake Type		Power-Off (Spring Close)					
Static Friction Torque Ts (N·m)		1.0	1.9	3.92	7.35	14.7	21.6
Dynamic Friction Torque Td (N·m)		0.80	1.52	3.14	5.88	11.8	17.3
Voltage (Average) (V)	200 V Class	DC90 (Rectifier A200-D90-UL Included)					
	400 V Class	DC180 (Rectifier A400-D180 Included)					
Power (at 75 °C) (W)	200 V Class	11	11	14	20	22	25
	400 V Class	10	10	13	19	23	27
Current (at 75 °C) (A)	200 V Class	0.12	0.12	0.16	0.22	0.24	0.28
	400 V Class	0.06	0.06	0.07	0.11	0.13	0.15
Allowable Work Load Emax	(J)	1.5×10^8	1.5×10^8	1.5×10^8	4.0×10^8	6.0×10^8	6.0×10^8
Allowable Braking Frequency (times/minute)		10					

Note 1: The allowable braking frequency is an approximate value based on predicted temperature rise of the motor. The braking frequency may be increased when the motor load is light or when the motor can be sufficiently cooled.
Note 2: Please use the included rectifier as the brake power supply. If you intend to use a power supply other than the included rectifier, please contact your nearest Sales Office or the CS Center.
Note 3: The input voltage to the rectifier must be used within the range specified below. Please note that repeated operation at a voltage beyond this range may cause a malfunction.
200 V class (A200-D90-UL): 200 V to 230 VAC 400 V class (A400-D180): 380 V to 480 VAC
Note 4: Due to the structure of the brake, the disc produces friction noise during motor operation. However, this does not affect the performance of the brake.
Note 5: Noise from the brake part may increase when operating with an inverter/VFD due to the brake structure, but there is no problem in terms of brake performance.

MID Series (1-Phase)

[Table-1]

Category \ Motor Power		0.1 kW	0.2 kW	0.4 kW
Brake Type		Power-Off (Spring Close)		
Static Friction Torque Ts (N·m)		0.98	1.96	3.92
Dynamic Friction Torque Td (N·m)		0.78	1.57	3.14
Voltage (Average) (V)	100 V Class	DC90 (Rectifier A100-D90-UL Included)		
	200 V Class	DC90 (Rectifier A200-D90-UL Included)		
Power (at 75 °C) (W)	100 V Class	15	15	26
	200 V Class	15	15	26
Current (at 75 °C) (A)	100 V Class	0.17	0.17	0.29
	200 V Class	0.17	0.17	0.29
Allowable Work Load Emax	(J)	1.5×10^8	1.5×10^8	4.0×10^8
Allowable Braking Frequency (times/minute)		6		

Note 1: The allowable braking frequency is an approximate value based on predicted temperature rise of the motor. The braking frequency may be increased when the motor load is light or when the motor can be sufficiently cooled.
Note 2: Please avoid continuous energization of the brake coil while the motor is inactive.
Note 3: Please use the included rectifier as the brake power supply. If you intend to use a power supply other than the included rectifier, please contact your nearest Sales Office or the CS Center.
Note 4: The intended service life of the contact of the centrifugal switch of the Single-phase motor is about 300,000 times.
Note 5: The static friction torque and the dynamic friction torque are reference values. Not guaranteed values.
Note 6: The input voltage to the rectifier must be used within the range specified below. Please note that repeated operation at a voltage beyond this range may cause a malfunction.
A100-D90-UL: 100 to 120 VAC
A200-D90-UL: 200 to 230 VAC

MID Series with Clutch/Brake

[Table-2]

Category \ Motor Power	3-Phase 0.1 kW	3-Phase 0.2 kW	3-Phase 0.4 kW	3-Phase 0.75 kW
Activation Method	Power-On (Spring Close)			
Static Friction Torque Ts (N·m)	1.96	1.96	3.92	7.35
Dynamic Friction Torque Td (N·m)	1.57	1.57	3.14	5.88
Voltage (Average) (V)	DC90 (Rectifier A200-D90 Included)			
Power (at 75 °C, clutch/brake) (W)	10/12	10/12	14/16	13/19
Current (at 75 °C, clutch/brake) (A)	0.11/0.14	0.11/0.14	0.15/0.18	0.14/0.21
Armature Suction Time ta (s)	0.010	0.010	0.015	0.020
Torque Startup Time (s)	0.020	0.020	0.050	0.070
Torque Disappearance Time (s)	0.015	0.015	0.020	0.040
Allowable Connection Work Load (per time) (J)	15	15	27	49
Allowable Work Load Emax (J)	1.2×10^8	1.2×10^8	2.2×10^8	4.3×10^8
Allowable Frequency (times/minute)	50			

Note 1: The allowable braking frequency is an approximate value and varies depending on the usage conditions etc.
Note 2: The allowable braking frequency is an approximate value limited by the rise of the motor temperature.
The braking frequency may be increased when the motor load is light or when the motor can be sufficiently cooled.
Note 3: Please avoid continuous energization of the clutch/brake coil while the motor is inactive.
Note 4: Please use the included rectifier as the clutch/brake power supply.
If you intend to use a power supply other than the included rectifier, please contact your nearest Sales Office or the CS Center.
Note 5: The input voltage to the rectifier must be used within the range specified below. Please note that repeated operation at a voltage beyond this range may cause a malfunction.
A200-D90: 200 V to 220 VAC
Note 6: The static friction torque and the dynamic friction torque are reference values. Not guaranteed values.

■ Brake Structural Diagram

MINI Series

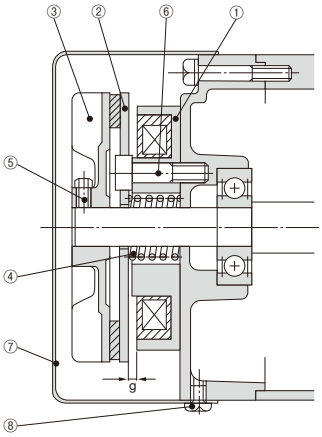

①	Field
②	Armature
③	Fan Assembly
④	Spring
⑤	Hex Head Phillips Bolt
⑥	Hex Head Cap Screw
⑦	Fan Cover
⑧	Fixing Screw for Fan Cover
	g: Gap

MID Series (3-Phase)

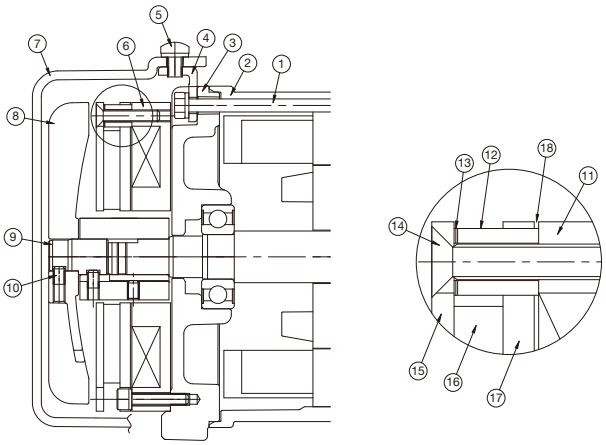

Note: A 0.1 kW gearmotor is a totally enclosed non-ventilated type and therefore not provided with a fan.

①	Through Bolt
②	Motor Frame
③	Bracket
④	Stay
⑤	Set Screw for Fan Cover
⑥	Brake
⑦	Fan Cover
⑧	Fan
⑨	Extension Shaft
⑩	Set Screw for Fan
⑪	Magnet Assembly
⑫	Collar
⑬	Shim
⑭	Flat Head Screw
⑮	Plate
⑯	Disk
⑰	Armature
⑱	g: Gap

MID Series (1-Phase)

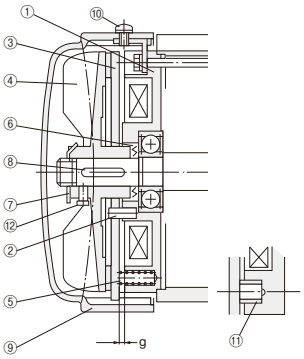

Note: The bolts for 0.4 kW motors are hex head cap screws.

①	Bracket with Field
②	Spring Pin
③	Armature
④	Fan Assembly
⑤	Spring 1
⑥	Spring 2
⑦	Tooth Lock Washer Nut
⑧	Key
⑨	Fan Cover
⑩	Fixing Screw for Fan Cover
⑪	Bush
* ⑫	Hex Head Phillips Bolt
	g: Gap

■ Brake Gap Values

If the brake is used for an extended period of time, the gap will widen and will disable the brake release.
Adjust the gap periodically (about annually or every 1 million to 1.5 million times of use).

MINI Series

Motor Power	Suction Gap	Suitable Gap
15 W to 90 W	g: 0.8 or less	g: 0.4

MID Series (3-Phase)

[Table-1]

Motor Power	Gap (mm)			Recommended Tightening Torque [N·m]	Flat Head Screw Size
	Initial	Limitation	Adjustable		
3-Phase 0.1 kW	0.05 to 0.25	0.4	0.3	2.1 to 2.3	M4
3-Phase 0.2 kW	0.05 to 0.25	0.4	0.3	2.1 to 2.3	M4
3-Phase 0.4 kW	0.05 to 0.25	0.4	0.35	2.1 to 2.3	M4
3-Phase 0.75 kW	0.05 to 0.25	0.45	0.4	2.1 to 2.3	M4
3-Phase 1.5 kW	0.05 to 0.25	0.55	0.5	6.9 to 7.6	M6
3-Phase 2.2 kW	0.05 to 0.35	0.55	0.5	6.9 to 7.6	M6

MID Series (1-Phase)

[Table-2]

Motor Power	Suction Gap	Suitable Gap
1-Phase 0.1 kW	g: 2.3 or less	g: 1.9 ± 0.1
1-Phase 0.2 kW		
1-Phase 0.4 kW	g: 2.4 or less	g: 2.0 ± 0.1

■ Inspecting and adjusting the brake gap

MINI Series MID Series (1-Phase)

If the brake is used for an extended period of time, the friction disk of the brake will get worn, and the gap (g) will gradually increase.
If the gap (g) becomes wider than the suction gap, it will become more difficult for the magnet to attract the armature upon excitation, and the brake may be disabled from being released properly.
Operating the motor continuously in this condition would lead to the motor running along with brake applied. This may cause overheating of the motor, brake and deteriorate the functionality of the gearmotor.
In order to operate this product safely, inspect or adjust the brake gap periodically (annually or every 1 million to 1.5 million times of use).

MID Series (3-Phase)

If the disk gets worn as a result of long hours of operation and if the gap between the magnet assembly and the armature exceeds the gap limit value shown in [Table-1] above, the brake may malfunction or become unable to be released. For more information about how to inspect and adjust the amount of the gap, refer to the Instruction Manual.
Please note that you can adjust the gap only once. If the adjusted gap exceeds the gap limit again, the brake needs to be replaced. Please contact your nearest Sales Office or the CS Center.

IP65 Motors

■ Brake Specifications

MINI Series

Motor/Output Shaft Frame Size / Category	3-Phase [200 V]			3-Phase [200 V]				1-Phase [100 V]		1-Phase [100 V]		
	15 W	25 W	40 W	25 W	40 W	60 W	90 W	15 W	25 W	25 W	40 W	60 W
	G-12 H-15 F-12	G-12 H-15 F-12	G-12 H-15 F-12	G-15	G-15 G-18 H-18 F-15	G-15 G-18 H-18 F-15	G-18 H-18 F-15	G-12 H-15 F-12	G-12 H-15 F-12	G-15	G-15 G-18 H-18 F-15	G-18
Brake Type	Power-Off (Spring Close)											
Rated Torque N·m <At 1500 to 1800 r/min>	0.32			0.72				0.32		0.72		
Voltage <Average> (V)	DC90 (Rectifier A200-D90 Included)							DC45 (Rectifier A100-D45 Included)				
Power <at 75 °C> (W)	5.8			6.9				5.3		6.8		
Current <at 75 °C> (A)	0.06			0.08				0.12		0.15		
Allowable Work Load Emax J	2.5×10^7			2.9×10^7				2.5×10^7		2.9×10^7		
Allowable Braking Frequency (times/minute)	10											

Note 1: The allowable braking frequency is an approximate value based on predicted temperature rise of the motor. The braking frequency may be increased when the motor load is light or when the motor is sufficiently cooled. (Keep the motor surface temperature below 90 °C.)
Note 2: Please avoid continuous energization of the brake coil while the motor is inactive.
Note 3: Please use the included rectifier as the brake power supply. If you intend to use a power supply other than the attached rectifier, please contact your nearest Sales Office or the CS Center.
Note 4: The rated torque is a reference value. Not guaranteed values.

MID Series (3-Phase)

Category / Motor Power		0.1 kW	0.2 kW	0.4 kW	0.75 kW
Brake Type		Power-Off (Spring Close)			
Static Friction Torque Ts (N·m)		1.0	1.9	3.92	7.35
Dynamic Friction Torque Td (N·m)		0.80	1.52	3.14	5.88
Voltage (Average) (V)	200 V Class	DC90 (Rectifier A200-D90-UL Attached)			
	400 V Class	DC180 (Rectifier A400-D180 Attached)			
Power (at 75 °C) (W)	200 V Class	11	11	15	19
	400 V Class	12	12	14	19
Current (at 75 °C) (A)	200 V Class	0.12	0.12	0.17	0.21
	400 V Class	0.07	0.07	0.08	0.11
Allowable Work Load Emax	(J)	1.5×10^8	1.5×10^8	1.5×10^8	4.0×10^8
Allowable Braking Frequency (times/minute)		10			

Note 1: The allowable braking frequency is an approximate value based on predicted temperature rise of the motor. The braking frequency may be increased when the motor load is light or when the motor can be sufficiently cooled.
Note 2: Please avoid continuous energization of the brake coil while the motor is inactive.
Note 3: Please use the included rectifier as the brake power supply. If you intend to use a power supply other than the included rectifier, please contact your nearest Sales Office or the CS Center.
Note 4: The input voltage to the rectifier must be used within the range specified below. Please note that repeated operation at a voltage beyond this range may cause a malfunction.
200 V Class (A200-D90-UL): 200 V to 230 VAC 400 V Class (A400-D180): 380 V to 480 VAC
Note 5: Due to the structure of the brake, the disc produces friction noise during motor operation. However, this does not affect the performance of the brake.
Note 6: Noise from the brake part may increase when operating with an inverter/VFD due to the brake structure, but there is no problem in terms of brake performance.

■ Brake Structural Drawings

MINI Series

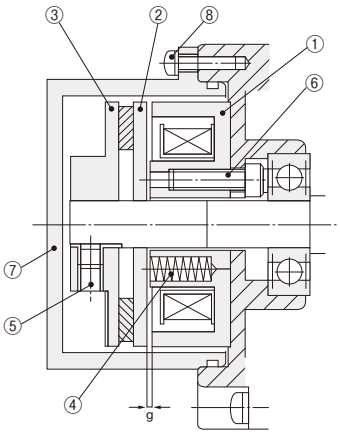

①	Field
②	Armature
③	Friction Disk Assembly
④	Spring
⑤	Set Screw
⑥	Hex Head Cap Screw
⑦	Brake Cover
⑧	Round Head Screw
	g: Gap

Properties

The gearmotor complies with IP65 of IEC Standards.

- This gearmotor is suitable for an environment where water spatters or water washing is periodically performed.
- IP65 is the indication showing the dustproof or water-resistant grade of the product.
- “6” in “IP65” indicates a “complete dustproof structure, and “5” indicates a “protective structure against water jets from any direction.”

Note: Not to be used underwater or in places where high water pressure is applied.

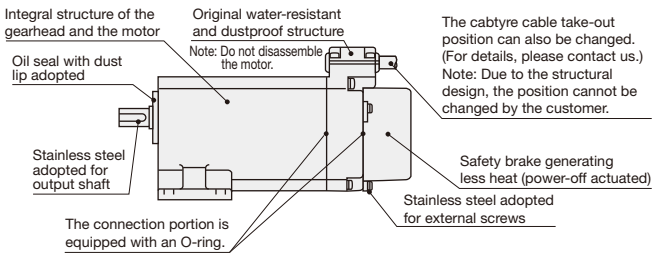

MID Series (3-Phase)

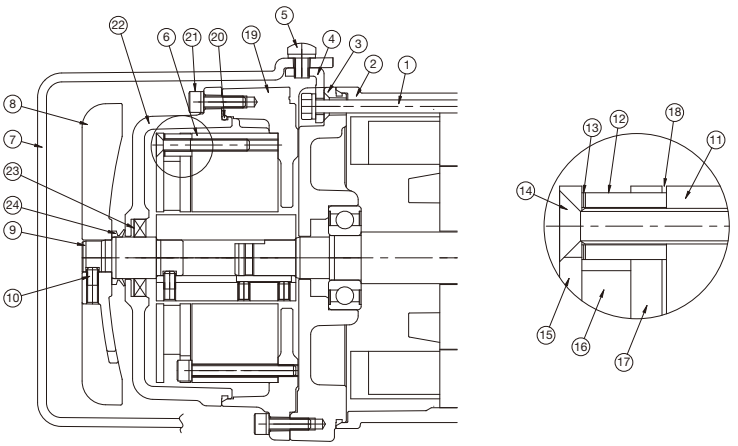

①	Through Bolt
②	Motor Frame
③	Bracket
④	Stay
⑤	Set Screw for Fan Cover
⑥	Brake
⑦	Fan Cover
⑧	Fan
⑨	Extension Shaft
⑩	Set Screw for Fan
⑪	Magnet Assembly
⑫	Collar
⑬	Shim
⑭	Flat Head Screw
⑮	Plate
⑯	Disk
⑰	Armature
⑱	g: Gap
⑲	Spacer
⑳	O-ring
㉑	Cover Fixing Bolt
㉒	Brake Cover
㉓	Oil Seal
㉔	V-ring

Note: An IP65 0.1 kW gearmotor is a totally enclosed non-ventilated type, and therefore, not provided with a fan cover, fan, and V-ring.

■ Brake Gap Values

MID Series (3-Phase)

[Table-1]

Motor Power	Gap (mm)			Recommended Tightening Torque [N·m]	Flat Head Screw Size
	Initial	Limitation	Adjustable		
3-Phase 0.1 kW	0.05 to 0.15	0.45	0.4	2.1 to 2.3	M4
3-Phase 0.2 kW	0.05 to 0.15	0.45	0.4	2.1 to 2.3	M4
3-Phase 0.4 kW	0.05 to 0.15	0.45	0.4	2.1 to 2.3	M4
3-Phase 0.75 kW	0.05 to 0.15	0.5	0.4	2.1 to 2.3	M4

■ Inspecting and adjusting the brake gap

MID Series (3-Phase)

If the disk gets worn as a result of long hours of use and the gap between the magnet assembly and the armature exceeds the gap limit value shown in [Table-1] above, the brake may malfunction or become unable to be released. For more information about how to inspect and adjust the amount of the gap, refer to the Instruction Manual.
Please note that you can adjust the gap only once. If the adjusted gap exceeds the gap limit again, the brake needs to be replaced. Please contact your nearest Sales Office or the CS Center.

Specifications of Gearmotors with Simple Brake/Motor Lead Wires

Gearmotors with Simple Brake

MINI Series

A simple brake (optional) can be mounted on a gearmotor (with a motor). If you require a simple brake on your unit, please inform us when placing an order.

- A simple brake mechanism is provided in order to reduce the costing of the motor.
- Available for both Three-phase and Single-phase gearmotors.
- The holding force values of gearmotors are as shown in the <table below>. If stronger holding force is required, please select a gearmotor with a brake.
- The values are rated values for 30 minutes.

■ Specifications (Reference Values)

Frame	Power	Holding Torque N·cm	Overrun (Running)
G-12·22 H-15·22 F2S-12 F2F-15	15 W	2.9	3 to 5
	25 W		
	40 W		
	60 W		
G-15·28·32 H-18·28·32 F2S-15 F2F-18	25 W	5.9	3 to 5
	40 W		
	60 W		
	90 W		
G-18·40 H-40	40 W	7.4	10 to 15
	60 W		
	90 W		

Note: The overrun is a value under no load.

Motor Lead Wires Specifications

■ Motor Lead Wires

Series	Number of Phases	Voltage	Motor Power	Lead Wire Specifications
MINI	1-Phase	Standard Voltage	15 W to 90 W	UL3266 AWG20
		High Voltage (200 V Class)		
	3-Phase	Standard Voltage		
		High Voltage (400 V Class)		UL3271 AWG24
MID	1-Phase	Standard Voltage	0.1 kW (Capacitor Run)	UL3271 AWG18
		High Voltage (200 V Class)		
		Standard Voltage	0.1 kW (Capacitor Start)	UL3398 AWG16
		High Voltage (200 V Class)		
		Standard Voltage	0.2 kW, 0.4 kW (Capacitor Start)	
		High Voltage (200 V Class)		
	3-Phase	Standard Voltage	0.1 kW to 2.2 kW	UL3289 AWG20
		High Voltage (400 V Class)		

Note: The specification of the lead wires of the MINI Series IP65 gearmotors with a brake is 0.5 mm², which is the same size as AWG20.
The specification of the lead wires of the MINI Series IP65 gearmotors is 0.75 mm².

■ Brake Lead Wires

Series	Number of Phases	Use of Lead Wires
MINI	3-Phase/1-Phase	UL3266 AWG20
MID	3-Phase	UL3888 AWG22
	1-Phase	UL3266 AWG20
	Clutch/Brake 3-Phase	UL3266 AWG20

Wiring Diagram of Gearmotors

MINI Series

■ 3-Phase Motor

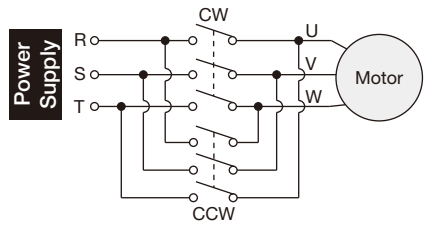

Figure - Codes	Lead Wire Type		Terminal Box Type
	200 V	400 V	Terminal Code
U	Black	Black	U
V	Gray	Brown	V
W	White	White	W

■ 1-Phase Motor

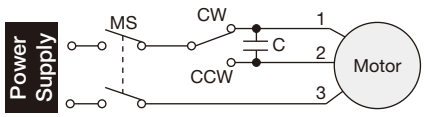

MS : Magnet Switch C: Capacitor

Figure - Codes	Lead Wire Type		Terminal Box Type
	100 V	200 V	Terminal Code
1	Blue	Brown	1
2	Black	Black	2
3	Gray	Gray	3

Note: The rotational direction of the output shaft is shown in the performance table for each model.

■ Capacitor

A capacitor is absolutely required for the operation of a Single-phase motor. Upon use, please connect the included capacitor to the product.
All Single-phase motors are connected by a reversible connection (three lead wires) and can therefore run in the CW and CCW directions as Three-phase motors do.

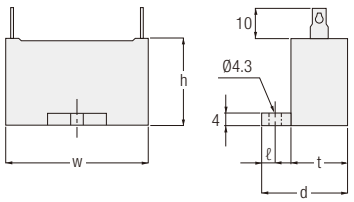

Rated Voltage	Power (μF)	w	h	t	d	ℓ	Input Supply Power
220 V	2.5	31	23.5	14.5	24.5	4.5	100 V
	3.5	31	23.5	14.5	24.5		
	4.5	31	27	17	27		
	5	31	27	17	27		
	6	37	27	18	28		
	7	37	27	18	28		
	8	38	29	19	29		
	9	38	29	19	29		
	10	48	29	19	29		
	12	48	29	19	29		
	13	48	29	19	29		
	14	58	31	21	31		
	15	58	31	21	31		
	20	58	35	22	32		
	26	58	37	23.5	38.5	7	

Note: For the capacitance of the capacitor, refer to each performance table.

Rated Voltage	Power (μF)	w	h	t	d	ℓ	Input Supply Power
440 V	1.7	38	31	21	31	4.5	200 V
	2.2	48	29	19	29		
	3.2	58	31	21	31		
	6.5	58	41	29	44	7	
450 V	1	37	27	18	28	4.5	
	1.2	37	27	18	28		
	1.5	38	31	21	31		
	2	38	31	21	31		
	2.5	48	31	21	31		
	3	58	31	21	31		
	3.5	58	35	22	32		
	5	58	41	29	44	7	

MID Series (3-Phase)

■ Gearmotors Connection (No Brake)

Please use the connection shown below for gearmotors without a brake.
The rotational direction of the output shaft by the connection described below is shown in the performance table for each series.
* For more information about the voltage codes, refer to page 599.
* For the wiring diagrams of gearmotors with a brake, refer to from page 553 onwards.

■ Lead Wires: 3 Lead Wires Type

Voltage Codes	Voltage/Frequency	Wiring Diagram
NN	200 V/50 Hz 200 V/60 Hz 220 V/60 Hz	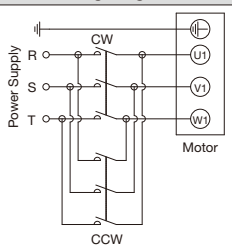
WN	380 V/50 Hz 400 V/50 Hz 400 V/60 Hz 440 V/60 Hz	
EN	415 V/50 Hz 440 V/50 Hz 480 V/60 Hz	
MA	575 V/60 Hz	

Note: Use the attached nuts for the connection.

■ Lead Wires: 6 Lead Wires Type

Voltage Codes	Voltage/Frequency	Wiring Diagram
KN (Dual Voltage) CN (Dual Voltage) DN (Dual Voltage)	220 V/60 Hz 220 V/50 Hz 230 V/50 Hz	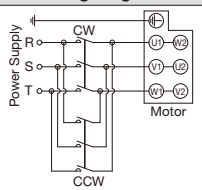
	380 V/60 Hz 380 V/50 Hz	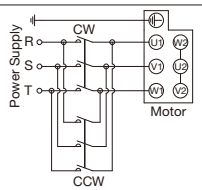

Note: Use the attached nuts and short board for the connection.

■ Lead Wires: 9 Lead Wires Type

Voltage Codes	Voltage/Frequency	Wiring Diagram
AN (Dual Voltage) UN (Dual Voltage)	208 V/60 Hz 230 V/60 Hz	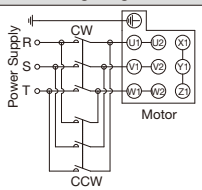
	460 V/60 Hz 400 V/50 Hz	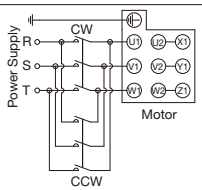

Note: Use the attached nuts and short board for the connection.

MID Series (1-Phase)

■ Gearmotors Connection

Connect the wires of a standard gearmotor as shown below.
The rotational direction of the output shaft by the connection described below is shown in the performance table for model.

■ 1-Phase Motors (Capacitor Start)/Common through G3, GA, H2, F, FA, and F3 Type

Standard Voltage Motor power: 0.1 kW (G3 Type only), 0.2 kW, 0.4 kW	High Voltage (200 V Class) Motor power: 0.1 kW (G3/GA Type only), 0.2 kW, 0.4 kW
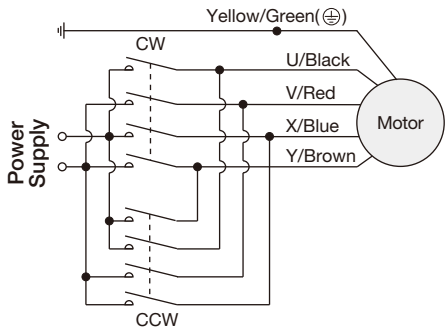	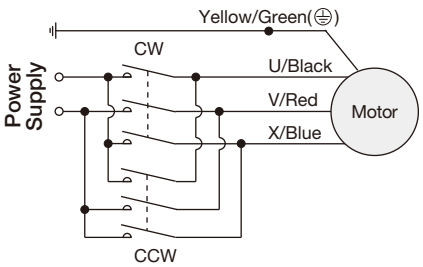

Note 1:GA and FA types are available only in 0.4 kW.

■ 1-Phase Motors (Capacitor Run)/H2, F, and F3 Type

Standard Voltage Motor power: 0.1 kW (Except for G3 Type)	High Voltage (200 V Class) Motor power: 0.1 kW (Except for G3 Type)
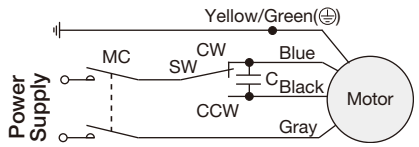	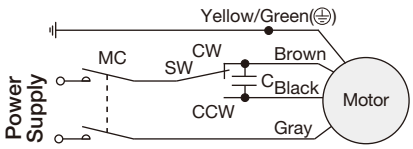

Note 1: A capacitor is required to operate the 1-phase capacitor run type motor. Connect the included capacitor to use the motor.Refer to the following figure.
SW: CW/CCW Switch C: Capacitor MC: Magnetic Contactor
Note 2: 1-phase capacitor run type motors have built-in thermal protectors.Refer to page 643 for the cautions for use.

■ Capacitor

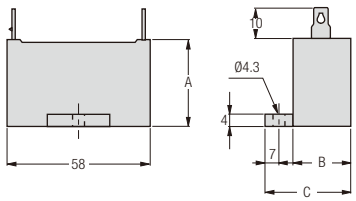

Voltage	Rated Voltage	Power	Approx. Weight	Dimension Diagram (mm)		
				A	B	C
100 V	250 V	30 μF	100 g	50	35	50
200 V	450 V	7 μF	100 g	41	29	44

Wiring Diagram of Gearmotors with Brake

Connection Types and How to Select

Connection	How to Select	Inverter	Lifting Operation	Reduced Wiring	Braking Delay Time
(1) AC Switching (B)	This is the simplest method, and the motor can run simply by connecting the power supply line. This connection method requires fewer wires.	× (Unusable)	× (Unusable)	◎	△
(2) DC Switching	This connection method is optimal for applications requiring sudden braking, mainly for lifting operation, since it offers the shortest braking delay time.	○ (Usable)	◎ (Optimal)	△	◎
(3) AC Switching (A)	This connection method can separate the circuit between the motor and the brake and is optimal for driving with an inverter.	◎ (Optimal)	○ (Usable)	○	○

Note: The braking delay time is the time from the moment of turning off the switch to the start of braking, and is different from the braking time.
For the braking delay times caused by the different connection methods, refer to [Table-1] on page 569.
.If you require braking time information, refer to the material for calculating braking times on page 530.

MINI Series

■ Precautions for Wiring

- Please utilize DC switching when using the gearmotor for vertical operation (lifting).
- For a DC switching connection, please connect a surge suppressor (optional) between the contacts. For surge suppressors (optional), refer to page 589.
- In the case of a Single-phase 100 V gearmotor, the input voltage of rectifier A200-D90 (A100-D45) is 100 VAC, and the output voltage is 45 VDC.
- Use switches of 110 VDC with a contact point rating of DC13 to block the inductive load of the DC coil when using DC switching connection. For more details, please contact your nearest Sales Office or the CS Center.
  * Contact rating class DC13 is a specification applicable to coil loads and a type defined in JIS C 8201-5-1 (Low-voltage switchgear and control gear).
- Please note that the rectifier contains a diode which will become unusable if it is shorted out due to, for example, improper wiring.
- For connection methods for Three-phase High Voltage (400 V Class) and special voltages exceeding 220 V, connect the separate 200 V terminal (red lead wire) drawn out of the motor to the input lead wire (white/yellow) of the rectifier. The separate 200 V terminal drawn out of the motor cannot be used when using an inverter.
- For information and precautions involving the connection for using an inverter, refer to page 591.

■ Standard Voltage

Connection	3-phase 15 to 90 W	1-phase 15 to 90 W
(1) AC Switching (B)	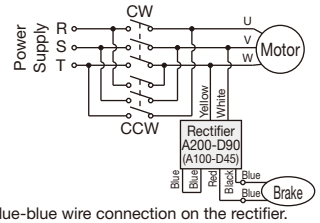 Short the blue-blue wire connection on the rectifier.	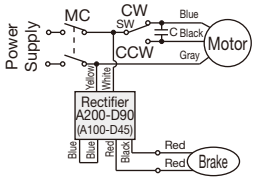 Short the blue-blue wire connection on the rectifier.
(2) DC Switching	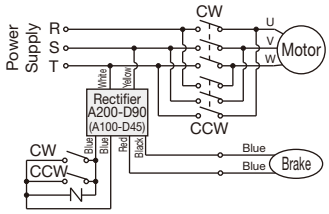 Short the blue-blue wire connection on the rectifier.	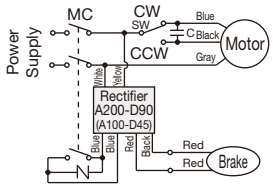 Short the blue-blue wire connection on the rectifier.
(3) AC Switching (A)	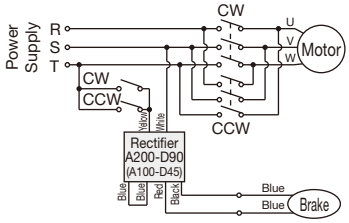 Short the blue-blue wire connection on the rectifier.	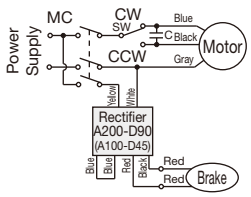 Short the blue-blue wire connection on the rectifier.

SW: CW/CCW Switch C: Capacitor MC: Magnetic Contactor -N-: Surge Suppressor (optional)

■ High Voltage

Connection	3-phase 15 W to 90 W (400 V Class)	1-phase 15 W to 90 W (200 V Class)
(1) AC Switching (B)	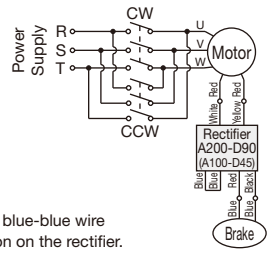 Short the blue-blue wire connection on the rectifier.	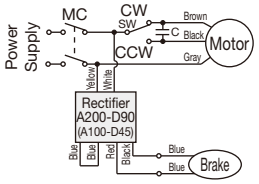 Short the blue-blue wire connection on the rectifier.
(2) DC Switching	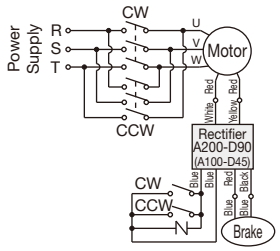	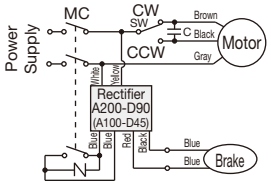
(3) AC Switching (A)	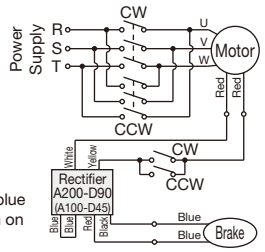 Short the blue-blue wire connection on the rectifier.	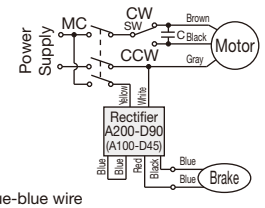 Short the blue-blue wire connection on the rectifier.

SW: CW/CCW Switch C: Capacitor MC: Magnetic Contactor –N–: Surge Suppressor (optional)

■ C Type Terminal Box (3-Phase)

Connection	3-Phase		
AC Switching (B)	Standard Voltage / High Voltage (400 V Class)		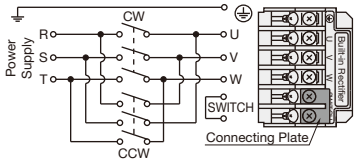
DC Switching	Standard Voltage / High Voltage (400 V Class)		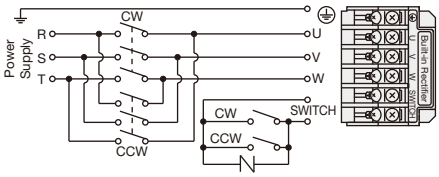
AC Switching (A) Custom Specifications	Standard Voltage		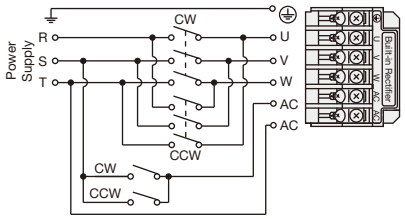
	High Voltage (400 V Class) Motor 200V Terminal		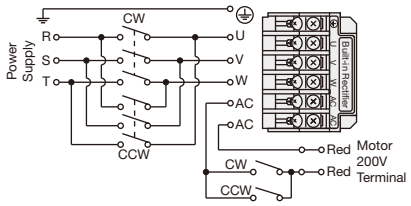
Separate Rectifier Custom Specifications	Standard Voltage	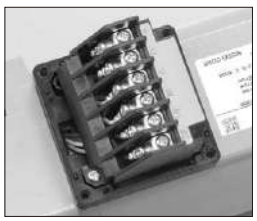	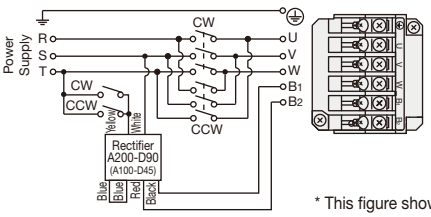 * This figure shows AC switching (A).
	High Voltage (400 V Class) Motor 200V Terminal	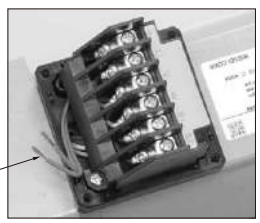	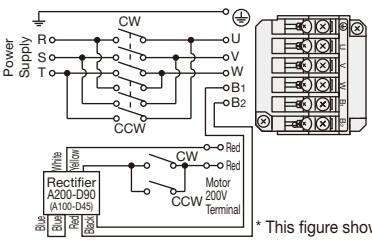 * This figure shows AC switching (A).

-N-: Surge Suppressor (optional)

■ C Type Terminal Box (1-Phase)

Connection	1-Phase		
AC Switching (B)	Standard Voltage / High Voltage (200 V Class)		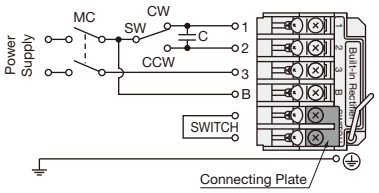
DC Switching	Standard Voltage / High Voltage (200 V Class)		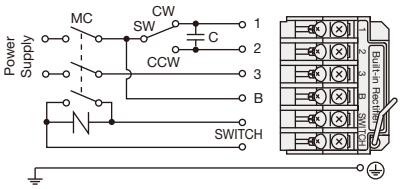
AC Switching (A)	Standard Voltage / High Voltage (200 V Class)		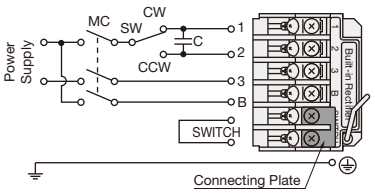

SW: CW/CCW Switch C: Capacitor MC: Magnetic Contactor -N- : Surge Suppressor (optional)

Note 1: Adopt DC switching when using the gearmotor for vertical operation (lifting).
Note 2: For a DC switching connection, connect a surge suppressor (optional) between the contacts. For surge suppressors (optional), refer to page 589.
Note 3: Use switches of 110 VDC with a contact point rating of DC13 to block the inductive load of the DC coil when using DC switching connection.
Please contact us for more details.
* Contact rating class DC13 is a specification applicable to coil loads and a type defined in JIS C 8201-5-1 (Low-voltage switchgear and control gear).
Note 4: Please note that the rectifier contains a diode and will become unusable if it is shorted due to, for example, improper wiring.
Note 5: For connection methods for Three-phase High Voltage(400 V Class) and special voltages exceeding 220 V, connect the separate 200 V terminal (red lead wire) drawn out of the motor to the lead wire (white/yellow) of the rectifier.
The separate 200 V terminal drawn out of the motor cannot be used when using an inverter.
For information and precautions involving the connection for using an inverter, refer to page 591.

MID Series (3-Phase)

■ Gearmotors Connection (Brakemotor)

Connect the wires of a gearmotor with a brake as shown below. The rotational direction of the output shaft by the connection described below is shown in the performance table for each series.

* For more information about the voltage codes, refer to page 599.

* For the wiring diagrams of gearmotors without a brake, refer to page 547.

■ Precautions for Wiring

- Be sure to adopt “DC switching” when using the gearmotor for vertical operations (lifting).
- For a DC switching connection, please connect a surge suppressor (optional) between the contacts. For surge suppressors (optional), refer to page 589.
  (The varistor voltage is 423 V to 517 V in the case of a 200 V class brake or 820 V to 1000 V in the case of a 400 V class brake.)
- The brake voltage is 90 VDC in the case of a 200 V class brake and 180 VDC in the case of a 400 V class brake.
- The brake lead wires are the blue lead wires in the case of a 200 V class brake or the yellow lead wires in the case of a 400 V class brake.
- When adopting a DC switching connection, use a contactor with a contact capacity for 110 VDC <220 VDC> or contact rating class DC13 in order to shut down the inductive load (DC coil). Please contact us for more details.
  * Contact rating class DC13 is a specification applicable to coil loads and a type defined in JIS C 8201-5-1 (Low-voltage switchgear and control gear). * The items in < > are for 400 V class brakes.
- The rectifier contains a diode and will become unusable if it is shorted due to, for example, improper wiring. Please be cautious.
- For information and precautions involving the connection for using an inverter, refer to page 592.

■ Lead Wires: 3 Lead Wires Type

Voltage Codes	NN	WN	EN	MA
Voltage/ Frequency	200 V/50 Hz, 200 V/60 Hz, 220 V/60 Hz	380 V/50 Hz, 400 V/50 Hz 400 V/60 Hz, 440 V/60 Hz	415 V/50 Hz, 440 V/50 Hz 480 V/60 Hz	575 V/60 Hz
AC Switching (B)	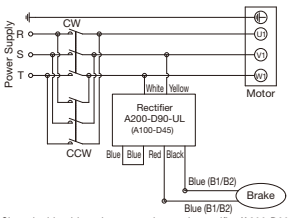 Short the blue-blue wire connection on the rectifier (A200-D90-UL).	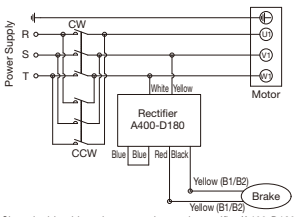 Short the blue-blue wire connection on the rectifier (A400-D180).		
AC Switching (A)	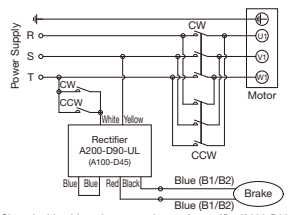 Short the blue-blue wire connection on the rectifier (A200-D90-UL).	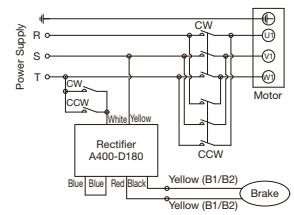 Short the blue-blue wire connection on the rectifier (A400-D180).		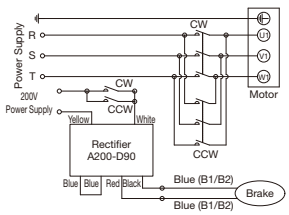 Short the blue-blue wire connection on the rectifier (A200-D90-UL).
DC Switching	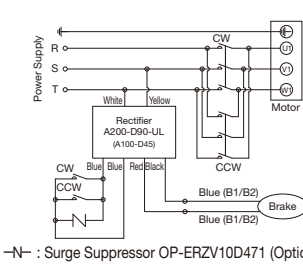 –N– : Surge Suppressor OP-ERZV10D471 (Optional)	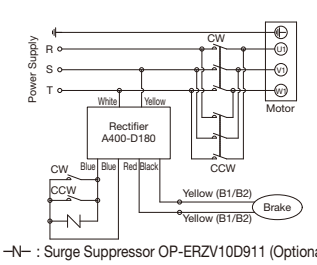 –N– : Surge Suppressor OP-ERZV10D911 (Optional)		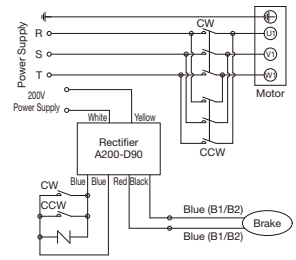 –N– : Surge Suppressor OP-ERZV10D471 (Optional)

Note: Use the included nuts for the connection.

■ Lead Wires: 6 Lead Wires Type

Voltage Codes	KN (Dual Voltage) CN (Dual Voltage) DN (Dual Voltage)	
Voltage/ Frequency	220 V/60 Hz, 220 V/50 Hz, 230 V/50 Hz	380 V/60 Hz, 380 V/50 Hz
AC Switching (B)	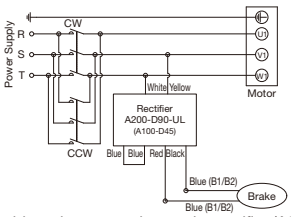 Short the blue-blue wire connection on the rectifier (A200-D90-UL).	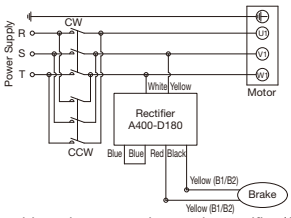 Short the blue-blue wire connection on the rectifier (A400-D180).
AC Switching (A)	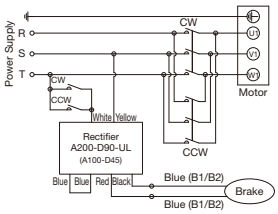 Short the blue-blue wire connection on the rectifier (A200-D90-UL).	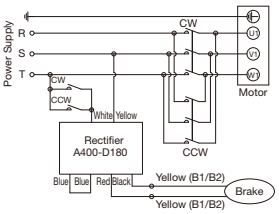 Short the blue-blue wire connection on the rectifier (A400-D180).
DC Switching	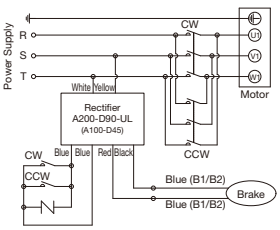 –N– : Surge Suppressor OP-ERZV10D471 (Optional)	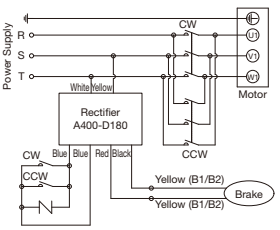 –N– : Surge Suppressor OP-ERZV10D911 (Optional)

Note: Use the included nuts for the connection.
Note: The B1 and B2 terminals are within the terminal box.

■ Lead Wires: 9 Lead Wires Type

Voltage Codes	AN (Dual Voltage) UN (Dual Voltage)	
Voltage/ Frequency	208 V/60 Hz, 230 V/60 Hz	460 V/60 Hz, 400 V/50 Hz
AC Switching (B)	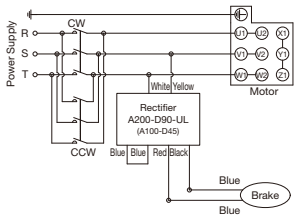 Short the blue-blue wire connection on the rectifier (A200-D90-UL).	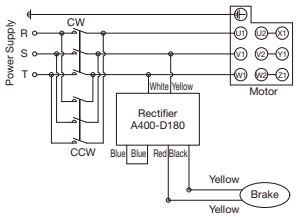 Short the blue-blue wire connection on the rectifier (A400-D180).
AC Switching (A)	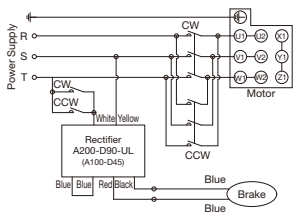 Short the blue-blue wire connection on the rectifier (A200-D90-UL).	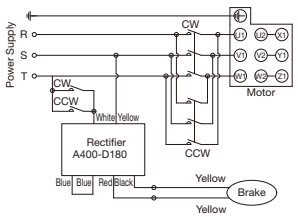 Short the blue-blue wire connection on the rectifier (A400-D180).
DC Switching	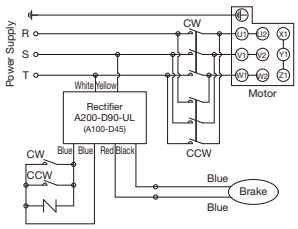 –N– : Surge Suppressor OP-ERZV10D471 (Optional)	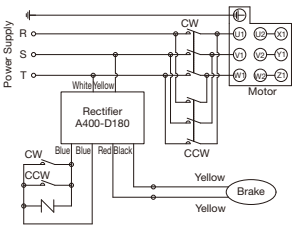 –N– : Surge Suppressor OP-ERZV10D911 (Optional)

Note: Use the included nuts and short board for the connection.
Note: The brake lead wires are drawn into the terminal box, but are not fixed to the terminal block.

MID Series (1-Phase)

■ Precautions for Wiring

- Please utilize DC switching when using the gearmotor for vertical operation (lifting).
- For a DC switching connection, please connect a surge suppressor (optional) between the contacts. For surge suppressors (optional), refer to page 589.
- When adopting a DC switching connection, use a contactor with a contact capacity for 110 VDC or contact rating class DC13 in order to shut down the inductive load (DC coil).
  Please contact us for more details.
  * Contact rating class DC13 is a specification applicable to coil loads and a type defined in JIS C 8201-5-1 (Low-voltage switchgear and control gear).
- Please note that the rectifier contains a diode which will become unusable if it is shorted out due to, for example, improper wiring.

■ Connection Method

	Standard Voltage		High Voltage (200 V Class)	
	Capacitor Run (Note 1) Brake Lead Wires: Blue 0.1 kW (H2, F, F3 Types)	Capacitor Start Brake Lead Wires: Blue 0.1 kW (G3 type), 0.2 kW, 0.4 kW	Capacitor Run (Note 1) Brake Lead Wires: Blue 0.1 kW (H2, F, F3 Types)	Capacitor Start Brake Lead Wires: Blue 0.1 kW (G3 type), 0.2 kW, 0.4 kW
AC Switching (B)	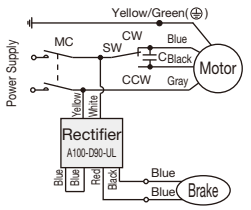 Short the blue-blue wire connection on the rectifier.	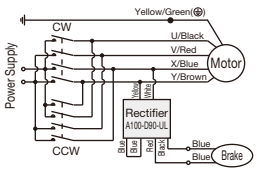 Short the blue-blue wire connection on the rectifier.	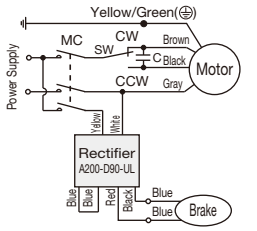 Short the blue-blue wire connection on the rectifier.	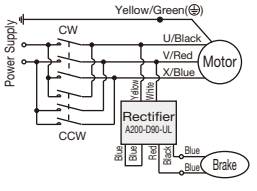 Short the blue-blue wire connection on the rectifier.
DC Switching	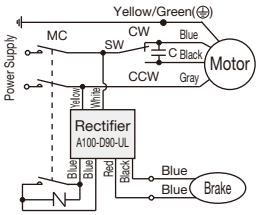	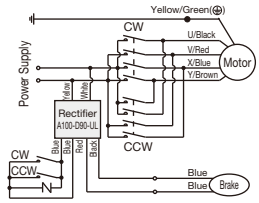	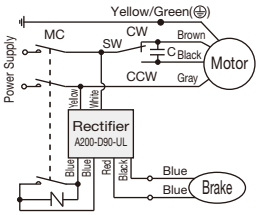	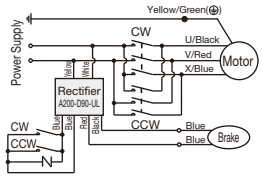
AC Switching (A)	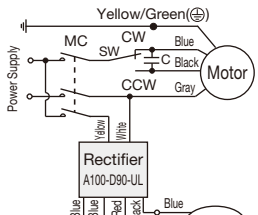 Short the blue-blue wire connection on the rectifier.	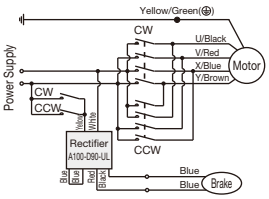 Short the blue-blue wire connection on the rectifier.	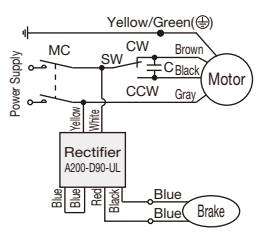 Short the blue-blue wire connection on the rectifier.	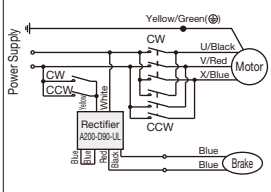 Short the blue-blue wire connection on the rectifier.

SW: CW/CCW Switch C: Capacitor MC: Magnetic Contactor -N- : Surge Suppressor (optional)

Note 1: 1-phase capacitor run type motors have built-in thermal protectors.Refer to page 643 for the cautions for use.

Wiring Diagram of Gearmotors with Clutch/Brake

MID Series (Clutch/Brake)

A DC voltage of 90 V is required to operate the clutch/brake. Connect the wires of the attached rectifier A200-D90 and two surge suppressors for spark quenching (OP-ERZV10D471) according to the connection method described below. For the dimensions of the rectifier, refer to page 589.

■ Precautions for Wiring

- For the protection of the rectifier, install a fuse (capacity: 1 A) on the input or output side of the circuit.
- Please note that the rectifier contains a diode and will become unusable if it is shorted due to, for example, improper wiring.
- With regard to the relay for the clutch/brake circuit, use a contactor with a contact capacity for 110 VDC or contact rating class DC13 in order to shut down the inductive load (DC coil). Please contact us for more details.
  * Contact rating class DC13 is a specification applicable to coil loads and a type defined in JIS C 8201-5-1 (Low-voltage switchgear and control gear).
- The clutch/brake is not available for 400 V.

Standard Voltage

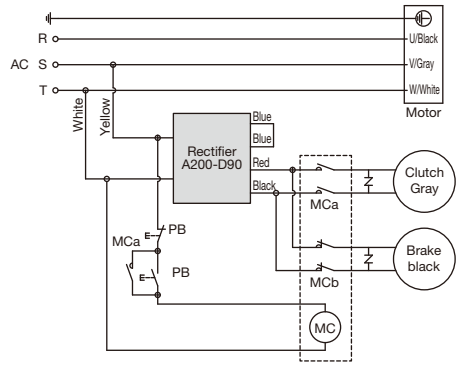

MC: Relay Coil
MCa: Magnetic Contactor a Contact
MCb: Magnetic Contactor b Contact
PB: Pushbutton
-⊬-: Surge Suppressor (Accessory OP-ERZV10D471)

High Voltage (400 V Class)

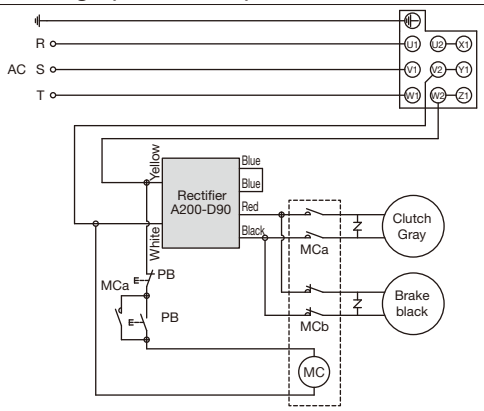

MC: Relay Coil
MCa: Magnetic Contactor a Contact
MCb: Magnetic Contactor b Contact
PB: Pushbutton
-⊬- : Surge Suppressor (Accessory OP-ERZV10D471)

Wiring Diagram of Built-in Rectifier of Gearmotors with Brake

■ Connection Types and Specifications and How to Select of C-Type terminal box

Connection	Specifications and How to Select	Inverter	Lifting Operation	Reduced Wiring	Braking Delay Time
AC Switching (B)	A rectifier is built into the C-Type terminal box, with AC switching (B) connection. This is the simplest method: just connect the power supply line to run the motor. Furthermore, the connection can be changed to DC switching by removing the connecting plate.	× (Unusable)	× (Unusable)	◎	△
DC Switching	This connection method is optimal for applications requiring sudden braking, mainly for lifting operations, since it offers the shortest braking delay time. Remove the connecting plate to use the DC switching connection.	× (Unusable)	◎ (Optimal)	△	◎
AC Switching (A)	*Custom Specifications Although this connection method uses a built-in rectifier, it allows a separate circuit between the motor and the brake, making it optimal for use with inverters/VFDs. In case of a 200 V brakemotor with high voltage, the 200 V terminal is separately drawn out of the motor. However, it is not fixed to the terminal block. When the motor is running with inverter/VFD control, this 200 V terminal cannot be used. Prepare 200 V AC separately for input supply power to the AC terminal. * 3-phase only.	◎ (Optimal)	○ (Usable)	○	○
Separate Rectifier	*Custom Specifications With this connection, the brake lead wires are drawn into and fixed to the terminal block. A rectifier is not built in. Wiring is flexible to meet your specifications, such as placing a rectifier inside of the switchboard. In case of high voltage specifications, the 200 V terminal is separately drawn out of the motor. However, it is not fixed to the terminal block. The separate rectifier needs to be specified at the time of placing an order because it is a custom option item. A rectifier is included with the motor. Please select a connection method from the wiring diagram on page 549 to connect the wires of the rectifier. * 3-phase only.	Depends on the connection method (AC Switching (A), AC Switching (B), DC Switching) of the rectifier in the switchboard.		—	—

Note 1: The braking delay time is the time from the moment of turning off the switch to the start of braking, and is different from the braking time.
For the braking delay times caused by the different connection methods, refer to page 569.
If you require braking time information, refer to the material for calculating braking times on page 530.

Note 2: Please specify “AC Switching (A)” at te time of placing an order if you are going to use an inverter/VFD. Please be noticed that(Custom Specifications) "AC Switching (B)" and "DC Switching" cannot be used with an inverter. For high voltage specifications, the separate 200 V terminal drawn out of the motor cannot be used. For more details, please contact our Sales Office or the CS Center. For precautions about the use of an inverter/VFD, please refer to page 591.

● Rated Currents

The rated current values in the motor characteristics table shows the rated current data for the motor operating without a gearbox. For terminal boxes with a built-in rectifier, the value of the current flowing to the brake must be considered. For more details, please contact our Sales Office or the CS Center.

Wiring Diagram of Built-in Rectifier of Gearmotors with Brake

■ C Type Terminal Box (3-Phase)

Connection	3-Phase		
AC Switching (B)	Standard Voltage / High Voltage (400 V Class)		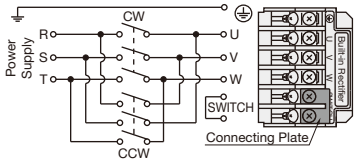
DC Switching	Standard Voltage / High Voltage (400 V Class)		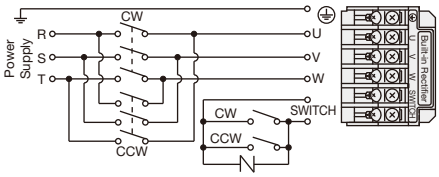
AC Switching (A) Custom Specifications	Standard Voltage		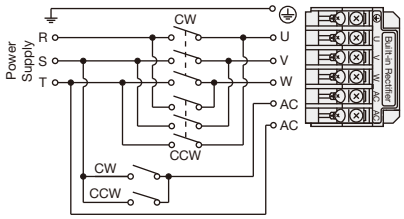
	High Voltage (400 V Class) Motor 200V Terminal		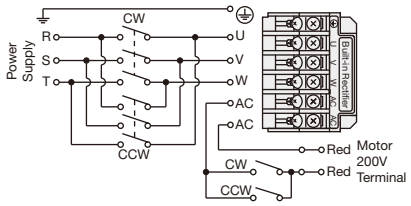
Separate Rectifier Custom Specifications	Standard Voltage	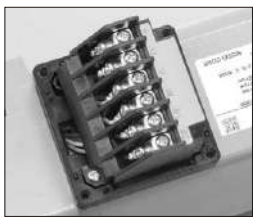	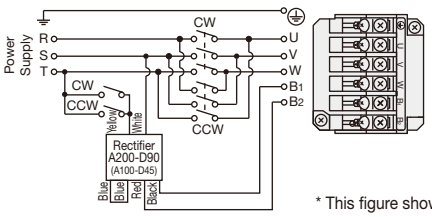 * This figure shows AC switching (A).
	High Voltage (400 V Class) Motor 200V Terminal	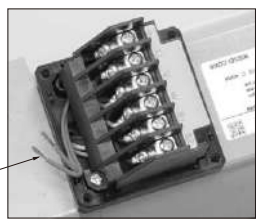	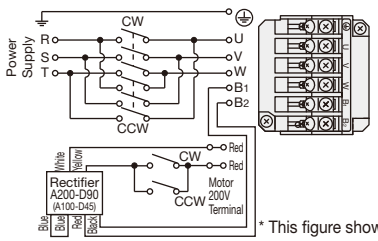 * This figure shows AC switching (A).

-N-: Surge Suppressor (optional)

■ C Type Terminal Box (1-Phase)

Connection	1-Phase		
AC Switching (B)	Standard Voltage / High Voltage (200 V Class)		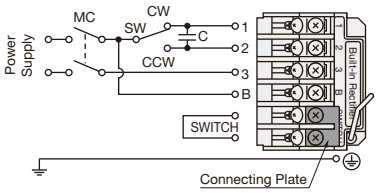
DC Switching	Standard Voltage / High Voltage (200 V Class)		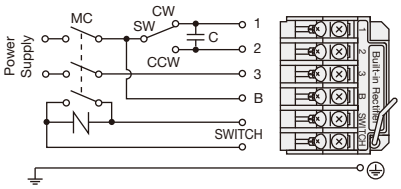
AC Switching (A)	Standard Voltage / High Voltage (200 V Class)		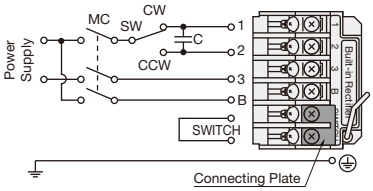

SW: CW/CCW Switch C: Capacitor MC: Magnetic Contactor -N- : Surge Suppressor (optional)

Note 1: Adopt DC switching when using the gearmotor for vertical operation (lifting).
Note 2: For a DC switching connection, connect a surge suppressor (optional) between the contacts. For surge suppressors (optional), refer to page 589.
Note 3: Use switches of 110 VDC with a contact point rating of DC13 to block the inductive load of the DC coil when using DC switching connection.
Please contact us for more details.
* Contact rating class DC13 is a specification applicable to coil loads and a type defined in JIS C 8201-5-1 (Low-voltage switchgear and control gear).
Note 4: Please note that the rectifier contains a diode and will become unusable if it is shorted due to, for example, improper wiring.
Note 5: For connection methods for Three-phase High Voltage(400 V Class) and special voltages exceeding 220 V, connect the separate 200 V terminal (red lead wire) drawn out of the motor to the lead wire (white/yellow) of the rectifier.
The separate 200 V terminal drawn out of the motor cannot be used when using an inverter.
For information and precautions involving the connection for using an inverter, refer to page 591.

Wiring Diagram of Built-in Rectifier of Gearmotors with Brake

MID Series (3-Phase)

■ Built-in Rectifier

A rectifer can be installed and pre-wired within the terminal box of the product upon request. Please feel free to request when placing an order. For the purchasing codes of each connection type, please refer to the table below.

■ Target Products

- Standard Voltage / High Voltage (400 V Class)
- Special Voltage * However, power supply code M (575 V/60 Hz) is not supported.

● T-Type terminal box (steel plate) ● E-Type terminal box (aluminum)

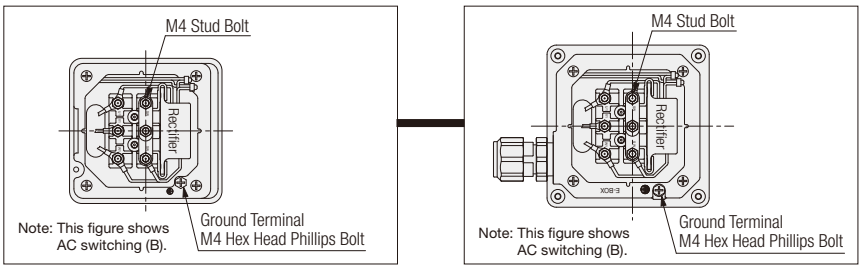

Note: For the connections, refer to page 562.
.For the option code for each brake connection for a built-in rectifier, refer to the description below.

Standard terminal boxes for gearmotors with a brake are provided with a rectifier separately.
If you desire a built-in rectifier, we may wire the rectifier for you. You may instruct the connection according to the following procedure:

Type Type Code for Ordering (Example) (Use this code to specify the connection.)	
AC Switching B (AC Switching B)	AB
AC Switching A (AC Switching A)	AA
DC Switching (DC Switching)	DC

The option code for brake connection will be indicated in the option code slot on the nameplate.

■ Description of Type Codes

X AA

Option Code for Brake Connection
(AA indicates AC switching (A) for the brake connection.)

Option (X)

Connection	Connection Types and Specifications and How to Select	Inverter Operation	Lifting Operation	Reduced Wiring	Braking Delay Time	Ordering Code
AC Switching (B)	This is the simplest method with a built-in rectifier, and the motor can run simply by connecting the power supply line. Moreover, a DC switching connection is also possible by removing the connection plate.	× (Unusable)	× (Unusable)	◎	△	AB
AC Switching (A)	Although this connection method uses a built-in rectifier, it allows a separate circuit between the motor and the brake. Making it optimal for use with inverters.	◎ (Optimal)	○ (Usable)	○	○	AA
DC Switching	This connection method is optimal for applications requiring sudden braking, mainly for lifting operation, since it offers the shortest braking delay time.	× (Unusable)	◎ (Optimal)	△	◎	DC

Note: Add the ordering code to the end of the part number. Example: G3L28N15-MR08TNNTB2X AB (When using AC switching (B))

Note 1: The braking delay time is the time from the moment of turning off the switch to the start of braking, and is different from the braking time.
For the braking delay times by different connection methods, refer to page 569.
.If you require braking time information, refer to the material for calculating braking times on page 530.

Note 2: When using an inverter, be sure to instruct under “AC switching (A)” at the time of placing an order. Please note that “AC switching (B)” and “DC Switching” cannot be used with an inverter. In addition, for precautions about the use of an inverter, refer to page 591.

■ Rated Currents

The motor performance tables on pages 622 to 625 show the rated current of the motor alone. When a rectifier is built into the terminal box, the value of the current flowing to the brake must be considered. For more details, please contact your nearest Sales Office or the CS Center.

■ Precautions for Wiring

- The SW terminal or AC terminal are within the terminal box.
- Be sure to adopt “DC switching” when using the gearmotor for vertical operations (lifting).
- For a DC switching connection, please connect a surge suppressor (optional) between the contacts. For surge suppressors (optional), refer to page 589.
  (The varistor voltage is 423 V to 517 V in the case of a 200 V class brake or 820 V to 1000 V in the case of a 400 V class brake.)
- The brake voltage is 90 VDC in the case of a 200 V class brake and 180 VDC in the case of a 400 V class brake.
- The brake lead wires are the blue for 200 V class brake and yellow for 400 V class brake. The connection terminals on the terminal block are B1 and B2.
- When adopting a DC switching connection, use a contactor with a contact capacity for 110 VDC <220 VDC> or contact rating class DC13 in order to shut down the inductive load (DC coil). Please contact us for more details.
  * Contact rating class DC13 is a specification applicable to coil loads and a type defined in JIS C 8201-5-1 (Low-voltage switchgear and control gear).
  * The items in < > are for 400 V class brakes.
- The rectifier contains a diode and will become unusable if it is shorted due to, for example, improper wiring. Please be cautious
- For information and precautions involving the connection for using an inverter, refer to page 591.
- Please note that the power supply that can be used for type codes (supply voltage) “K”, “C”, “D”, “U” and “A”, (types that show both 200 V class and 400 V class voltages on the nameplate) is different depending on the brake voltage type. Gearmotors with a 200 V class brake (brake part number B2, J2, or V2: blue lead wires) can also be operated with 200 V class voltage.They cannot be operated with 400 V class voltage.
  Gearmotors with a 400 V class brake (brake part number B4, J4, or V4: yellow lead wires) can also be operated with 400 V class voltage.They cannot be operated with 200 V class voltage.class voltage. It cannot be operated with a 200 V class voltage.

■ Types and Connection Methods

Connection	3-Phase: 200 V Class/400 V Class
AC Switching (B)	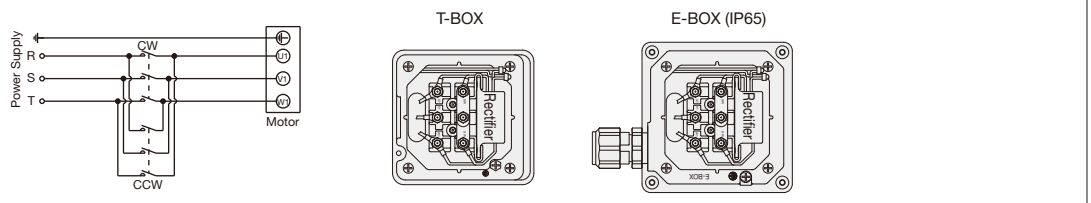 Note: The rectifier models are “A200-D90-UL” for the 200 V class and “A400-D180” for the 400 V class.
AC Switching (A)	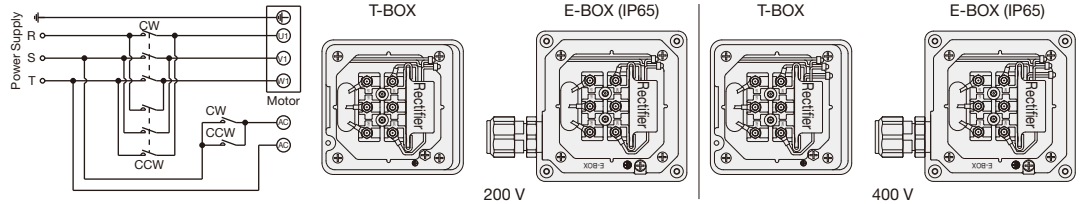 Note: The rectifier models are “A200-D90-UL” for the 200 V class and “A400-D180” for the 400 V class.
DC Switching	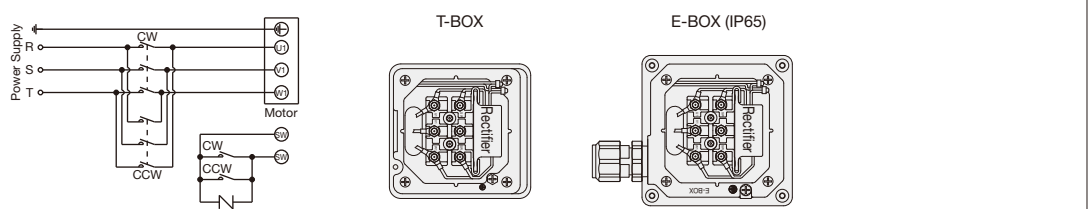 Note: The rectifier models are “A200-D90-UL” for the 200 V class and “A400-D180” for the 400 V class.

-N-: Surge Suppressor (optional)

MEMO

Wiring Diagram of IP65 Gearmotors with Brake

MINI Series

Lead Wires and Connections

Note: For more information about brakemotor, refer to page 565.

● 3-Phase Motor

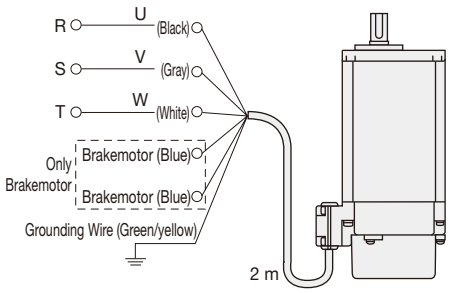

The rotational direction will be reversed by switching two of the U, V, and W wires.

● 1-Phase Motor

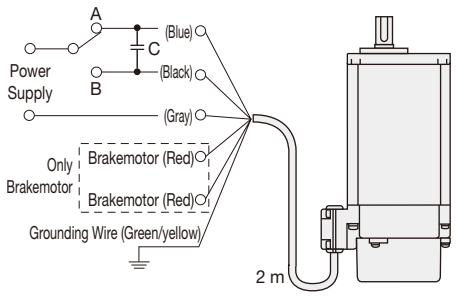

To reverse the rotational direction, switch A and B.

C: Capacitor

Note 1: A voltage that is almost double the motor supply voltage is applied between both terminals of the capacitor for Single-Phase motor. To ensure safety, please be sure to insulate the terminals.
Note 2: When stripping the sheath of the cabtyre cable, take care not to damage the wire inside.
Note 3: Please note that the cable is not a flexible cable (robot cable).
Note 4: When using the motor in a place where it will be exposed to water during operation, it is recommended to use an electrical leakage breaker to ensure safety.

■ Capacitor

A capacitor is absolutely required for the operation of a Single-phase motor. Upon use, please connect the included capacitor to the product.

All Single-phase motors are connected by a reversible connection (three lead wires) and can therefore run in the CW and CCW directions as Three-phase motors do.

For the capacity of the capacitor, refer to the performance table. For the shape and dimensions of the capacitor, refer to page 546.

Wiring Diagram of IP65 Gearmotors with Brake

Connection Types and How to Select

Connection	How to Select	Inverter	Lifting Operation	Reduced Wiring	Braking Delay Time
(1) AC Switching (B)	This is the simplest method, and the motor can run simply by connecting the power supply line. This connection method requires fewer wires.	× (Unusable)	× (Unusable)	◎	△
(2) DC Switching	This connection method is optimal for applications requiring sudden braking, mainly for lifting operation, since it offers the shortest braking delay time.	○ (Usable)	◎ (Optimal)	△	◎
(3) AC Switching (A)	This connection method can separate the circuit between the motor and the brake and is optimal for driving with an inverter.	◎ (Optimal)	○ (Usable)	○	○

Note: The braking delay time is the time from the moment of turning off the switch to the start of braking, and is different from the braking time.
For the braking delay times caused by the different connection methods, refer to [Table-1] on page 569.
.If you require braking time information, refer to the material for calculating braking times on page 530.

MINI Series

■ Precautions for Wiring

- Please utilize DC switching when using the gearmotor for vertical operation (lifting).
- For a DC switching connection, please connect a surge suppressor (optional) between the contacts. For surge suppressors (optional), refer to page 589.
- In the case of a Single-phase 100 V gearmotor, the input voltage of rectifier A200-D90 (A100-D45) is 100 VAC, and the output voltage is 45 VDC.
- Use switches of 110 VDC with a contact point rating of DC13 to block the inductive load of the DC coil when using DC switching connection.
  For more details, please contact your nearest Sales Office or the CS Center.
  When using noncontact relays, use ones equivalent to a rated voltage of 240 VAC (a half-wave rectification load can open and close).
  * Contact rating class DC13 is a specification applicable to coil loads and a type defined in JIS C 8201-5-1 (Low-voltage switchgear and control gear).
- Please note that the rectifier contains a diode which will become unusable if it is shorted out due to, for example, improper wiring.
- For information and precautions involving the connection for using an inverter, refer to page 591.

Connection	3-phase 15 W to 90 W	1-phase 15 W to 90 W
(1) AC Switching (B)	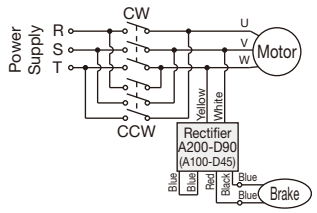 Short the blue-blue wire connection on the rectifier.	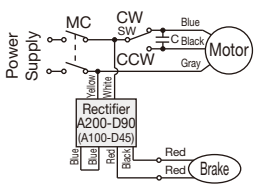 Short the blue-blue wire connection on the rectifier.
(2) DC Switching	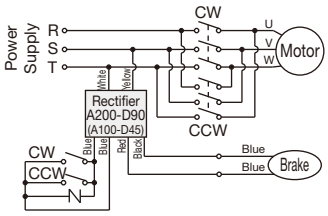 Short the blue-blue wire connection on the rectifier.	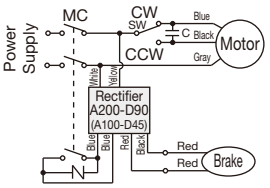 Short the blue-blue wire connection on the rectifier.
(3) AC Switching (A)	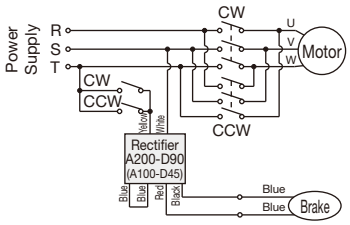 Short the blue-blue wire connection on the rectifier.	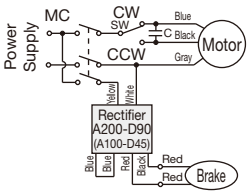 Short the blue-blue wire connection on the rectifier.

SW: CW/CCW Switch C: Capacitor MC: Magnetic Contactor -N- : Surge Suppressor (optional)

MID Series (3-Phase)

■ Gearmotors Connection (Brakemotors)

Connect the wires of a gearmotor with a brake as shown below. The rotational direction of the output shaft by the connection described below is shown in the performance table for each series.

* For more information about the voltage codes, refer to page 599.
* For the wiring diagrams of gearmotors without a brake, refer to page 547.

■ Precautions for Wiring

- Be sure to adopt “DC switching” when using the gearmotor for vertical operations (lifting).
- For a DC switching connection, please connect a surge suppressor (optional) between the contacts. For surge suppressors (optional), refer to page 589. (The varistor voltage is 423 V to 517 V in the case of a 200 V class brake or 820 V to 1000 V in the case of a 400 V class brake.)
- The brake voltage is 90 VDC in the case of a 200 V class brake and 180 VDC in the case of a 400 V class brake.
- The brake lead wires are the blue lead wires in the case of a 200 V class brake or the yellow lead wires in the case of a 400 V class brake.
- When adopting a DC switching connection, use a contactor with a contact capacity for 110 VDC <220 VDC> or contact rating class DC13 in order to shut down the inductive load (DC coil).
  Please contact us for more details.
  * Contact rating class DC13 is a specification applicable to coil loads and a type defined in JIS C 8201-5-1 (Low-voltage switchgear and control gear). * The items in < > are for 400 V class brakes.
- The rectifier contains a diode and will become unusable if it is shorted due to, for example, improper wiring. Please be cautious.
- For information and precautions involving the connection for using an inverter, refer to page 591.
- Please note that the power supply that can be used for type codes (supply voltage) “K”, “C”, “D”, “A” and “U”, (types that show both 200 V class and 400 V class voltages on the motor nameplate) is different depending on the brake voltage type. Gearmotors with a 200 V class brake (brake part number B2, J2, or V2: blue lead wires) can also be operated with 200 V class voltage.They cannot be operated with 400 V class voltage.
  Gearmotors with a 400 V class brake (brake part number B4, J4, or V4: yellow lead wires) can also be operated with 400 V class voltage.They cannot be operated with 200 V class voltage.

■ Lead Wires: 3 Lead Wires Type

Voltage Codes	NN	WN	EN	MA
Voltage/ Frequency	200 V/50 Hz, 200 V/60 Hz, 220 V/60 Hz	380 V/50 Hz, 400 V/50 Hz 400 V/60 Hz, 440 V/60 Hz	415 V/50 Hz, 440 V/50 Hz 480 V/60 Hz	575 V/60 Hz
AC Switching (B)	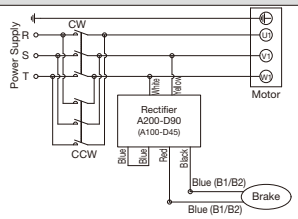 Short the blue-blue wire connection on the rectifier (A200-D90-UL).	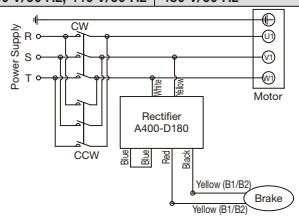 Short the blue-blue wire connection on the rectifier (A400-D180).		
AC Switching (A)	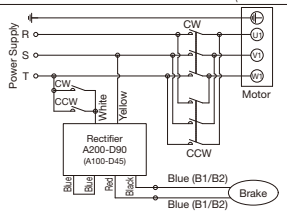 Short the blue-blue wire connection on the rectifier (A200-D90-UL).	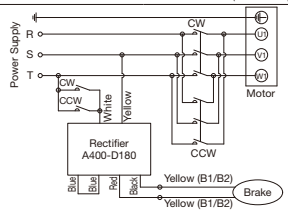 Short the blue-blue wire connection on the rectifier (A400-D180).		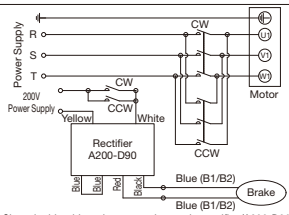 Short the blue-blue wire connection on the rectifier (A200-D90-UL).
DC Switching	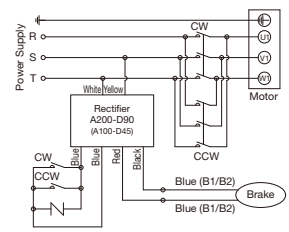 –N– : Surge Suppressor OP-ERZV10D471 (Optional)	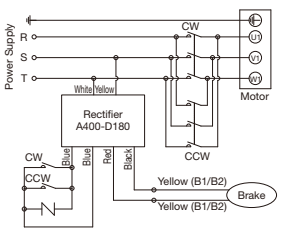 –N– : Surge Suppressor OP-ERZV10D911 (Optional)		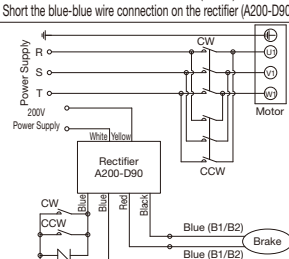 –N– : Surge Suppressor OP-ERZV10D471 (Optional)

Note: Use the included nuts for the connection.

■ Lead Wires: 6 Lead Wires Type

Voltage Codes	KN (Dual Voltage) CN (Dual Voltage) DN (Dual Voltage)	
Voltage/ Frequency	220 V/60 Hz, 220 V/50 Hz, 230 V/50 Hz	380 V/60 Hz, 380 V/50 Hz
AC Switching (B)	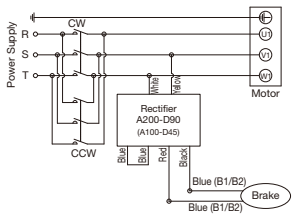 Short the blue-blue wire connection on the rectifier (A200-D90-UL).	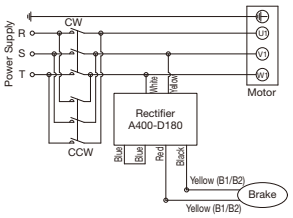 Short the blue-blue wire connection on the rectifier (A400-D180).
AC Switching (A)	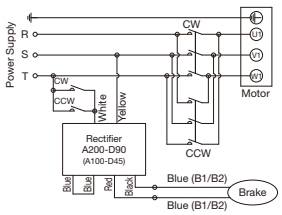 Short the blue-blue wire connection on the rectifier (A200-D90-UL).	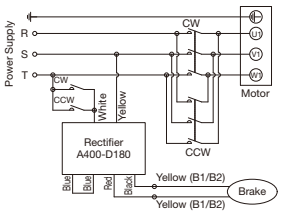 Short the blue-blue wire connection on the rectifier (A400-D180).
DC Switching	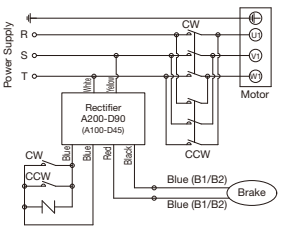 ⊣N⊢ : Surge Suppressor OP-ERZV10D471 (Optional)	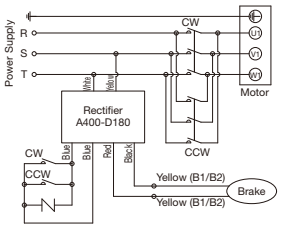 ⊣N⊢ : Surge Suppressor OP-ERZV10D911 (Optional)

Note: Use the included nuts for the connection.
Note: The B1 and B2 terminals are within the terminal box.

■ Lead Wires: 9 Lead Wires Type

Voltage Codes	AN (Dual Voltage) UN (Dual Voltage)	
Voltage/ Frequency	208 V/60 Hz, 230 V/60 Hz	460 V/60 Hz, 400 V/50 Hz
AC Switching (B)	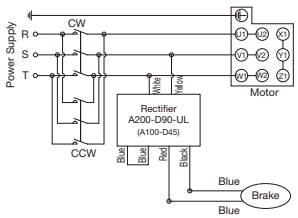 Short the blue-blue wire connection on the rectifier (A200-D90-UL).	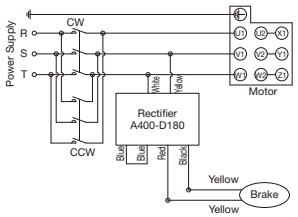 Short the blue-blue wire connection on the rectifier (A400-D180).
AC Switching (A)	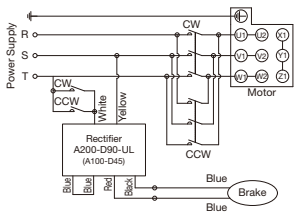 Short the blue-blue wire connection on the rectifier (A200-D90-UL).	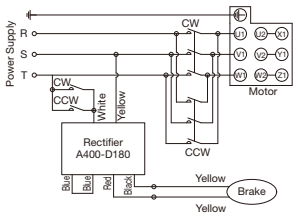 Short the blue-blue wire connection on the rectifier (A400-D180).
DC Switching	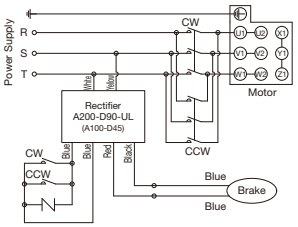 –N– : Surge Suppressor OP-ERZV10D471 (Optional)	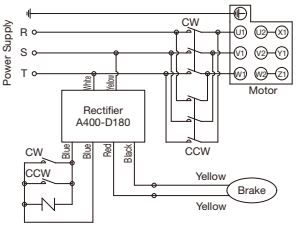 –N– : Surge Suppressor OP-ERZV10D911 (Optional)

Note: Use the included nuts and short board for the connection.
Note: The brake lead wires are drawn into the terminal box, but are not fixed to the terminal block.

Braking Delay Time: ta

The length of time (in seconds) it takes for the brake to activate after the motor is turned off.
(different from the braking time.)

■ Standard Motor

[Table-1]

Series	Number of Phases	Motor Power	DC Switching	AC Switching (A)	AC Switching (B)
MINI	3-Phase	15 W to 90 W	0.005 to 0.015	0.03 to 0.10	0.1 to 0.2
	1-Phase				
MID	3-Phase	0.1 kW to 0.75 kW	0.005 to 0.020	0.05 to 0.15	0.15 to 0.25
		1.5 kW to 2.2 kW	0.015 to 0.030	0.15 to 0.30	0.5 to 0.6
	1-Phase	0.1 kW to 0.2 kW	0.005 to 0.015	0.03 to 0.10	0.1 to 0.2
		0.4 kW	0.005 to 0.015	0.08 to 0.20	0.2 to 0.4

■ IP65 Motor

[Table-2]

Series	Number of Phases	Motor Power	DC Switching	AC Switching (A)	AC Switching (B)
MINI	3-Phase	15 W to 90 W	0.01 to 0.02	0.05 to 0.15	0.1 to 0.2
	1-Phase				
MID	3-Phase	0.1 kW to 0.75 kW	0.005 to 0.015	0.03 to 0.13	0.1 to 0.3

Terminal Box

A terminal box can be mounted. If required, please inform us when placing an order.

Standard Gearmotors

MINI Series

■ T Type Terminal Box

3-Phase 200 V and 400 V/1-Phase 100 V and 200 V

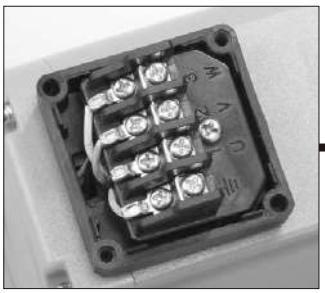

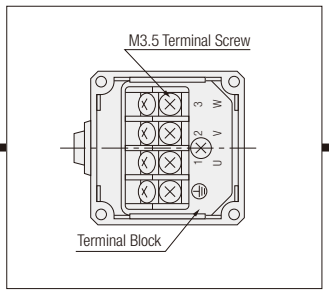

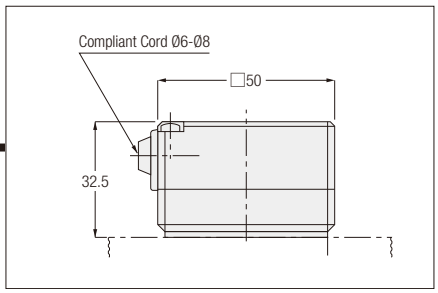

■ K Type Terminal Box

3-Phase 200 V and 400 V/1-Phase 100 V and 200 V

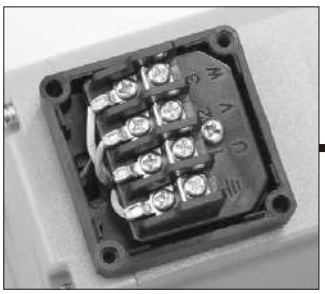

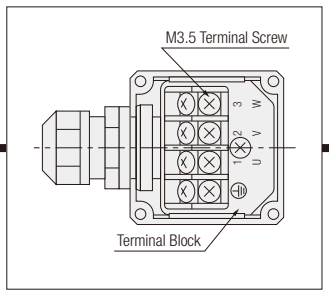

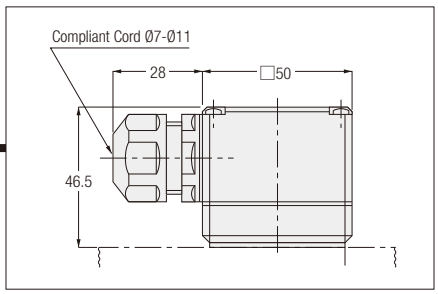

Note: A cable gland will be shipped in the product packaging. Attach the cable gland to the terminal box yourself.

MID Series (3-Phase)

■ Lead Wires: 3 Lead Wires Type

Terminal Box Details and Demensions

T Type Terminal Box Standard (Steel)

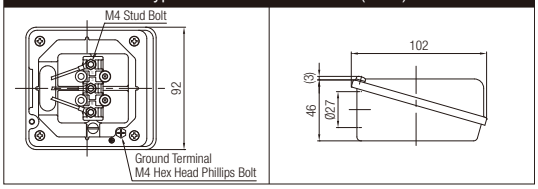

■ Lead Wires: 6 Lead Wires Type

Terminal Box Details and Demensions

T Type Terminal Box Standard (Steel)

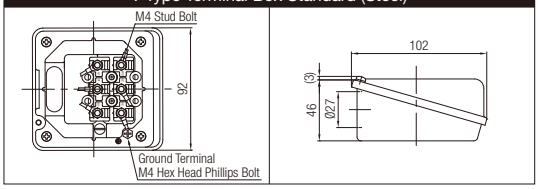

■ Lead Wires: 9 Lead Wires Type

Terminal Box Details and Demensions

T Type Terminal Box Standard (Steel)

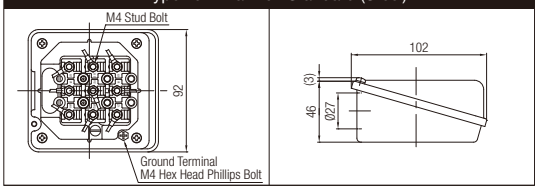

MID Series (1-Phase)

■ A Type Terminal Box (Aluminum)

1-Phase/Standard Voltage and High Voltage (200 V Class): 0.1 kW to 0.4 kW

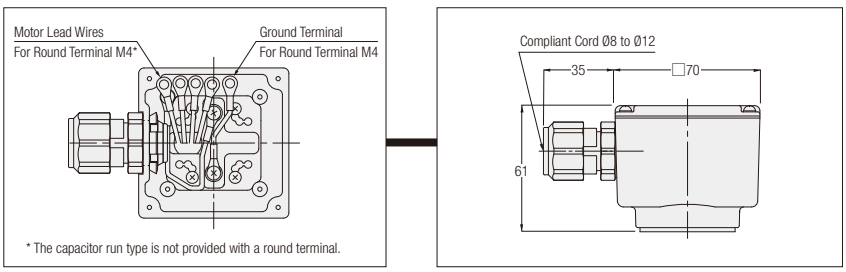

Note: The figure is a representative figure, and the shape of the terminals may differ.

Gearmotors with Brake

MINI Series

■ T Type Terminal Box

3-Phase 200 V and 400 V/1-Phase 100 V and 200 V

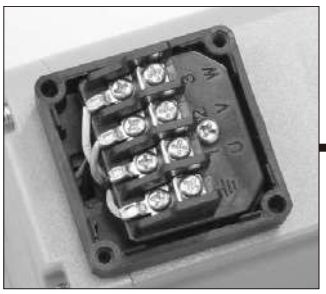

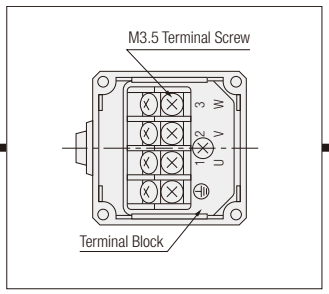

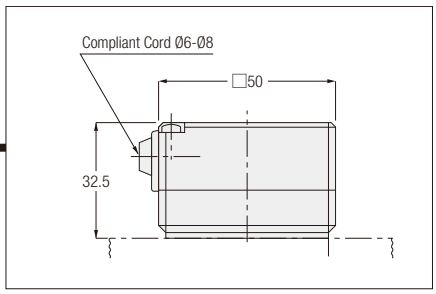

■ K Type Terminal Box

3-Phase 200 V and 400 V/1-Phase 100 V and 200 V

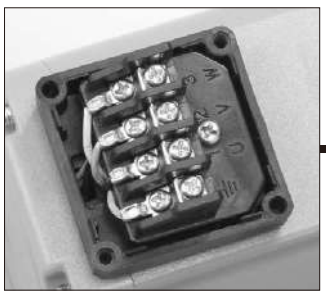

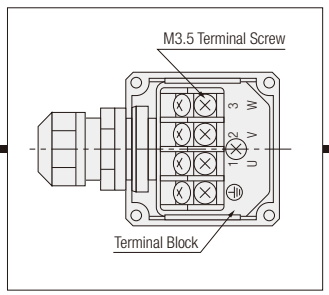

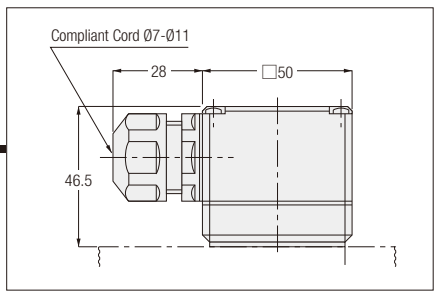

■ C Type Terminal Box (With Built-in Rectifier)

3-Phase 200 V and 400 V



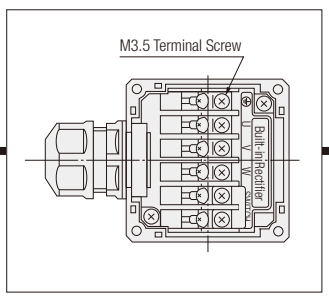

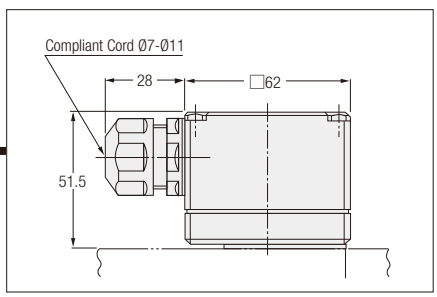

1-Phase 100 V and 200 V



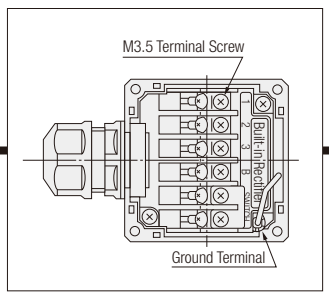

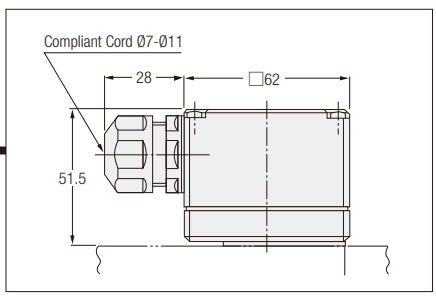

MID Series (3-Phase)

■ Terminal Box Structure and Outline Dimensions (Brakemotor)

The brake lead wires are drawn into the terminal box. The rectifier is not built in.
A rectifier can be contained in the switchboard or wired according to your specifications. A rectifier is included with the motor. Please select a connection method from the wiring diagram on pages 553 to 555 to connect the wires of the rectifier.

Gearmotor with Brake Terminal Box Details and Dimensions	
Type Codes (Supply Voltage) N, W, K, C, E, M	Type Code (Supply Voltage) A
T Type Terminal Box Standard (Steel)	T Type Terminal Box Standard (Steel)
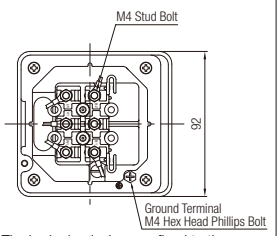 The brake lead wires are fixed to the terminal block (B1/B2).	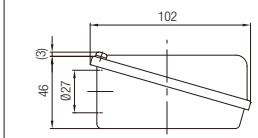
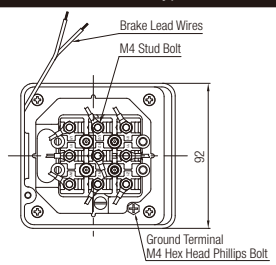 The brake lead wires are not fixed to the terminal block.	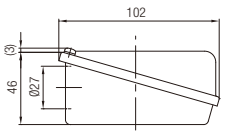

Note: For more information about the type codes (supply voltage), refer to page 599.

Note: When the type code (supply voltage) is “K” or “C,” please note that the available power supply is different depending on the brake voltage type.
A gearmotor with a 200 V class brake (brake model B2, J2, or V2: blue lead wires) can also be used with a 200 V class voltage. It cannot be operated with a 400 V class voltage.
A gearmotor with a 400 V class brake (brake model B4, J4, or V4: yellow lead wires) can also be used with a 400 V class voltage. It cannot be operated with a 200 V class voltage.

MID Series (1-Phase)

■ A Type Terminal Box (Aluminum)

1-Phase/Standard Voltage and High Voltage (200 V Class): 0.1 kW to 0.4 kW

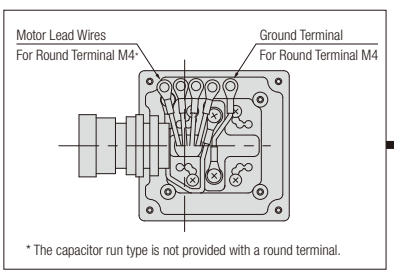

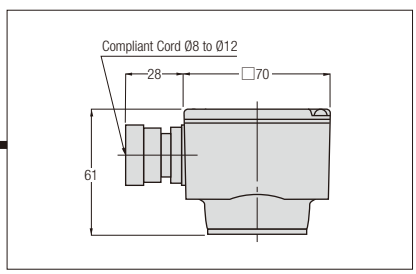

Note: The figure is a representative figure, and the shape of the terminals may differ.

MID Series (Clutch/Brake)

■ T Type Terminal Box (Steel Plate)

3-Phase/Standard Voltage: 0.1 kW to 0.75 kW

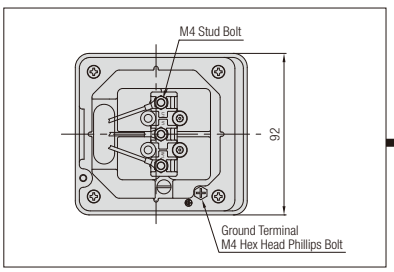

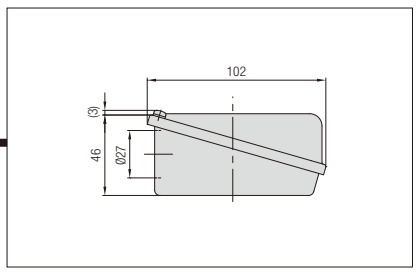

3-Phase/High Voltage (400 V Class): 0.1 kW to 0.75 kW

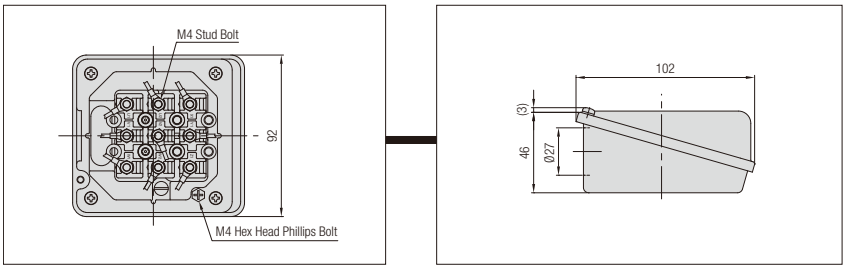

IP65 Gearmotors with Brake

MID Series

■ Terminal Box Structure and Outline Dimensions (Brakemotor)

The brake lead wires are drawn into the terminal box. The rectifier is not built in.
A rectifier can be contained in the switchboard or wired according to your specifications. A rectifier is included with the motor. Please select a connection method from the wiring diagram on pages 566 to 568 to connect the wires of the rectifier.

Gearmotor with Brake Terminal Box Details and Dimensions	
Type Codes (Supply Voltage) N, W, K, C, D, E, M	Type Code (Supply Voltage) A, U
E Type Terminal Box IP65 (Aluminum)	E Type Terminal Box IP65 (Aluminum)
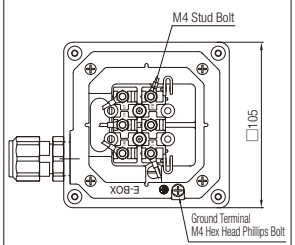 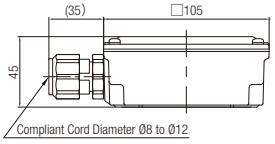 The brake lead wires are fixed to the terminal block (B1/B2).	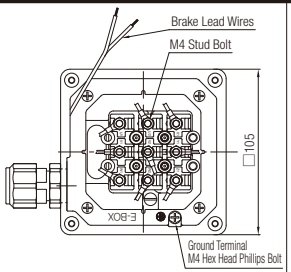 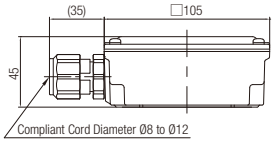 The brake lead wires are not fixed to the terminal block.

Note: For more information about the type codes (supply voltage), refer to page 599.

Note 1: When the type code (supply voltage) is “K”,“C”,“D”,“A”, or “U”, please note that the available power supply is different depending on the brake voltage type.
A gearmotor with a 200 V class brake (brake model B2, J2, or V2: blue lead wires) can also be used with a 200 V class voltage.
It cannot be operated with a 400 V class voltage.
A gearmotor with a 400 V class brake (brake model B4, J4, or V4: yellow lead wires) can also be used with a 400 V class voltage.
It cannot be operated with a 200 V class voltage.

Terminal Box Dimensions and Positions

MINI Series

Standard gearmotors are not provided with a terminal box.
A terminal box can be mounted if required. Please inform us when placing an order.

■ T Type Terminal Box

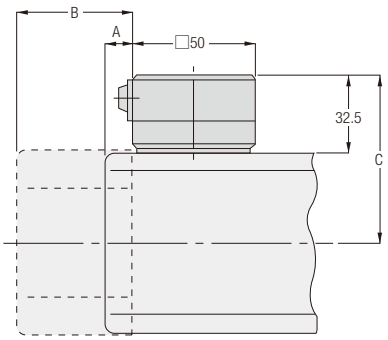

Type	Frame Size	A	B	C
G	12, 22	11.5	49.5	70.5
H	15, 22			
F2 (F2S)	12			
F2 (F2F)	15			
G	15, 28, 32	11.5	48	77.5
H	18, 28, 32			
F2 (F2S)	15			
F2 (F2F)	18			
G	18, 40	11.5	48.5	85.5
H	40			

Note 1: The A Type is not provided with a fan. The dimensions of the B Type are those of a gearmotor with a fan.

■ K Type Terminal Box

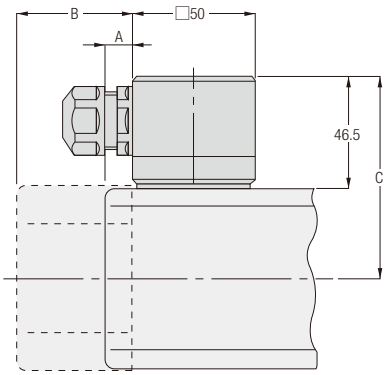

Type	Frame Size	A	B	C
G	12, 22	11.5	49.5	84.5
H	15, 22			
F2 (F2S)	12			
F2 (F2F)	15			
G	15, 28, 32	11.5	48	91.5
H	18, 28, 32			
F2 (F2S)	15			
F2 (F2F)	18			
G	18, 40	11.5	48.5	99.5
H	40			

Note 1: The A Type is not provided with a fan. The dimensions of the B Type are those of a gearmotor with a fan.

■ C Type Terminal Box (Only Gearmotors with Brake)

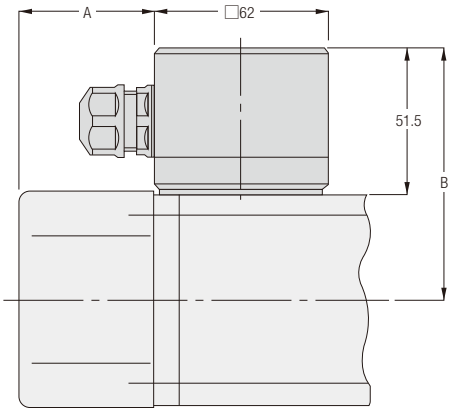

Type	Frame Size	A	B
G	12, 22	49.5	89.5
H	15, 22		
F2 (F2S)	12		
F2 (F2F)	15		
G	15, 28, 32	48	96.5
H	18, 28, 32		
F2 (F2S)	15		
F2 (F2F)	18		
G	18, 40	48.5	104.5
H	40		

MID Series (3-Phase) <G3 Type, GA Type, H2 Type>

A terminal box is provided as a standard item.

Common to G3, GA and H2

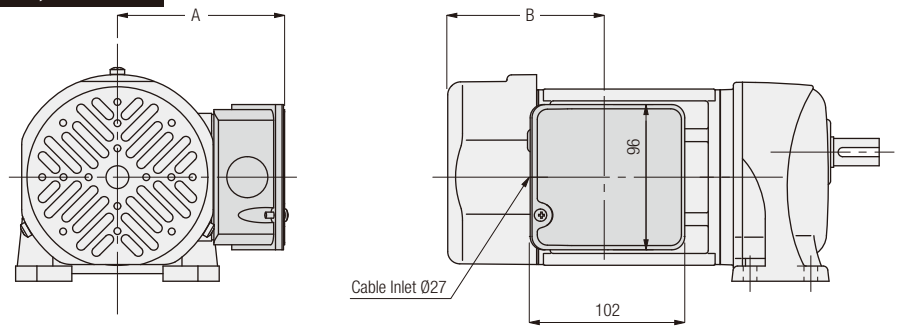

Motor Power	Box Type	Common through all Series			Positional Change of the Terminal Box
		A	B		
			Non-Brake	Brakemotor	
0.1 kW	T	110	52.5	92.5	90 ° Division
0.2 kW	T	110	52.5	103	90 ° Division
0.4 kW	T	117	85.5	105.5	90 ° Division
0.75 kW	T	128	96.5	115.5	90 ° Division
1.5 kW	T	139	108.5	137.5	90 ° Division
2.2 kW	T	149	109	138	90 ° Division

Note 1: The figure above illustrates the standard position of the terminal box. If you want to change the position of the terminal box, please inform us when placing an order. Refer to page 582.
Note 2: The figure is a representative figure, and the shape of the motor may differ.
Note 3: The GA type is available only for 0.4 kW to 2.2 kW.

Common to G3, GA and H2 (water-resistant specification)

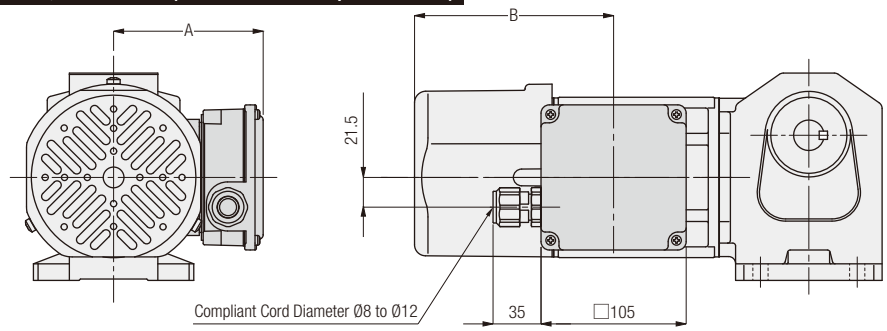

Motor Power	Box Type	Common through all Series			Positional Change of the Terminal Box
		A	B		
			Non-Brake	Brakemotor	
0.1 kW	E	108.5	53.5	115	90 ° Division
0.2 kW	E	108.5	53.5	144	90 ° Division
0.4 kW	E	115.5	85.5	146.5	90 ° Division
0.75 kW	E	126.5	96.5	155.5	90 ° Division
1.5 kW	E	137.5	108.5	–	90 ° Division
2.2 kW	E	147.5	109	–	90 ° Division

Note 1: The figure above illustrates the standard position of the terminal box. If you want to change the position of the terminal box, please inform us when placing an order. Refer to page 582.
Note 2: The figure is a representative figure, and the shape of the motor may differ.
Note 3: The GA type is available only for 0.4 kW to 2.2 kW.

MID Series (3-Phase) <F Type, FA Type, F3 Type>

A terminal box is provided as a standard item.

Common to F, FA and F3

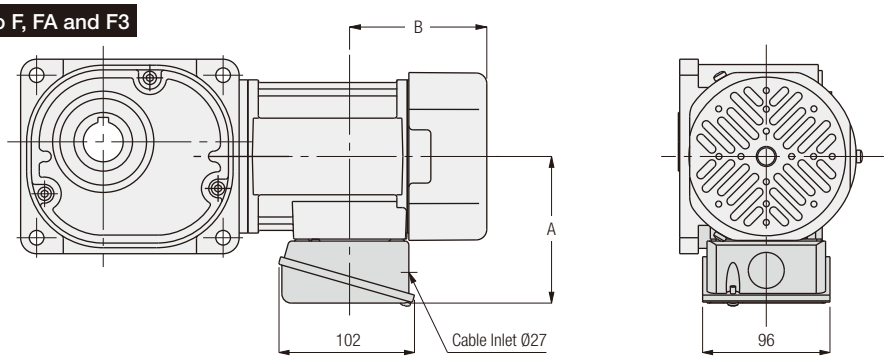

Motor Power	Box Type	Common through all Series			Positional Change of the Terminal Box
		A	B		
			Non-Brake	Brakemotor	
0.1 kW	T	110	52.5	92.5	90 ° Division
0.2 kW	T	110	52.5	103	90 ° Division
0.4 kW	T	117	85.5	105.5	90 ° Division
0.75 kW	T	128	96.5	115.5	90 ° Division
1.5 kW	T	139	108.5	137.5	90 ° Division
2.2 kW	T	149	109	138	90 ° Division

Note 1: The figure above illustrates the standard position of the terminal box. If you want to change the position of the terminal box, please inform us when placing an order. Refer to page 583.
Note 2: The figure is a representative figure, and the shape of the motor may differ.
Note 3: The FA type is available only for 0.4 kW to 2.2 kW.

Common to F, FA and F3 (water-resistant specification)

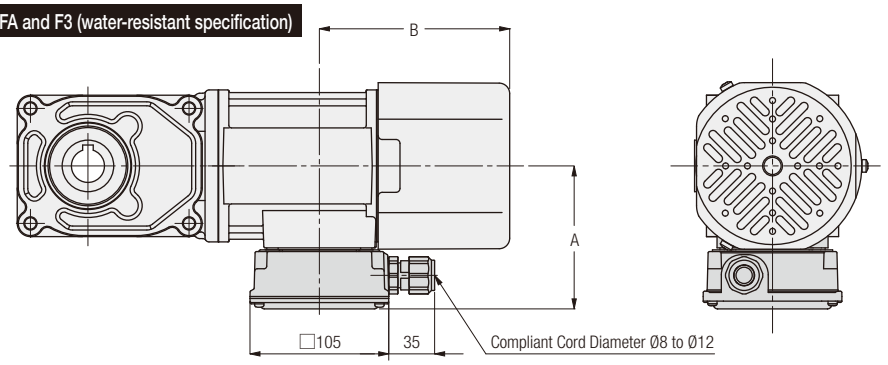

Motor Power	Box Type	Common through all Series			Positional Change of the Terminal Box
		A	B		
			Non-Brake	Brakemotor	
0.1 kW	E	108.5	53.5	115	90 ° Division
0.2 kW	E	108.5	53.5	144	90 ° Division
0.4 kW	E	115.5	85.5	146.5	90 ° Division
0.75 kW	E	126.5	96.5	155.5	90 ° Division
1.5 kW	E	137.5	108.5	–	90 ° Division
2.2 kW	E	147.5	109	–	90 ° Division

Note 1: The figure above illustrates the standard position of the terminal box. If you want to change the position of the terminal box, please inform us when placing an order. Refer to page 583.
Note 2: The figure is a representative figure, and the shape of the motor may differ.
Note 3: The FA type is available only for 0.4 kW to 2.2 kW.

MID Series (1-Phase) <G3 Type, GA Type, H2 Type>

A terminal box is provided as a standard item.

Common to G3, GA and H2

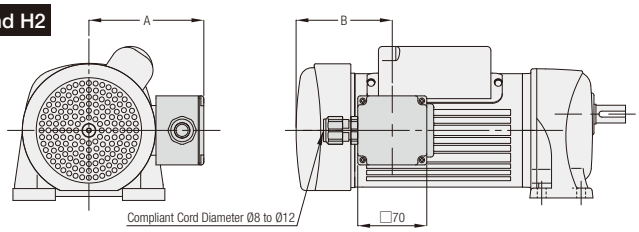

Motor Power	Box Type	Common through all Series			Positional Change of the Terminal Box
		A	B		
			Non-Brake	Brakemotor	
0.1 kW	A	116.5	50 (85) (Note 1)	100.5 (87.5) (Note 1)	90 ° Division
0.2 kW	A	116.5	87	97.5	90 ° Division
0.4 kW	A	131.5	110.5	119	90 ° Division

Note 1: The values in parentheses ( ) represent the H2 type.
Note 2: The figure above illustrates the standard position of the terminal box. If you want to change the position of the terminal box, please inform us when placing an order. Refer to page 584.
Note 3: The figure is a representative figure, and the shape of the motor and that of the fan cover may differ.
Note 4: The GA type is available only for 0.4 kW .

MID Series (1-Phase) <F Type, FA Type, F3 Type>

Common to F, FA and F3

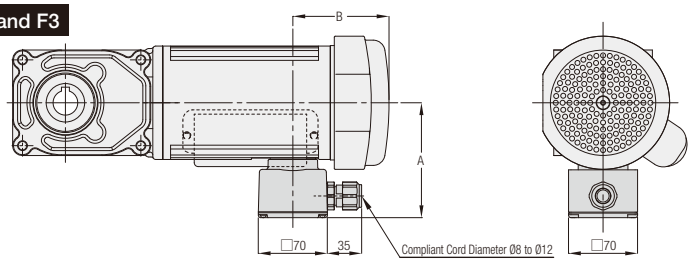

Motor Power	Box Type	Common through all Series			Positional Change of the Terminal Box
		A	B		
			Non-Brake	Brakemotor	
0.1 kW	A	116.5	85	87.5	90 ° Division
0.2 kW	A	116.5	87	97.5	90 ° Division
0.4 kW	A	131.5	110.5	119	90 ° Division

Note 1: The figure above illustrates the standard position of the terminal box. If you want to change the position of the terminal box, please inform us when placing an order. Refer to page 585.
Note 2: The figure is a representative figure, and the shape of the motor and that of the fan cover may differ.
Note 3: The FA type is available only for 0.4 kW.

MID Series (Clutch/Brake) <G3 Type, H2 Type>

A terminal box is provided as a standard item.

Common to G3 and H2

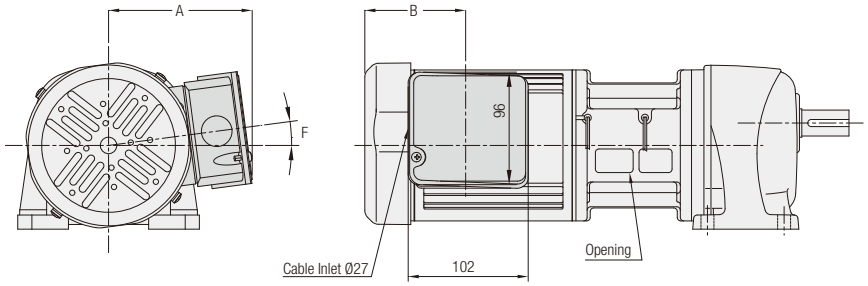

Motor Power	Box Type	Common through all Series			Positional Change of the Terminal Box
		A	B	F	
0.1 kW	T	110	52.5	0 °	90 ° Division
0.2 kW	T	110	52.5	0 °	90 ° Division
0.4 kW	T	121	85.5	7.5 °	90 ° Division
0.75 kW	T	132	96.5	7.5 °	90 ° Division

Note 1: The figure above illustrates the standard position of the terminal box. If you require a change the position of the terminal box, please inform us upon placing an order. Refer to page 584.
Note 2: The figure is a representative figure, and the shape of the motor and that of the fan cover may differ.
Note 3: If the position of the terminal box is changed, the clutch lead wire will be set in the same position and direction as the terminal box. Make sure no foreign substances etc. enter the opening of the clutch brake.

Positional Change of the Terminal Box

How to instruct change of: Lead wire type, position of the terminal box or the cabtyre cable

If you want to use lead wires, a terminal box, and cabtyre cables (water-resistant specification) in positions other than the standard mounting positions, you may order the change with the appropriate code shown in the table below.

Model name example:GLM-12-20-T25 ⇒ T (Lower) Hole (Load-side) GLM-12-20-T25XT6H3

MINI Series

■ Order Method

Standard Specification		Water Resistant Specification	
Lead Wire Type/With Terminal Box		Cabtyre Cable Type	
Change of the lead wire box position		Changes of the cable position and the cable lead-in position	
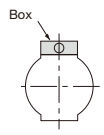 Standard	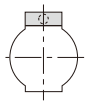 Hole (Load-side)	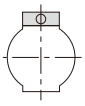 Standard	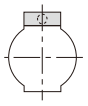 Hole (Load-side)
Standard	H3	Standard	H3
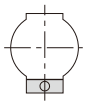 T (Lower)	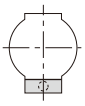 T (Lower) Hole (Load-side)	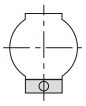 T (Lower)	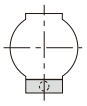 T (Lower) Hole (Load-side)
T6	T6 H3	T6	T6 H3

● G Type

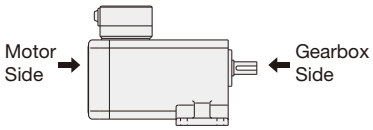

● H Type

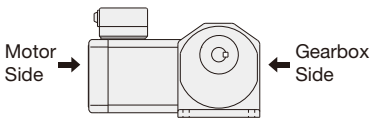

Note 1: All diagrams are viewed from the motor side of the gearmotor.
Note 2: No option specification required for standard models.
Note 3: It is not necessary to designate the position of the T shaft for F2S (right angle hollow bore) and for F2F (right angle shaft) because they are symmetrical in design. (double flange mount).

● Definition of Designations

- "T" represents the lead wire, terminal box, or cabtyre cable.
- "Hole" represents a cabtyre cable inlet.

Regarding changes of the lead wire type and the position of the terminal box of the F2 Type F2F (right angle shaft)

The L shaft of the F2F (concentric right angle shaft) is as shown in [Figure-1]. The F2 type is designed for concentric flange mounting on both sides, and the output shaft can therefore be positioned on the right side as shown in [Figure-2] by rotating the gearmotor to 180 °. In this case, however, the lead wires will be in the lower position. If you want to set the lead wires in the upper position for the convenience of use, you may place an order for the lead wire at the lower position (option code "T6") for a standard product [Figure-1]. By rotating the gearmotor to 180 ° in this state, the output shaft will be positioned on the right side with the lead wires in the upper position. This also applies to gearmotors with a terminal box.

Figure when viewed from the motor side

When the output shaft is an L shaft and the lead wires are in the upper position, the output shaft is on the left side when viewed from the motor side.

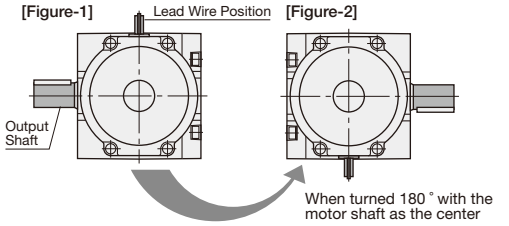

Method for Ordering a Positional Change of the Terminal Box

MID Series (3-Phase) <G3 Type, GA Type, H2 Type>

If you use the terminal box in a position other than the standard position, you may order the change with the appropriate code shown in the table below.

Model name example: Standard specification G3L28N30-MM04TNNTB2 ⇒ T (Upper) Hole (Right) G3L28N30-MM04TNNTB2XTZH6

* The specifications marked with ▲ do not support some models. For more information, please see the precautions of Positional Change of the Terminal Box on page 586.

■ Order Method

	Motor Power 3-Phase 0.1 kW/0.2 kW				Motor Power 3-Phase 0.4 kW to 2.2 kW			
Design	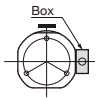 Standard	 Hole (Lower)	 Hole (Load-side)	 Hole (Upper)	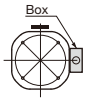 Standard	 Hole (Lower)	 Hole (Load-side)	 Hole (Upper)
Option Code	Standard	H6	H3 ▲	HZ	Standard	H6	H3	HZ
Design	 T (Upper)	 T (Upper) Hole (Right)	 T (Upper) Hole (Load-side)	 T (Upper) Hole (Left)	 T (Upper)	 T (Upper) Hole (Right)	 T (Upper) Hole (Load-side)	 T (Upper) Hole (Left)
Option Code	TZ	TZ H6	TZ H3 ▲	TZ HZ	TZ	TZ H6	TZ H3	TZ HZ
Design	 T (Left)	 T (Left) Hole (Upper)	 T (Left) Hole (Load-side)	 T (Left) Hole (Lower)	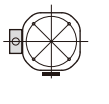 T (Left)	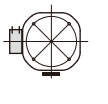 T (Left) Hole (Upper)	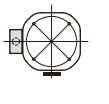 T (Left) Hole (Load-side)	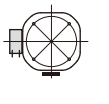 T (Left) Hole (Lower)
Option Code	T9	T9 H6	T9 H3 ▲	T9 HZ	T9	T9 H6	T9 H3	T9 HZ
Design	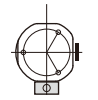 T (Lower)	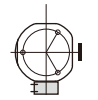 T (Lower) Hole (Left)	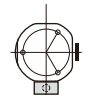 T (Lower) Hole (Load-side)	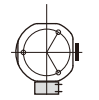 T (Lower) Hole (Right)	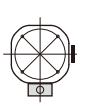 T (Lower)	 T (Lower) Hole (Left)	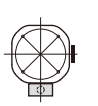 T (Lower) Hole (Load-side)	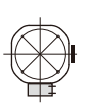 T (Lower) Hole (Right)
Option Code	T6 ▲	T6 H6 ▲	T6 H3 ▲	T6 HZ ▲	T6 ▲	T6 H6 ▲	T6 H3 ▲	T6 HZ ▲

Note 1: All diagrams are viewed from the motor side of the gearmotor.
Note 2: No option specification required for standard models.
Note 3: Please note that structurally, the terminal box's position cannot be changed by the customer. If you require a change in position of the terminal box, be sure to place an order with the appropriate code shown in the figure above.
Note 4: For only 0.2 kW G3 Type with frame size 28, the terminal box will be displaced by 17 degrees from the center in the clockwise direction when its position is "TZ (upper)" or "T6 (lower)." Please note that the terminal box will not be positioned on the top or bottom face.
Note 5: The bold line ▬ indicates the attachment position of the nameplate. Please note that depending on the mounting position/orientation, the nameplate may be difficult to see. If the attachment position is inconvenient, the nameplate may be attached at a different position upon request. For more details, please contact your nearest Sales Office or the CS Center.
Note 6: The GA type is available only for 0.4 kW to 2.2 kW.

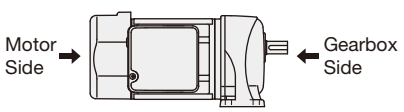

- The gearbox side hole and the motor side hole will always be set in the positions "3" and "9," respectively, regardless of the position of the terminal box.

● Definition of Designations

- "T" represents the terminal box.
- "Hole" represents the power supply inlet hole.

MID Series (3-Phase) <F Type, FA Type, F3 Type>

If you use the terminal box in a position other than the standard position, you may order the change with the appropriate code shown in the table below.

Model name example: Standard specification F3S25N30-MM02TNNTB2 ⇒ T (Upper) Hole (Right) F3S25N30-MM02TNNTB2XTZH6

*The specifications marked with ▲ do not support some F Type models. Please note that for some models of the F3 Type, the cable outlet is close to the mounting surface, and must be checked in advance. For more information, please see the precautions of Positional Change of the Terminal Box on page 586.

■ Order Method

	Motor Power 3-Phase 0.1 kW/0.2 kW				Motor Power 3-Phase 0.4 kW to 2.2 kW			
Design	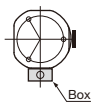 Box Standard	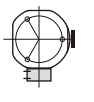 Hole (Left)	 Hole (Load-side)	 Hole (Right)	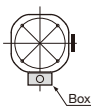 Box Standard	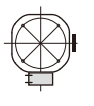 Hole (Left)	 Hole (Load-side)	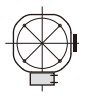 Hole (Right)
Option Code	Standard	H6	H3	HZ	Standard	H6	H3	HZ
Design	 T (Right)	 T (Right) Hole (Lower)	 T (Right) Hole (Load-side)	 T (Right) Hole (Upper)	 T (Right)	 T (Right) Hole (Lower)	 T (Right) Hole (Load-side)	 T (Right) Hole (Upper)
Option Code	T3	T3 H6	T3 H3 ▲	T3 HZ	T3	T3 H6	T3 H3	T3 HZ
Design	 T (Upper)	 T (Upper) Hole (Right)	 T (Upper) Hole (Load-side)	 T (Upper) Hole (Left)	 T (Upper)	 T (Upper) Hole (Right)	 T (Upper) Hole (Load-side)	 T (Upper) Hole (Left)
Option Code	TZ	TZ H6	TZ H3	TZ HZ	TZ	TZ H6	TZ H3	TZ HZ
Design	 T (Left)	 T (Left) Hole (Upper)	 T (Left) Hole (Load-side)	 T (Left) Hole (Lower)	 T (Left)	 T (Left) Hole (Upper)	 T (Left) Hole (Load-side)	 T (Left) Hole (Lower)
Option Code	T9	T9 H6	T9 H3 ▲	T9 HZ	T9	T9 H6	T9 H3	T9 HZ

Note 1: All diagrams are viewed from the motor side of the gearmotor.
Note 2: No option specification required for standard models.
Note 3: Please note that structurally, the terminal box's position cannot be changed by the customer. If you require a change in position of the terminal box, be sure to place an order with the appropriate code shown in the figure above.
Note 4: The bold line ▬ indicates the attachment position of the nameplate. Please note that depending on the mounting position/orientation, the nameplate may be difficult to see. If the attachment position is inconvenient, the nameplate may be attached at a different position upon request. For more details, please contact your nearest Sales Office or the CS Center.
Note 5: The FA type is available only for 0.4 kW to 2.2 kW.

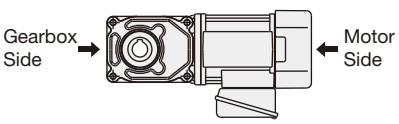

- The gearbox side hole and the motor side hole will always be set in the positions "3" and "9," respectively, regardless of the position of the terminal box.

● Definition of Designations

- "T" represents the terminal box.
- "Hole" represents the power supply inlet hole.

MID Series (Clutch/Brake, 1-Phase) <G3 Type, GA Type, H2 Type>

If you use the terminal box in a position other than the standard position, you may order the change with the appropriate code shown in the table below.

Model name example: Standard specification G3L28N30-EM04TNJTN ⇒ T (Upper) Hole (Right) G3L28N30-EM04TNJTN<u>XTZH6</u>

■ Order Method

	Motor Power 3-Phase 0.1 kW/0.2 kW 1-Phase 0.1 kW/0.2 kW				Motor Power 3-Phase 0.4 kW/0.75 kW 1-Phase 0.4 kW			
Design	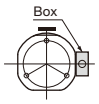 Standard	 Hole (Lower)	 Hole (Load-side)	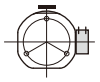 Hole (Upper)	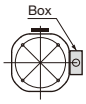 Standard	 Hole (Lower)	 Hole (Load-side)	 Hole (Upper)
Option Code	Standard	H6	H3	HZ	Standard	H6	H3	HZ
Design	 T (Upper)	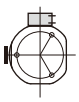 T (Upper) Hole (Right)	 T (Upper) Hole (Load-side)	 T (Upper) Hole (Left)	 T (Upper)	 T (Upper) Hole (Right)	 T (Upper) Hole (Load-side)	 T (Upper) Hole (Left)
Option Code	TZ	TZ H6	TZ H3	TZ HZ	TZ	TZ H6	TZ H3	TZ HZ
Design	 T (Left)	 T (Left) Hole (Upper)	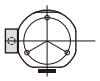 T (Left) Hole (Load-side)	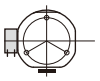 T (Left) Hole (Lower)	 T (Left)	 T (Left) Hole (Upper)	 T (Left) Hole (Load-side)	 T (Left) Hole (Lower)
Option Code	T9	T9 H6	T9 H3	T9 HZ	T9	T9 H6	T9 H3	T9 HZ
Design	 T (Lower)	 T (Lower) Hole (Left)	 T (Lower) Hole (Load-side)	 T (Lower) Hole (Right)	 T (Lower)	 T (Lower) Hole (Left)	 T (Lower) Hole (Load-side)	 T (Lower) Hole (Right)
Option Code	T6	T6 H6	T6 H3	T6 HZ	T6	T6 H6	T6 H3	T6 HZ

Note 1: All diagrams are viewed from the motor side of the gearmotor.
Note 2: No option specification required for standard models.
Note 3: Please note that structurally, the terminal box's position cannot be changed by the customer. If you require a change in position of the terminal box, be sure to place an order with the appropriate code shown in the figure above.
Note 4: For only 0.2 kW G3 Type with frame size 28, the terminal box will be displaced by 17 degrees from the center in the clockwise direction when its position is "TZ (upper)" or "T6 (lower)." Please note that the terminal box will not be positioned on the top or bottom face.
Note 5: The bold line ▬ indicates the attachment position of the nameplate. Please note that depending on the mounting position/orientation, the nameplate may be difficult to see. If the attachment position is inconvenient, the nameplate may be attached at a different position upon request. For more details, please contact your nearest Sales Office or the CS Center.
Note 6: Single-phase capacitor start type rotates alongside with the terminal box. Check the device etc. for interference in advance. For more details, please contact your nearest Sales Office or the CS Center.
Note 7: The GA type is available only in single-phase 0.4 kW.

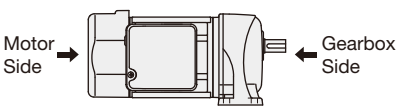

- The gearbox side hole and the motor side hole will always be set in the positions "3" and "9," respectively, regardless of the position of the terminal box.

● Definition of Designations

- "T" represents the terminal box.
- "Hole" represents the power supply inlet hole.

MID Series (1-Phase) <F Type, FA Type, F3 Type>

If you use the terminal box in a position other than the standard position, you may order the change with the appropriate code shown in the table below.

Model name example: Standard specification F3S25N30-MM02CNJAB2 ⇒ T (Upper) Hole (Right) F3S25N30-MM02CNJAB2XTZH6

■ Order Method

	Motor Power 1-Phase 0.1 kW/0.2 kW				Motor Power 1-Phase 0.4 kW			
Design	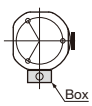 Standard	 Hole (Left)	 Hole (Load-side)	 Hole (Right)	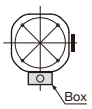 Standard	 Hole (Left)	 Hole (Load-side)	 Hole (Right)
Option Code	Standard	H6	H3	HZ	Standard	H6	H3	HZ
Design	 T (Right)	 T (Right) Hole (Lower)	 T (Right) Hole (Load-side)	 T (Right) Hole (Upper)	 T (Right)	 T (Right) Hole (Lower)	 T (Right) Hole (Load-side)	 T (Right) Hole (Upper)
Option Code	T3	T3 H6	T3 H3	T3 HZ	T3	T3 H6	T3 H3	T3 HZ
Design	 T (Upper)	 T (Upper) Hole (Right)	 T (Upper) Hole (Load-side)	 T (Upper) Hole (Left)	 T (Upper)	 T (Upper) Hole (Right)	 T (Upper) Hole (Load-side)	 T (Upper) Hole (Left)
Option Code	TZ	TZ H6	TZ H3	TZ HZ	TZ	TZ H6	TZ H3	TZ HZ
Design	 T (Left)	 T (Left) Hole (Upper)	 T (Left) Hole (Load-side)	 T (Left) Hole (Lower)	 T (Left)	 T (Left) Hole (Upper)	 T (Left) Hole (Load-side)	 T (Left) Hole (Lower)
Option Code	T9	T9 H6	T9 H3	T9 HZ	T9	T9 H6	T9 H3	T9 HZ

Note 1: All diagrams are viewed from the motor side of the gearmotor.
Note 2: No option specification required for standard models.
Note 3: Please note that structurally, the terminal box's position cannot be changed by the customer. If you require a change in position of the terminal box, be sure to place an order with the appropriate code shown in the figure above.
Note 4: The bold line ▬ indicates the attachment position of the nameplate. Please note that depending on the mounting position/orientation, the nameplate may be difficult to see. If the attachment position is inconvenient, the nameplate may be attached at a different position upon request. For more details, please contact your nearest Sales Office or the CS Center.
Note 5: Single-phase capacitor start type rotates alongside with the terminal box. Check the device etc. for interference in advance. For more details, please contact your nearest Sales Office or the CS Center.
Note 6: The FA type is available only for 0.4 kW.

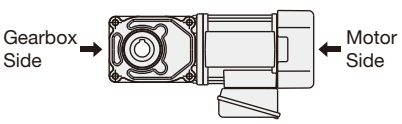

- The gearbox side hole and the motor side hole will always be set in the positions "3" and "9," respectively, regardless of the position of the terminal box.

● Definition of Designations

- "T" represents the terminal box.
- "Hole" represents the power supply inlet hole.

Precautions about the Positional Change of the Terminal Box

MID Series (3-Phase)

■ Specifications that do not allow the position of the terminal box to be changed

The specifications shown below do not allow the position of the terminal box and the direction of the holes to be changed. Please take note.
For more information, please contact your nearest Sales Office or the CS Center.

Option Code	Mounting Type	Frame Size	Motor Power	Terminal Box Type
H3 Hole (Load-side)	G3L	28	0.2 kW	T-BOX/E-BOX
	G3L	32	0.4 kW	E-BOX
	G3F	28	0.2 kW	T-BOX/E-BOX
	G3F	32	0.4 kW	E-BOX
	G3K	28	0.2 kW	T-BOX/E-BOX
	G3K	32	0.4 kW	E-BOX
	H2F	22	0.1 kW	T-BOX/E-BOX
	H2F	22	0.2 kW	E-BOX
	FS	30	0.1 kW	E-BOX
	FS	35	0.1 kW	E-BOX
	FS	45	0.2 kW	E-BOX
T3H3 T (Right) Hole (Load-side)	F3S	20	0.2 kW	E-BOX
T6 T (Lower)	G3L	28	0.2 kW	T-BOX/E-BOX
	G3L	32	0.4 kW	E-BOX
T6H3 T (Lower) Hole (Load-side)	G3L	18	0.1 kW	T-BOX/E-BOX
	G3L	18	0.2 kW	T-BOX/E-BOX
	G3L	22	0.1 kW	T-BOX/E-BOX
	G3L	22	0.2 kW	E-BOX
	G3L	28	0.1 kW	T-BOX/E-BOX
	G3L	28	0.2 kW	T-BOX/E-BOX
	G3L	28	0.4 kW	E-BOX
	G3L	32	0.1 kW	T-BOX/E-BOX
	G3L	32	0.2 kW	E-BOX
	G3L	32	0.4 kW	T-BOX/E-BOX
	G3L	40	0.2 kW	E-BOX
	G3F	28	0.1 kW	E-BOX
	G3F	28	0.2 kW	T-BOX/E-BOX
	G3F	32	0.1 kW	E-BOX
	G3F	32	0.2 kW	E-BOX
	G3F	32	0.4 kW	E-BOX
	G3F	40	0.2 kW	E-BOX
	G3K	28	0.1 kW	E-BOX
	G3K	28	0.2 kW	T-BOX/E-BOX

Option Code	Mounting Type	Frame Size	Motor Power	Terminal Box Type
T6H3 T (Lower) Hole (Load-side)	G3K	32	0.1 kW	E-BOX
	G3K	32	0.2 kW	E-BOX
	G3K	32	0.4 kW	E-BOX
	H2L	22	0.1 kW	T-BOX/E-BOX
	H2L	22	0.2 kW	E-BOX
	H2L	28	0.1 kW	E-BOX
	H2L	28	0.2 kW	T-BOX/E-BOX
	H2L	32	0.1 kW	E-BOX
	H2L	32	0.2 kW	E-BOX
	H2L	32	0.4 kW	E-BOX
	H2L	40	0.2 kW	E-BOX
T6H6 T (Lower) Hole (Left)	G3L	28	0.2 kW	E-BOX
	G3L	32	0.4 kW	E-BOX
T6HZ T (Lower) Hole (Right)	G3L	28	0.2 kW	E-BOX
	G3L	32	0.4 kW	E-BOX
T9H3 T (Left) Hole (Load-side)	G3L	22	0.1 kW	E-BOX
	G3L	28	0.2 kW	T-BOX/E-BOX
	G3L	32	0.4 kW	E-BOX
	G3F	28	0.2 kW	T-BOX/E-BOX
	G3F	32	0.4 kW	E-BOX
	G3K	28	0.2 kW	T-BOX/E-BOX
	G3K	32	0.4 kW	E-BOX
	FS	25	0.1 kW	T-BOX/E-BOX
	FS	30	0.2 kW	E-BOX
	FF	22	0.1 kW	T-BOX/E-BOX
TZH3 T (Upper) Hole (Load-side)	G3L	28	0.2 kW	T-BOX/E-BOX
	G3L	32	0.4 kW	E-BOX
	G3F	22	0.1 kW	E-BOX
	G3F	28	0.2 kW	T-BOX/E-BOX
	G3F	32	0.4 kW	E-BOX
	G3K	28	0.2 kW	T-BOX/E-BOX
	G3K	32	0.4 kW	E-BOX
	H2L	28	0.2 kW	E-BOX

Precautions about the positional change of the terminal box and the manual release lever

MID Series Manual Release Device

■ Specifications that do not allow the position of the terminal box to be changed

Option Code	Mounting Type	Frame Size	Motor Power	Terminal Box Type
T9R6 T (Left) Manual (Lower)	G3L	28	0.4 kW	T-BOX
	H2L	28	0.4 kW	T-BOX

MID Series (3-Phase)

■ Specifications that need to be checked in advance when changing the position of the terminal box

With regard to the model specifications shown below, the cable outlet is located near the mounting surface. Please check the mounting position, the area around the lead wire outlet, etc. in advance.
For more information, please contact your nearest Sales Office or the CS Center.

Option Code	Mounting Type	Frame Size	Motor Power	Terminal Box Type
T3H3 T (Right) Hole (Load-side)	FS	25	3-Phase 0.1 kW	T-BOX/E-BOX
	FF	22	3-Phase 0.1 kW	T-BOX/E-BOX
	F3S	20	3-Phase 0.1 kW	T-BOX/E-BOX
	F3S	25	3-Phase 0.1 kW	T-BOX/E-BOX
	F3F	18	3-Phase 0.1 kW	T-BOX/E-BOX
	F3F	22	3-Phase 0.1 kW	T-BOX/E-BOX
T9H3 T (Left) Hole (Load-side)	F3S	20	3-Phase 0.1 kW	T-BOX/E-BOX
	F3S	25	3-Phase 0.1 kW	T-BOX/E-BOX
	F3F	18	3-Phase 0.1 kW	T-BOX/E-BOX
	F3F	22	3-Phase 0.1 kW	T-BOX/E-BOX
	F3S	20	3-Phase 0.2 kW	T-BOX/E-BOX
	F3S	25	3-Phase 0.2 kW	T-BOX/E-BOX
	F3F	18	3-Phase 0.2 kW	T-BOX/E-BOX
	F3F	22	3-Phase 0.2 kW	T-BOX/E-BOX

Dimensions Required for Removing the Fan Cover and the Brake Cover

Each of the figures below shows the space required to adjust the gap of the brake in the installed state, and the dimension required to remove the fan cover or the brake cover.

* Keep a distance of 20 mm or more between the motor and the wall surface to secure air ventilation.

MINI Series

■ Indoor Specification

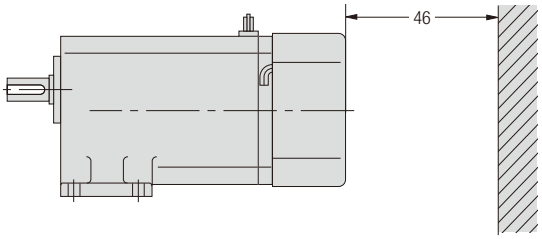

■ Water-resistant Specification

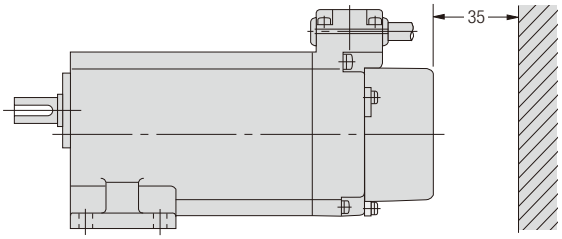

MID Series

■ Indoor Specification

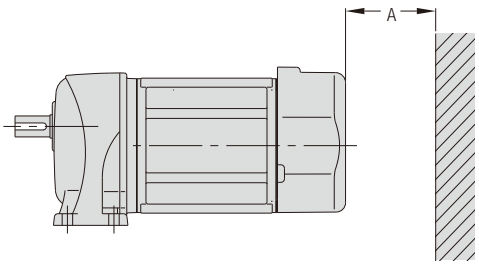

Type	3-Phase						1-Phase			
	0.1 kW	0.2 kW	0.4 kW	0.75 kW	1.5 kW	2.2 kW	100 W	100 W	200 W	400 W
G3/GA	44	59	56	59	90	90	–	59	59	59
H2	44	59	56	59	90	90	44	–	59	59
F/FA	44	59	56	59	90	90	44	–	59	59
F3	44	59	56	59	90	90	44	–	59	59

Note 1: The FA type is available only for 3-phase 0.4 kW to 2.2 kW and 1-phase 400 W.

■ Water-resistant Specification

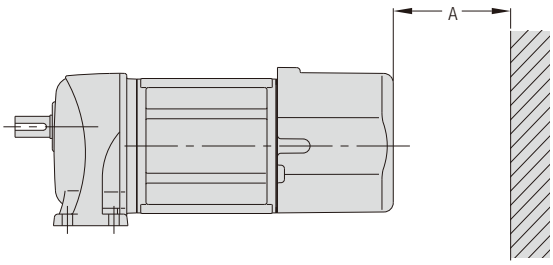

Type	3-Phase			
	0.1 kW	0.2 kW	0.4 kW	0.75 kW
All Models	44	85	96	117

Rectifier and Surge Suppressor of Gearmotors with Brake

The rectifier included with the product is required to operate the brake of a gearmotor with a brake. For rectifier types and supporting voltages, refer to the information shown below.
Since the braking delay time is different among connection methods, select the most appropriate connection method from among those on page 549 for the application.
The rectifier contains a surge suppressor, however, if you still experience issues with electrical noises, please add another surge suppressor or a noise filter.

Series	Number of Phases	Voltage	Rectifier		Surge Suppressor (Option)
			Model	Input voltage range	
MINI	3-Phase	Standard Voltage	A200-D90 (A100-D45)	200 V to 220 VAC (100 V to 110 VAC)	OP-ERZV10D471 (For 200 V Class Brake)
		High Voltage (200 V Class)			
	1-Phase	Standard Voltage			
		High Voltage (200 V Class)			
MID	3-Phase	Standard Voltage	A200-D90-UL	200 V to 230 VAC	OP-ERZV10D471 (For 200 V Class Brake)
		High Voltage (400 V Class)	A400-D180	380 V to 480 VAC	OP-ERZV10D911 (For 400 V Class Brake)
	1-Phase	Standard Voltage	A100-D90-UL	100 V to 120 VAC	OP-ERZV10D471 (For 100 or 200 V Class Brake)
		High Voltage (200 V Class)	A200-D90-UL	200 V to 230 VAC	
	3-Phase Clutch/Brake	Standard Voltage	A200-D90 (A100-D45)	200 V to 220 VAC (100 V to 110 VAC)	OP-ERZV10D471 (For 200 V Class Brake)

■ Rectifier

● A200-D90 (A100-D45)



Approx. Weight 40 g

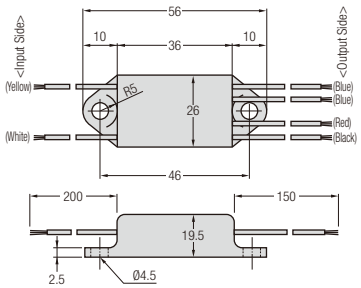

● A200-D90-UL



Approx. Weight 40 g

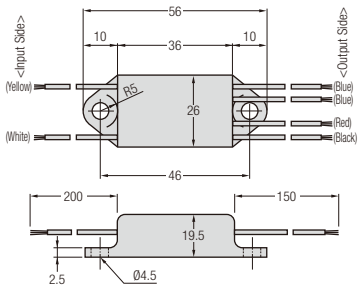

● A100-D90-UL



Approx. Weight 40 g

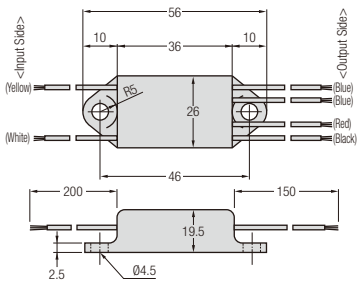

● A400-D180



Approx. Weight 40 g

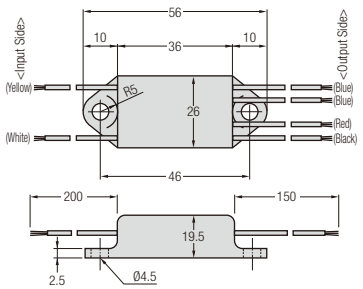

■ Surge Suppressor

● OP-ERZV10D471



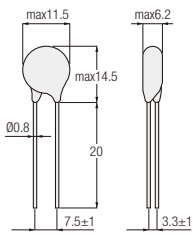

● OP-ERZV10D911



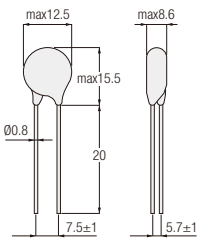

Use a surge suppressor for the contact of a brake DC switching connection to extinguish sparks.

Manual Brake Release Lever (optional)

You can install a manual brake release lever if you desire.
The terminal box and the manual release lever remain in the same positional relationship.
* Water-resistant models (IP65) cannot be equipped with a manual brake release device.

G3, GA and H2 Types

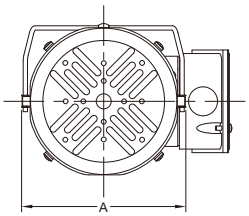

● During operation

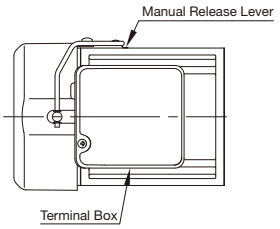

● When releasing the brake

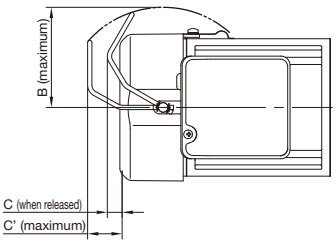

Note 1: Rotate the manual release lever attached to the lever clasp on the top of the fan cover to the rear of the motor by about 60 ° degrees to release the brake.
Note 2: Do not release the brake by 90 ° degrees or more.

F, FA and F3 Types

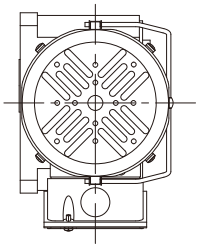

* The diagram above is a representative diagram. The F3 Type is designed for flange mounting on both sides, and the shape of the gearhead is different.

Dimensions by Motor Power Common to G3, GA, H2, F, FA, and F3 Types

Motor Power	0.1 kW	0.2 kW	0.4 kW	0.75 kW	1.5 kW	2.2 kW
A	143	143	153	175	199	213
B	86.5	86.5	93	103.5	117	125
C (when released)	16	5.5	10.5	10.5	0	4.5
C' (maximum)	34.5	24	30	38.9	31	42

Note 1: The manual release lever and the terminal box remain in the same positional relationship. Thus, when the position of the terminal box is changed, the position of the manual release lever will also change. Refer to the schematic diagram below.
Note 2: For changes of the position of the manual release lever, refer to the table below.
Note 3: Dimension A is the outermost diameter of the retaining ring.
Note 4: GA and FA types are available only in three-phase 0.4 kW to 2.2 kW.

■ Positional Change of the Terminal Box and the Manual Release Lever

Refer to the schematic diagram below for the positional relationship with the manual release lever when the position of the terminal box is changed.
In this case, the option code that indicates the position of the manual release lever will be displayed on the nameplate.

G3 Type, GA Type, H2 Type	
3-Phase 0.1 kW to 0.2 kW	3-Phase 0.4 kW to 2.2 kW
	
Standard	Standard
	
T (Upper) Manual (Left)	T (Upper) Manual (Left)
TZR9	TZR9
	
T (Left) Manual (Lower-right)	T (Left) Manual (Lower)
T9R4	T9R6(Note 3)
	
T (Lower) Manual (Upper-right)	T (Lower) Manual (Right)
T6R1	T6R3

F Type, FA Type, F3 Type	
3-Phase 0.1 kW to 0.2 kW	3-Phase 0.4 kW to 2.2 kW
	
Standard	Standard
	
T (Right) Manual (Upper)	T (Right) Manual (Upper)
T3RZ	T3RZ
	
T (Upper) Manual (Lower-left)	T (Upper) Manual (Left)
TZR7	TZR9
	
T (Left) Manual (Lower-right)	T (Left) Manual (Lower)
T9R4	T9R6

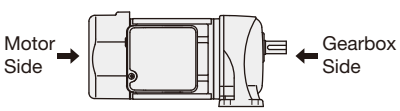

Note 1: All diagrams are viewed from the motor side of the gearmotor.
The bold line ▬ indicates the attachment position of the nameplate. Please note that depending on the mounting position/orientation, the nameplate may be difficult to see.
Note 2: If the attachment position is inconvenient, it can be changed in advance upon request. For more details, please contact your nearest Sales Office or the CS Center.
Note 3: The position of the terminal box of some models cannot be changed because the manual release lever protrudes from the mounting surface. For applicable types, refer to page 586.
Note 4: GA and FA types are available only in three-phase 0.4 kW to 2.2 kW.

Combination of Gearmotors and Inverter/VFD

MINI Series

1. Usable Frequency Range
   In general, please use the motor within the range of 5 Hz to 120 Hz.
   (1) Precautions for high-speed operation over 60 Hz
   When the motor runs at frequencies over 60 Hz, vibration and noise levels will increase.
   The circumferential velocity also increases, which may result in shorter service life of the oil seal.
   (2) Precautions for low-speed operation
   During low-speed operation the cooling effect of the motor decreases. Please note that it may cause an unusual temperature rise. (Please keep the motor surface temperature below 90 °C.)
2. Torque Characteristics of the motor (Operating Limit)
   The torque characteristics of the motor greatly vary depending on the type of the inverter used with the motor, as well as the control method with said inverter.
3. Brakemotor
   When wiring the brake, please bypass the inverter (supply the power from the primary side of the inverter).
   The rectifier may be damaged.
   Otherwise the brake may malfunction due to voltage fluctuation.
   Please refer to the wiring diagram shown below.

AC Switching (A)

3-Phase Standard Voltage

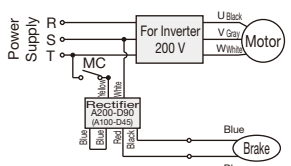

3-Phase Standard Voltage (C Type Terminal Box with Built-in Rectifier)

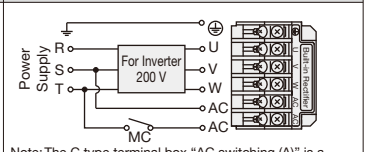

Note: The C type terminal box "AC switching (A)" is a custom option item, and it is necessary to specify its specifications when placing an order.

3-Phase High Voltage (400 V Class)

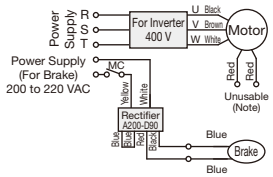

3-Phase High Voltage (400 V Class) (C Type Terminal Box with Built-in Rectifier)

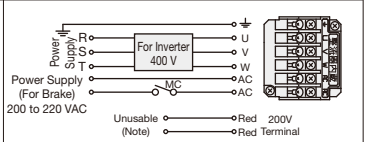

Note: The C type terminal box "AC switching (A)" is a custom option item, and it is necessary to specify its specifications when placing an order.

DC Switching

3-Phase Standard Voltage

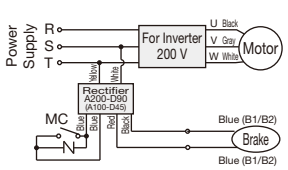

3-Phase High Voltage (400 V Class)

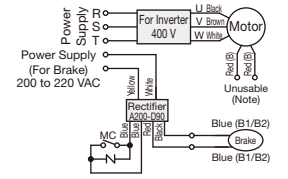

MC: Magnetic Contactor -N-: Surge Suppressor (optional)

Note 1: For Three-phase High Voltage (400 V Class) and special voltages exceeding 220 V, there are two 200 V terminals (red lead wires) extending out from the motor as brake power supply, however, these 200 V terminals cannot be used when using the motor with an inverter.
Note 2: Prepare a 200 V power supply separately for the input lead wire (white and yellow/AC terminal) of the rectifier.
For safety, be sure to insulate the 200 V terminals (red lead wires).
Note 3: For a DC switching connection, connect a surge suppressor (optional) between the contacts. For surge suppressors (optional), refer to page 589.
Note 4: Use switches of 110 VDC with a contact point rating of DC13 to block the inductive load of the DC coil when using DC switching connection. For more details, please contact your nearest Sales Office or the CS Center.
* Contact rating class DC13 is a specification applicable to coil loads and a type defined in JIS C 8201-5-1 (Low-voltage switchgear and control gear).
Note 5: The rectifier contains a diode and will become unusable if it is shorted due to, for example, improper wiring.

4. Motor Protection
   Due to their small rated current, depending on the inverter used, a MINI series gearmotor may not be fully protected with the internal thermal setting alone. In such a case, please set up an additional external safeguard function on the outside of the motor.
5. When driving a 400 V class motor with an inverter
   A surge voltage may occur between the terminals of the motor and deteriorate the insulation of the motor.
   In general, there are two methods to suppress surge voltages: via suppressing the rise of the voltage (output reactor) and suppressing the crest value (output filter).
   (1) Output reactor
   If the wiring length is relatively short, surge voltages can be reduced by installing an AC reactor on the output side of the inverter and suppressing the rise of the voltage. However, if the wiring length is long, suppressing the crest value of the surge voltage may become difficult.
   (2) Output filter
   Suppress the crest value of the terminal voltage of the motor by installing a filter on the output side of the inverter.

Please note that the explanation above is general information. We recommend that you consult with the inverter manufacturer for more information.

MID Series (3-Phase)

1. Usable Frequency Range
   In general, please use the motor within the range of 5 Hz to 120 Hz.
   Please use the gearmotors with a clutch/brake within the range of 5 Hz to 60 Hz.
   (1) Precautions for high-speed operation over 60 Hz
   When the motor runs at frequencies over 60 Hz, vibration and noise levels will increase. The circumferential velocity also increases, which may result in shorter service life of the oil seal.
   (2) Precautions for low-speed operation
   Please note that during low-speed operation, the cooling effect of the motor decreases and an unusual temperature rise may consequently occur.
2. Torque Characteristics of the motor (Operating Limit)
   The torque characteristics of the motor greatly vary depending on the type of the inverter used with the motor, as well as the control method with said inverter.
3. Gearmotors with a brake
   When wiring the brake, bypass the inverter. (The power will be supplied from the primary side of the inverter.) Otherwise the brake may malfunction due to voltage fluctuation. Refer to the wiring example shown below.

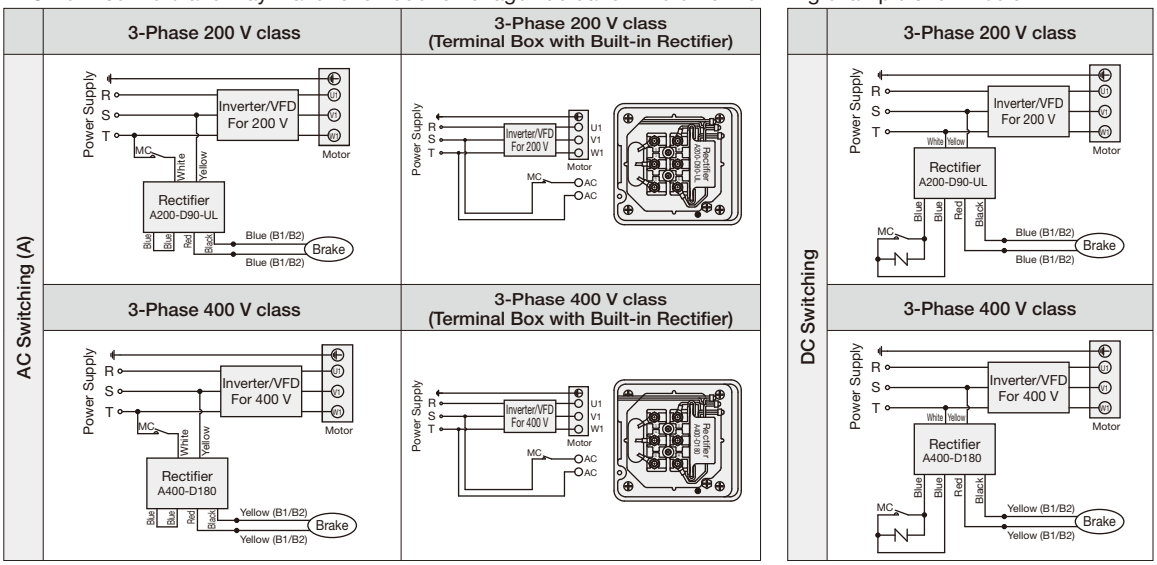

MC: Magnetic Contactor -N-: Surge Suppressor (optional)

Note 1: The B1 and B2 terminals or the AC terminal are provided in the terminal box.
Note 2: For a DC switching connection, connect a surge suppressor (optional) between the contacts. For surge suppressors (optional), refer to page 589.
Note 3: Use switches of 110 VDC <220 VDC> with a contact point rating of DC13 to block the inductive load of the DC coil when using DC switching connection. Please contact us for more details.
* Contact rating class DC13 is a specification applicable to coil loads and a type defined in JIS C 8201-5-1 (Low-voltage switchgear and control gear).
* The items in < > are for motors with a 400 V class brake (brake lead wires: yellow).

4. When running a 400 V class motor with an inverter
   A surge voltage may occur between the terminals of the motor and deteriorate the insulation of the motor.
   In general, there are two methods to suppress surge voltages: via suppressing the rise of the voltage (output reactor) and suppressing the crest value (output filter).
   (1) Output reactor
   If the wiring length is relatively short, surge voltages can be reduced by installing an AC reactor on the output side of the inverter and suppressing the rise of the voltage.
   However, if the wiring length is long, suppressing the crest value of the surge voltage may become difficult.
   (2) Output filter
   Suppress the crest value of the terminal voltage of the motor by installing a filter on the output side of the inverter.

Please note that the explanation above is general information. We recommend that you consult with the inverter manufacturer for more information.

Global Standards Conformance

We offer gearmotors that suit global directives, standards, and systems.

■ Gearmotors safety standards

Country Name	U.S.A.					Canada					Europe (EU)				China			
Standard	UL					CSA					EN				GB			
Series	MINI		MID			MINI		MID			MINI		MID		MINI		MID	
Number of Phases	1-Phase	3-Phase	1-Phase (Capacitor Run)	1-Phase (Capacitor Start)	3-Phase	1-Phase	3-Phase	1-Phase (Capacitor Run)	1-Phase (Capacitor Start)	3-Phase	1-Phase	3-Phase	1-Phase	3-Phase	1-Phase	3-Phase	1-Phase	3-Phase
Standard No.	UL1004-1 UL1004-3	UL1004-1	-		UL1004-1	C22.2 No. 100 C22.2 No. 77	C22.2 No. 100	-		C22.2 No. 100	EN60034-1	EN60034-1	-	EN60034-1 EN60034-5	GB/T12350-2022		-	GB/ T12350-2022
UL File No.	XEWR2. E141674	PRGY2. E172621	-		PRGY2. E172621	XEWR8. E141674	PRGY8. E172621	-		PRGY8. E172621	-				-			

● UL Standards

UL is the abbreviation of “Underwriters Laboratories Inc.,” which is a private testing organization established in 1894 by the Association of American Fire Insurance with the aim of protecting human lives and assets from fires, disasters, and other accidents. This organization performs testing and certification of all kinds of products, parts, and materials. The UL Standards are safety standards which is permitted by most of the states of the United States.

● CSA Standards

In Canada, the use of the CSA Standards is stipulated by law.
UL is authorized as a certification organization for the CSA Standards, and when products are certified to be compliant with relevant CSA Standards, UL will permit the display of the “cUL” mark on them.
Only products displaying the “cUL” mark will be permitted to be used in Canada.

● EU Directives/EN Standards

All machines exported to Europe are required to display “CE marking”.
In order to display “CE marking,” products are obligated to conform to EU Directives.
In principle, conformity to EN Standards is a prerequisite for certifying conformity to EU Directives
Our CE Markings are self declaring compliance with EU Directives.

● GB Standards (CCC mark)

After China joined the WTO (World Trade Organization), the China Compulsory Certification started operating in August 2003. The CCC unified all of the certification systems for products distributed in the country and obligates all items distributed on the Chinese market to bear the CCC mark.
Our induction motor with a power of 0.75 kW or less are subject to the CCC.
When exporting target gearmotors in the form of single units to China, the gearmotors themselves must be CCC-certified Product.
However, if the gearmotors are contained as part of devices and the complete devices can obtain CCC, the gearmotors are not always required to be CCC-certified.

■ Efficiency regulation compliance of low-voltage 3-phase induction motors

Country Name		U.S.A.	Canada	Europe (EU)		China		South Korea
Law		EISA	EEAct	COMMISSION REGULATION (EU) 2019/1781		High efficiency standard values and high efficiency grades of motors		Energy consumption efficiency Grade display system
Standard		NEMA MG1-12-12	CSA C390	IEC60034-1:2017		GB18613-2020		KS C 4202
Our Product Range	Power Range	0.75 kW/1 HP to 2.2 kW/3 HP	0.75 kW/1 HP to 2.2 kW/3 HP	0.2 kW to 0.4 kW	0.75 kW to 2.2 kW	0.2 kW to 0.4 kW (Note 1)	0.75 kW to 2.2 kW	0.75 kW to 2.2 kW
	Number of Motor Poles	4	4	4	4	4	4	4
	Efficiency Class	IE3	IE3	IE2	IE3	GB3 Class	GB3 Class	IE3

• Our product range describes the ranges covering each gearmotor efficiency regulation.
• The product range described above are subject to change without prior notice in response to changes to standards etc.
Note 1: The China GB3 class for 0.2 kW to 0.4 kW is available as an option.

Overseas Supply Voltage

MINI Series

■ Gearmotors/Gearmotors with Brake

● UL

Number of Phases	Motor Power	Voltage (V)/Frequency (Hz)
3-Phase	15 W to 90 W	200 V/50 Hz, 200 V/60 Hz, 220 V/60 Hz **208 V/60 Hz, 230 V/60 Hz** 380 V/50 Hz, 400 V/50 Hz, 400 V/60 Hz 440 V/60 Hz **460 V/60 Hz** **480 V/60 Hz**(*)
1-Phase	15 W to 90 W	100 V/50 Hz, 100 V/60 Hz **115 V/60 Hz** **120 V/60 Hz** 200 V/50 Hz, 200 V/60 Hz **220 V/60 Hz** **230 V/60 Hz**

Note 1: The voltages marked with (*) are not available for some models with motor powers of 15 W and 25 W. Please contact us for more details.
Note 2: With regard to the voltages and frequencies in bold letters, an "X" will be added to the end of the product name
Note 3: For voltages not listed above, please contact your nearest Sales Office or the CS Center.

● CCC

Number of Phases	Motor Power	Voltage (V)/Frequency (Hz)
3-Phase	15 W to 90 W	200 V/50 Hz, 200 V/60 Hz, 220 V/60 Hz **220 V/50 Hz, 230 V/50 Hz** 380 V/50 Hz, 400 V/50 Hz, 400 V/60 Hz 440 V/60 Hz
1-Phase	15 W to 90 W	100 V/50 Hz, 100 V/60 Hz 200 V/50 Hz, 200 V/60 Hz **220 V/50 Hz, 230 V/50 Hz**

Note 1: With regard to the voltages and frequencies in bold letters, an "X" will be added to the end of the product name
Note 2: For voltages not listed above, please contact your nearest Sales Office or the CS Center.
Note 3: The standard power supplies in China are 220 V/50 Hz or 380 V/50 Hz in general.

● CE

Number of Phases	Motor Power	Voltage (V)/Frequency (Hz)
3-Phase	15 W to 90 W	200 V/50 Hz, 200 V/60 Hz, 220 V/60 Hz **220 V/50 Hz** **230 V/50 Hz** 380 V/50 Hz, 400 V/50 Hz, 400 V/60 Hz 440 V/60 Hz **415 V/50 Hz**(*) **420 V/50 Hz**(*) **440 V/50 Hz**(*)
1-Phase	15 W to 90 W	100 V/50 Hz, 100 V/60 Hz 200 V/50 Hz, 200 V/60 Hz **220 V/50 Hz** **230 V/50 Hz**

Note 1: The voltages marked with (*) are not available for some models with motor powers of 15 W and 25 W. Please contact us for more details.
Note 2: With regard to the voltages and frequencies in bold letters, an "X" will be added to the end of the product name
Note 3: For voltages not listed above, please contact your nearest Sales Office or the CS Center.

■ IP65 Gearmotors/IP65 Gearmotors with Brake

● UL

Number of Phases	Motor Power	Voltage (V)/Frequency (Hz)
3-Phase	15 W to 90 W	200 V/50 Hz, 200 V/60 Hz, 220 V/60 Hz **208 V/60 Hz, 230 V/60 Hz**
1-Phase	15 W to 60 W	100 V/50 Hz, 100 V/60 Hz **115 V/60 Hz** **200 V/50 Hz, 200 V/60 Hz** **220 V/60 Hz** **230 V/60 Hz**

Note 1: With regard to the voltages and frequencies in bold letters, an "X" will be added to the end of the product name
Note 2: For voltages not listed above, please contact your nearest Sales Office or the CS Center.

● CE

Number of Phases	Motor Power	Voltage (V)/Frequency (Hz)
3-Phase	15 W to 90 W	200 V/50 Hz, 200 V/60 Hz, 220 V/60 Hz **220 V/50 Hz** **230 V/50 Hz** (Note 3)
1-Phase	15 W to 60 W	100 V/50 Hz, 100 V/60 Hz **200 V/50 Hz, 200 V/60 Hz** **220 V/50 Hz** **230 V/50 Hz** (Note 3)

Note 1: With regard to the voltages and frequencies in bold letters, an "X" will be added to the end of the product name
Note 2: For voltages not listed above, please contact your nearest Sales Office or the CS Center.
Note 3: Depending on the motor power, some models may not be available

MID Series

Voltage and Certification Code	Description	Voltage/Frequency	Compatible Standard
NN	Standard Voltage (Same as Japanese Domestic Type)	200 V/50 Hz, 200 V/60 Hz, 220 V/60 Hz	UL/CE/CCC
WN	High Voltage (400 V Class) (Same as Japanese Domestic Type)	380 V/50 Hz, 400 V/50 Hz, 400 V/60 Hz, 440 V/60 Hz	UL/CE/CCC
KN	Special voltage (dual voltage) for South Korea/Taiwan	220 V/60 Hz, 380 V/60 Hz	UL/CE/CCC
CN	Special voltage (dual voltage) for China	220 V/50 Hz, 230 V/50 Hz, 380 V/50 Hz	UL/CE/CCC
DN	Special voltage (dual voltage) for China/South Korea/Taiwan	220 V/50 Hz, 220 V/60 Hz, 380 V/50 Hz, 380 V/60 Hz	UL/CE/CCC
EN	Special voltage for Europe/North America	415 V/50 Hz, 440 V/50 Hz, 480 V/60 Hz	UL/cUL/CE/CCC
UN	Special voltage (dual voltage) for North America/Europe	230 V/60 Hz, 460 V/60 Hz, 400 V/50 Hz	UL/cUL/CE/CCC
AN	Special voltage (dual voltage) for North America/Europe	208 V/60 Hz, 230 V/60 Hz, 460 V/60 Hz, 400 V/50 Hz	UL/cUL/CE/CCC
MA	Special voltage for Canada	575 V/60 Hz	UL/cUL

Global Standards of Each Country

1. U.S.A.

● Safety Certification

<Applicable Standard and UL File>

○: Available ×: Not available -: No lineup

Number of Phases	Applicable Standard	Acquired UL File	Our Corresponding Power	Power Supply/Certification Model								
				NN	WN	KN	CN	DN	EN	UN	AN	MA
3-Phase	UL1004-1 (Standard for Rotating Electrical Machines – General Requirements)	PRGY2. E172621	0.1 kW to 0.4 kW	○	○	○	○	○	○	-	○	○
			0.75 kW	○	○	○	○	○	○	○	-	○
			1.5 kW	○	○	○	○	-	○	○	-	○
			2.2 kW	○	○	○	○	-	○	○	-	○

● High Efficiency Regulation

○: Available ×: Not available -: No lineup

Number of Phases	Applicable Standard	Acquired UL File	Our Corresponding Power	Power Supply/Certification Model								
				NN	WN	KN	CN	DN	EN	UN	AN	MA
3-Phase	NEMA MG1-12-12	ZWKG. E172621	0.75 kW	○	○	○	○	○	○	○	-	○
			1.5 kW	○	○	○	○	-	○	○	-	○
			2.2 kW	○	○	○	○	-	○	○	-	○

2. Canada

● Safety Certification

<Applicable Standard and UL File>

○: Available ×: Not available -: No lineup

Number of Phases	Applicable Standard	Acquired UL File	Our Corresponding Power	Power Supply/Certification Model								
				NN	WN	KN	CN	DN	EN	UN	AN	MA
3-Phase	C22.2 No.100 (Motors and Gearmotors)	PRGY8. E172621	0.1 kW to 0.4 kW	○	○	○	○	○	○	-	○	○
			0.75 kW	×	×	×	×	×	○	○	-	○
			1.5 kW	×	×	×	×	-	○	○	-	○
			2.2 kW	×	×	×	×	-	○	○	-	○

● High Efficiency Regulation

○: Available ×: Not available -: No lineup

Number of Phases	Applicable Standard	Acquired UL File	Our Corresponding Power	Power Supply/Certification Model								
				NN	WN	KN	CN	DN	EN	UN	AN	MA
3-Phase	CSA C390	ZYKH. E172621	0.75 kW	×	×	×	×	×	○	○	-	○
			1.5 kW	×	×	×	×	-	○	○	-	○
			2.2 kW	×	×	×	×	-	○	○	-	○

3. Europe

● Safety Certification

○: Available ×: Not available -: No lineup

Number of Phases	EU Directive	Applicable Standard	Our Corresponding Power	Power Supply/Certification Model								
				NN	WN	KN	CN	DN	EN	UN	AN	MA
3-Phase	Low Voltage Directive 2014/35/EU Low Voltage Command	EN60034-1: Rotating electrical machines - Part 1 - Ratings and characteristics EN60034-5: Rotating electrical machines - Part 5 - Classification of degrees of protection provided by the integral design of rotating electrical machines (IP code)	0.1 kW to 0.4 kW	○	○	○	○	○	○	-	○	×
			0.75 kW	○	○	○	○	○	○	○	-	×
			1.5 kW	○	○	○	○	-	○	○	-	×
			2.2 kW	○	○	○	○	-	○	○	-	×

● High Efficiency Regulation

○: Available ×: Not available -: No lineup

Number of Phases	Applicable Standard	Our Corresponding Power	Power Supply/Certification Model								
			NN	WN	KN	CN	DN	EN	UN	AN	MA
3-Phase	COMMISSION REGULATION (EU) 2019/1781	0.2 kW to 0.4 kW	○	○	○	○	○	○	-	○	×
		0.75 kW	○	○	○	○	○	○	○	-	×
		1.5 kW	○	○	○	○	-	○	○	-	×
		2.2 kW	○	○	○	○	-	○	○	-	×

4. China

● Safety Certification

○: Available ×: Not available -: No lineup

Number of Phases	Applicable Standard	Our Corresponding Power	Power Supply/Certification Model								
			NN	WN	KN	CN	DN	EN	UN	AN	MA
3-Phase	GB/T12350-2022 Small power motor safety requirements	0.1 kW to 0.4 kW	○	○	○	○	○	○	-	○	×
		0.75 kW	○	○	○	○	○	○	○	-	×

● High Efficiency Regulation

○: Available ×: Not available -: No lineup

Number of Phases	Applicable Standard	Our Corresponding Power	Power Supply/Certification Model								
			NN	WN	KN	CN	DN	EN	UN	AN	MA
3-Phase	GB18613-2020 Minimum allowable values of energy efficiency and values of efficiency grades for motors	0.2 kW to 0.4 kW	○(*)	×	×	×	○(*)	×	-	×	×
		0.75 kW	○	○	○	○	○	○	○	-	×
		1.5 kW	○	○	○	○	-	○	○	-	×
		2.2 kW	○	○	○	○	-	○	○	-	×

"*" is available on special order.

5. South Korea

● High Efficiency Regulation

○: Available ×: Not available -: No lineup

Number of Phases	Applicable Standard	Our Corresponding Power	Power Supply/Certification Model								
			NN	WN	KN	CN	DN	EN	UN	AN	MA
3-Phase	KS C 4202	0.75 kW	○	○	○	×	○	×	×	-	×
		1.5 kW	○	○	○	×	-	×	×	-	×
		2.2 kW	○	○	○	×	-	×	×	-	×

Global Standard Gearmotors Model and Type Code

MINI Series

MINI Series global standard gearmotors (15 W to 90 W) are classified with codes as shown below. Place orders or make inquiries with these codes. Please note that the specifications of these gearmotors are different from domestic specifications.

Mounting Type	Frame Size	Shaft Arrangement	Reduction Ratio		Standards	Number of Phases	Motor Type Ⓐ	Motor Type Ⓑ	Power	Voltage Frequency	Terminal Box	Option	Option Code
GL	12	N	015	-	U	T	M	L	15	N	C		
HL	40	L	12X	-	Y	S	B	Y	90	W	C	X	HZ
F2S	15	N	120	-	Y	T	WB	R	40	N	N		
F2F	18	T	240	-	C	S	M	R	60	W	T		
①	②	③	④		⑤	⑥	⑦	⑧	⑨	⑩	⑪	⑫	⑬

①Mounting Type	GL	: G Type (Parallel Shaft), Foot Mount Type
	GF	: G Type (Parallel Shaft), Flange Mount Type
	GK	: G Type (Parallel Shaft), Small Flange Mount Type
	HL	: H Type (Right Angle Shaft), Foot Mount Type
	HF	: H Type (Right Angle Shaft), Flange Mount Type (Frame Size Up to 22)
	F2S	: F2 Type (Concentric Right Angle Hollow Bore)
	F2F	: F2 Type (Concentric Right Angle Shaft)
②Frame Size and Output Shaft Diameter	Output Shaft Diameter (internal diameter for right angle hollow bore types, and outer diameter for other types)	
③Shaft Arrangement Only HL, HF, and F2F For models other than those mentioned above, "N" will be indicated. (The F2F is not provided with an R shaft.)	L: Viewing from the input shaft, output shaft would be on the left side 	R: Viewing from the input shaft, output shaft would be on the right side 	T: Viewing from the input shaft, the output shaft would be on the both sides 
④Reduction Ratio (All reduction ratios are indicated with three digits.)	005: 1/5 to 18X: 1/1800 (10 → 010, 1200 → 12X)		
⑤Standard	U	: UL Standard Product (UL, cUL)
	Y	: Product with CE Marking
	C	: CCC-certified Product
⑥Number of Phases	T	: 3-Phase
	S	: 1-Phase
⑦Motor Type Ⓐ (Note 1)	M	: With Motor
	B	: Brakemotor
	WM	: With IP65 Motor (Note 1)
	WB	: With IP65 Brakemotor (Note 1)
⑧ ⑨Motor Type Ⓑ and Power (Note 2)	L15	: 15 W G-12, G-22, H-15, H-22, F2S-12, F2F-15
	L25	: 25 W G-12, G-22, H-15, H-22, F2S-12, F2F-15
	R25	: 25 W G-15, G-28, H-28
	R40	: 40 W G-15, G-28, G-32, H-18, H-28, H-32, F2S-15, F2F-18
	Y40	: 40 W G-18
	R60	: 60 W G-15, G-28, G-32, H-18, H-28, H-32, F2S-15, F2F-18
	Y60	: 60 W G-18
	R90	: 90 W G-15, G-28, G-32, H-18, H-28, H-32, F2S-15, F2F-18
	Y90	: 90 W G-18, G-40, H-40
⑩Voltage/Frequency	N	: Standard Voltage 3-Phase: 200 V/50 Hz, 200 V/60 Hz, 220 V/60 Hz 1-Phase: 100 V/50 Hz, 100 V/60 Hz
	W	: High Voltage 3-Phase: 380 V/50 Hz, 400 V/50 Hz, 400 V/60 Hz, 440 V/60 Hz 1-Phase: 200 V/50 Hz, 200 V/60 Hz
⑪Terminal Box (Note 3)	UL	C : C Type Terminal Box without Terminal Block, Made of Resin
		A : A Type Terminal Box without Terminal Block, Made of Aluminum
		N : Without Terminal Box (Flying Leads, Water-Resistant Cabtyre Cable)
	CE CCC	T : T Type Terminal Box
		K : K Type Terminal Box
		C : C Type Terminal Box with Built-in Rectifier, Dedicated to Brakemotor
		A : A Type Terminal Box (non-compliant with CCC Standard)
		Z : Z Type Terminal Box (non-compliant with CCC Standard)
		N : Without Terminal Box (Flying Leads, Water-Resistant Cabtyre Cable)
⑫Option	Blank: Standard Specification	
	X	: Special Specification Code
⑬Option Code (Note 4)	Terminal Box/Lead Wire Position Codes Please refer to the list of option codes on page 581 for details.	

Note 1: Water-resistant type CCC-compliant products are not available.
Note 2: Please note that models are classified by type and frame size.
Note 3: Specifications are different among certification standards. Be sure to read pages 594 to 595 and examine the specifications.
Note 4: The option code will not be shown in the product nomenclature on the nameplate. But it will be shown in the Option code row of the nameplate.
Note 5: Some frame sizes are different from domestic standard products. For details, please refer to the standard motor model lineup on pages 604 to 607.
Note 6: Safety certification standard is obtained by the motor unit model.
[Example] GL12N015-UTML15NC → Registered model UTML15NC
Note 7: For conversions from domestic models, please refer to the conversion table on page 599.

MID Series

Gearhead Type					Motor Type							Brake Specifications	Option	
Mounting Type	Frame Size	Shaft Arrangement	Reduction Ratio		Motor Type	Motor Specifications	Power	Number of Phases	Supply Voltage	Standards	Terminal Box	Brake Specifications	Option	Option Code
G3L	18	N	5	-	M	M	02	T	M	A	T	N		
H2F	22	H	25	-	W	M	01	T	W	N	E	V4	X	AA
FF	32	L	80	-	M	M	04	T	C	N	T	B4		
F3S	30	N	7	-	M	R	08	T	A	N	T	B2	X	T9HZ
①	②	③	④		⑤	⑥	⑦	⑧	⑨	⑩	⑪	⑫	⑬	⑭

①Mounting Type	G3L : G3 Type (Parallel Shaft), Foot Mount Type GAL : GA Type (Parallel Shaft), Foot Mount Type G3F : G3 Type (Parallel Shaft), Flange Mount Type G3K : G3 Type (Parallel Shaft), Small Flange Mount Type H2L : H2 Type (Right Angle Shaft), Foot Mount Type H2F : H2 Type (Right Angle Shaft), Flange Mount Type FS : F Type (Right Angle Hollow Bore) (Frame size 55 is cast iron only) FAS : FA type (hollow bore) (Frame size 55 is only) FF : F Type (Right Angle Shaft) F3S : F3 Type (Concentric Right Angle Hollow Bore) F3F : F3 Type (Concentric Right Angle Shaft)					
②Frame Size and Output Shaft Diameter	Solid Shaft: OD Hollow Bore Shaft: ID					
③Shaft Arrangement	Shaft Arrangement		Parallel Shaft Right Angle Hollow Bore Concentric Right Angle Hollow Bore	Right Angle Shaft, Right Angle Shaft, Concentric Right Angle Shaft		
				Viewing from the input shaft, output shaft would be on the left side 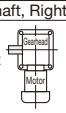	Viewing from the input shaft, output shaft would be on the right side 	Viewing from the input shaft, the output shaft would be on the both sides 
	Material	Carbon Steel	N	L	R	T
		Stainless Steel	S	H	M	B
④Reduction Ratio	5: 1/5 to 15X: 1/1500					
⑤Motor Type	M : Standard Induction Motor (IP40 or IP44) W : IP65 Induction Motor					
⑥Motor Specifications (Note 1)	M : IE1 Efficiency Ins. F (0.1 kW) IE2 Efficiency Ins. F (0.2 kW to 0.4 kW) R : IE3 Efficiency Ins. F (0.75 kW to 2.2 kW)					
⑦Motor Power (Note 2)	01 : 3-Phase 0.1 kW 02 : 3-Phase 0.2 kW 04 : 3-Phase 0.4 kW 08 : 3-Phase 0.75 kW 15 : 3-Phase 1.5 kW 22 : 3-Phase 2.2 kW					
⑧Number of Phases	T : 3-Phase					
⑨Voltage	N : 200 V/50 Hz, 200 V/60 Hz, 220 V/60 Hz W : 380 V/50 Hz, 400 V/50 Hz, 400 V/60 Hz, 440 V/60 Hz K : 220 V/60 Hz, 380 V/60 Hz C : 220 V/50 Hz, 230 V/60 Hz, 380 V/50 Hz D : 220 V/50 Hz, 220 V/60 Hz, 380 V/50 Hz, 380 V/60 Hz E : 415 V/50 Hz, 440 V/50 Hz, 480 V/60 Hz U : 230 V/60 Hz, 460 V/60 Hz, 400 V/50 Hz A : 208 V/60 Hz, 230 V/60 Hz, 460 V/60 Hz, 400 V/50 Hz M : 575 V/60 Hz					
⑩Standards	N : CE, UL, CCC A : UL * Supply Voltage: M (575 V/60 Hz) only					
⑪Terminal Box	T : T Type Terminal Box (Steel Plate) E : E Type Terminal Box (Aluminum) (IP65 Induction Motor) N : No Terminal Box (Lead wire type)					
⑫Brake Specifications	Corresponding Motor Type (Refer to ⑥.)		Brake Specification			
	M : Induction Standard Motor		N : No Brake			
			B2 : 200 V Class Brake			
			B4 : 400 V Class Brake			
			J2 : 200 V Brake Motor with Manual Brake Release Lever (optional)			
			J4 : 400 V Brake Motor with Manual Brake Release Lever (optional)			
	W : Induction IP65 Motor		N : No Brake			
			V2 : IP65 200 V Class Brake			
			V4 : IP65 400 V Class Brake			
⑬Option	Blank : Standard Specification X : Special Specification Code					
⑭Option Code	Built-in Rectifier Connection Code For details, please refer to the list of option codes on page 561.					
	Terminal Box Position Code For details, please refer to the list of option codes on page 582.					
	Please refer to the option code list on page 1012 for codes used for other special options.					

Note 1: For CCC Standard, 0.2 kW and 0.4 kW are certified under limited duty cycle. Please be cautious upon selecting the product.
Note 2: GA and FA types are available only in 0.4 kW to 2.2 kW.

Details of Global Standard Models

MINI Series

■ Product models compliant with global standards

- Product models compliant with global standards are different from domestic standard specifications. When placing an order for a product, it is required to order under the global standard model. Select a product of domestic specifications of equivalent items (power, reduction ratio, motor type, etc.) from this catalog, and convert the model into the corresponding product model compliant with global standards by referring to the figure shown below.
- Although the dimensions, performance, etc. of a product model compliant with global standards are the same as those of a product of domestic specifications, the frame sizes (output shaft diameters) of some models are changed, and their dimensions are different from those of products of domestic dimensions. Please refer to page 602 for the applicable models.

■ Major precautions about model conversion

- The model is expressed by separating the gearbox unit and the motor unit.
- All reduction ratios are displayed with three digits, unlike the conventional form. [Example] 5 → 005, 1200 → 12X

● Example of Part Number Conversion

Domestic Specification

Part Number	Motor Type		Frame Size	Shaft Arrangement		Reduction Ratio		Number of Phases	Power	Option		Option	Option Code
GL	M	–	12		–	015	–	T	15		T		
HL	MN	–	40	L	–	1200	–	S	90	W	C	X	HZ
F2S	B	–	15		–	120	–	T	40		C	X	T6
F2F	M	–	18	T	–	240	–	S	60	W	T		

Standard Product Type

	Part Number	Frame Size	Shaft Arrangement	Reduction Ratio		Standards	Number of Phases	Motor Type Ⓐ	Motor Type Ⓑ	Power	Voltage Frequency	Terminal Box	Option	Option Code
CCC	GL	12	N	015	–	C	T	M	L	15	N	T		
UL	HL	40	L	12X	–	U	S	B	Y	90	W	C	X	HZ
CCC	F2S	15	N	120	–	C	T	B	R	40	N	C	X	T6
CE	F2F	18	T	240	–	Y	S	M	R	60	W	T		

MID Series

■ Models compliant with global standards are classified as shown below by supply voltage.

(Model example)

Gearbox Unit (common to all standards)					Motor Unit (Each standard is classified with a combination of a supply voltage code and a certification code.)							
Mounting Type	Frame Size	Shaft Arrangement	Reduction Ratio		Motor Type	Motor Specifications	Power	Number of Phases	Power Supply Voltage	Standard	Terminal Box	Brake
G3L	22	N	30	–	M	M	04	T	N	N	T	N
									W	N		
									K	N		
									C	N		
									D	N		
									E	N		
									U	N		
									A	N		
									M	A		

■ Details of compliance with standards

Voltage and Certification Code	Description	Voltage/Frequency	Compatible Standard
NN	Standard Voltage (Same as Japanese Domestic Type)	200 V/50 Hz, 200 V/60 Hz, 220 V/60 Hz	UL/CE/CCC
WN	High Voltage (400 V Class) (Same as Japanese Domestic Type)	380 V/50 Hz, 400 V/50 Hz, 400 V/60 Hz, 440 V/60 Hz	UL/CE/CCC
KN	Special voltage (dual voltage) for South Korea/Taiwan	220 V/60 Hz, 380 V/60 Hz	UL/CE/CCC
CN	Special voltage (dual voltage) for China	220 V/50 Hz, 230 V/50 Hz, 380 V/50 Hz	UL/CE/CCC
DN	Special voltage (dual voltage) for China/South Korea/Taiwan	220 V/50 Hz, 220 V/60 Hz, 380 V/50 Hz, 380 V/60 Hz	UL/CE/CCC
EN	Special voltage for Europe/North America	415 V/50 Hz, 440 V/50 Hz, 480 V/60 Hz	UL/cUL/CE/CCC
UN	Special voltage (dual voltage) for North America/Europe	230 V/60 Hz, 460 V/60 Hz, 400 V/50 Hz	UL/cUL/CE/CCC
AN	Special voltage (dual voltage) for North America/Europe	208 V/60 Hz, 230 V/60 Hz, 460 V/60 Hz, 400 V/50 Hz	UL/cUL/CE/CCC
MA	Special voltage for Canada	575 V/60 Hz	UL/cUL

Nameplate

MINI Series

● UL

3-Phase

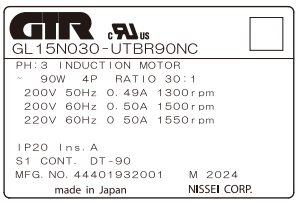

1-Phase

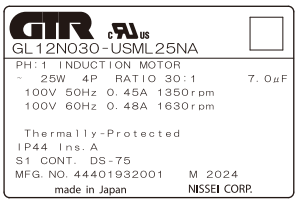

● CE

3-Phase

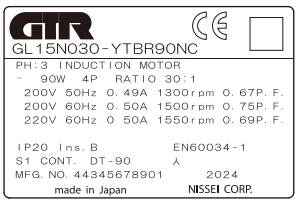

1-Phase

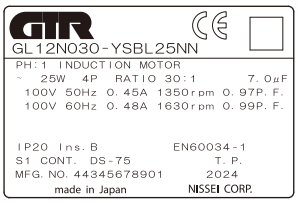

● CCC

3-Phase

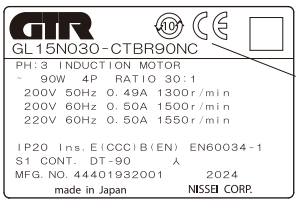

CE Marking will be displayed.
A seal (CCC) will also be displayed besides the nameplate.

1-Phase

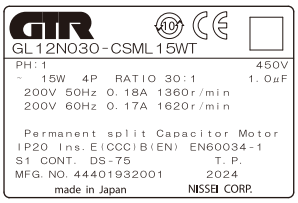

MID Series

Power	Power Supply/Certification Model								
	NN	WN	KN	CN	DN	AN	UN	EN	MA
0.1 kW	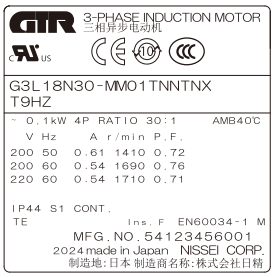								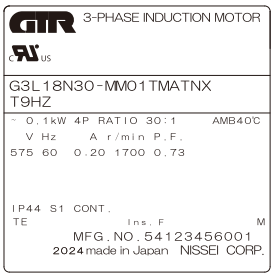
0.2 kW,0.4 kW	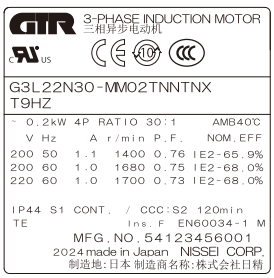								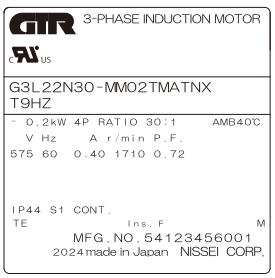
0.75 kW	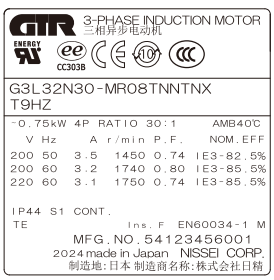								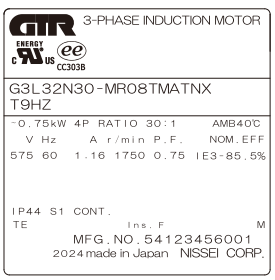
1.5 kW, 2.2 kW	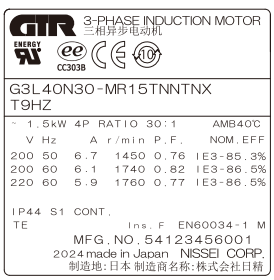								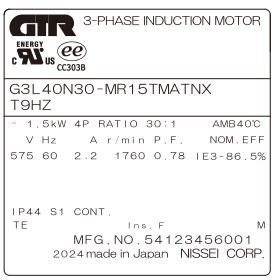

Global Standard Gearmotors Specifications/Terminal Box

MINI Series

■ Specifications of terminal box <UL>

● Indoor specifications

Power	Specifications	Flying Leads	Terminal Box Type	
			C-BOX	A-BOX
15 W to 90 W	No Brake	○	○	○
	Brakemotor	○	○	○

Note 1: The C-Type terminal box is made of resin, and the A-Type terminal box is made of aluminum.Select one or the other if a gearmotor with a terminal box is required.
Note 2: Neither the C Type terminal box nor the A Type terminal box is provided with a terminal block. In the case of a gearmotor with a brake, the brake lead wires are drawn into the terminal box.
Note 3: When the voltage exceeds 220 V, the 200 V terminal (red lead wire) is separately drawn out of the motor.
Note 4: For water-resistant types, a cabtyre cable is used as is the case with gearmotors of domestic specifications.

<C Type Terminal Box (Resin)>
3-Phase and 1-Phase 15 W to 90 W

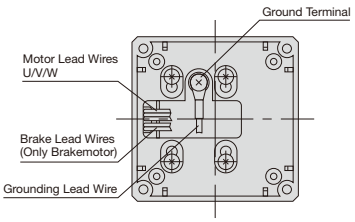

<A Type Terminal Box (Aluminum)>
3-Phase and 1-Phase 15 W to 90 W

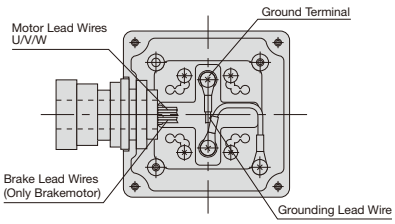

■ Terminal Box Specifications <CE, CCC>

Power	Specifications	Flying Leads	Terminal Box Type				
			T Type	K Type	C Type	A Type	Z Type
15W to 90W	No Brake	○	○	○	×	○	×
	Brakemotor	○	○	○	○	○	○

Note 1: The specifications of both gearmotors with flaying leads and gearmotors with a terminal box are the same as domestic standard specifications. Please refer to page 603 for details.
Note 2: When the voltage exceeds 220 V, the 200 V terminal (red lead wire) is separately drawn out of the motor.
Note 3: For water-resistant types, a cabtyre cable is used as is the case with gearmotors of domestic specifications.
Note 4: Gearmotors with a 400 V class voltage are not available with flying leads. Designate a gearbox with a terminal box.
Note 5: A Type and Z Type terminal boxes are not compliant with the CCC Standard.

■ Please note that products described below will differ in frame size (output shaft diameter and mounting dimensions) from that of the domestic model.

Type	Motor Designation	Reduction Ratio	Domestic Specification Frame Size	Global Standard Product Frame Size
G	T40, T40W, S40, S40W	5, 7.5, 10, 15, 20, 25, 30, 40, 50, 60	12	15
		300, 375, 450	22	28
	T60	5, 7.5, 10, 15, 20, 25, 30	12	15
		300, 375, 450	22	28
	T60W, S60, S60W	300, 375, 450	22	28
H	T40, T40W, S40, S40W	10, 15, 20, 25, 30, 40, 50, 60, 80, 100, 120	15	18
		300, 375, 450	22	28
	T60	10, 15, 20, 25, 30, 40, 50, 60	15	18
		300, 375, 450	22	28
	T60W, S60, S60W	300, 375, 450	22	28
F2S	T40, T40W, S40, S40W	10, 15, 20, 25, 30, 40, 50, 60, 80, 100, 120	12	15
	T60	10, 15, 20, 25, 30, 40, 50, 60	12	15
F2F	T40, T40W, S40, S40W	10, 15, 20, 25, 30, 40, 50, 60, 80, 100, 120	15	18
	T60	10, 15, 20, 25, 30, 40, 50, 60	15	18

Note 1: The frame size represents the internal diameter of the output shaft in the case of the F2S and external diameter of the output shaft for the rest.
Note 2: Please refer to the standard gearmotor model lineup on pages 604 to 607 as well.
If you have any questions, please contact your nearest Sales Office or the CS Center.

■ CE, CCC

● Types and Structures

<T Type Terminal Box>

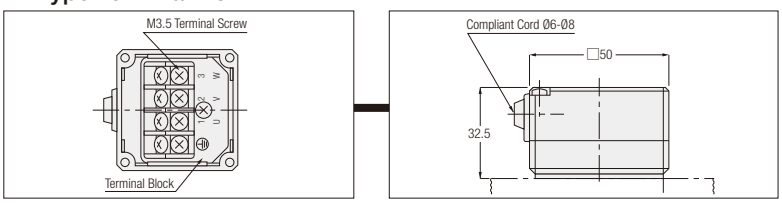

<K Type Terminal Box>

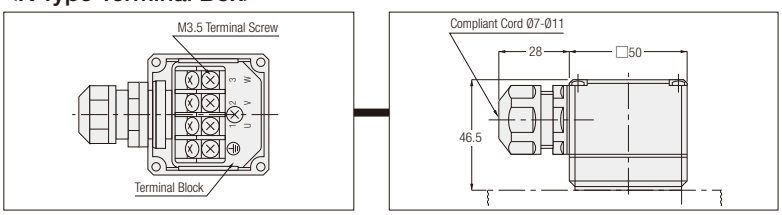

<C Type Terminal Box (with Built-in Rectifier)>

3-Phase

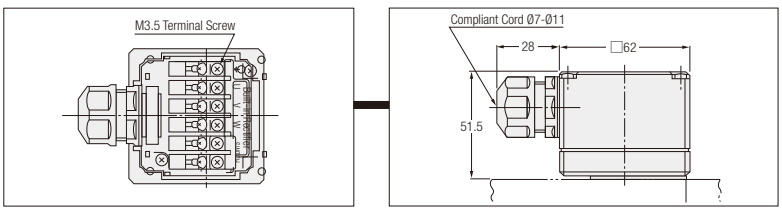

1-Phase

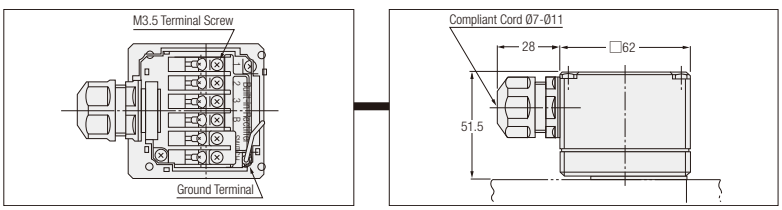

<A Type Terminal Box (Aluminum) Incompliant with CCC Standard>

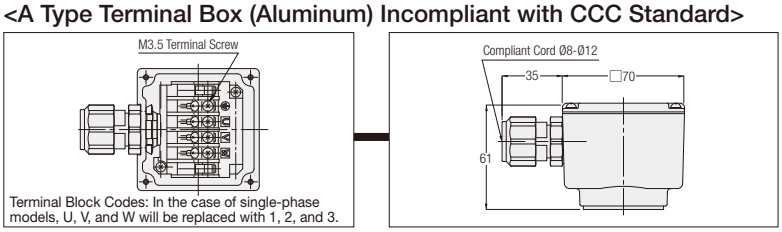

Terminal Block Codes: In the case of single-phase models, U, V, and W will be replaced with 1, 2, and 3.

<Z Type Terminal Box (Aluminum) Incompliant with CCC Standard>

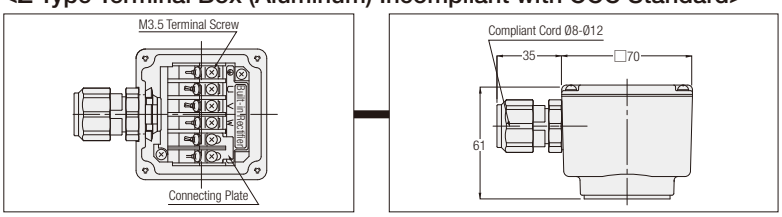

Global Standard Gearmotors Model Lineup

MINI Series <G Type>

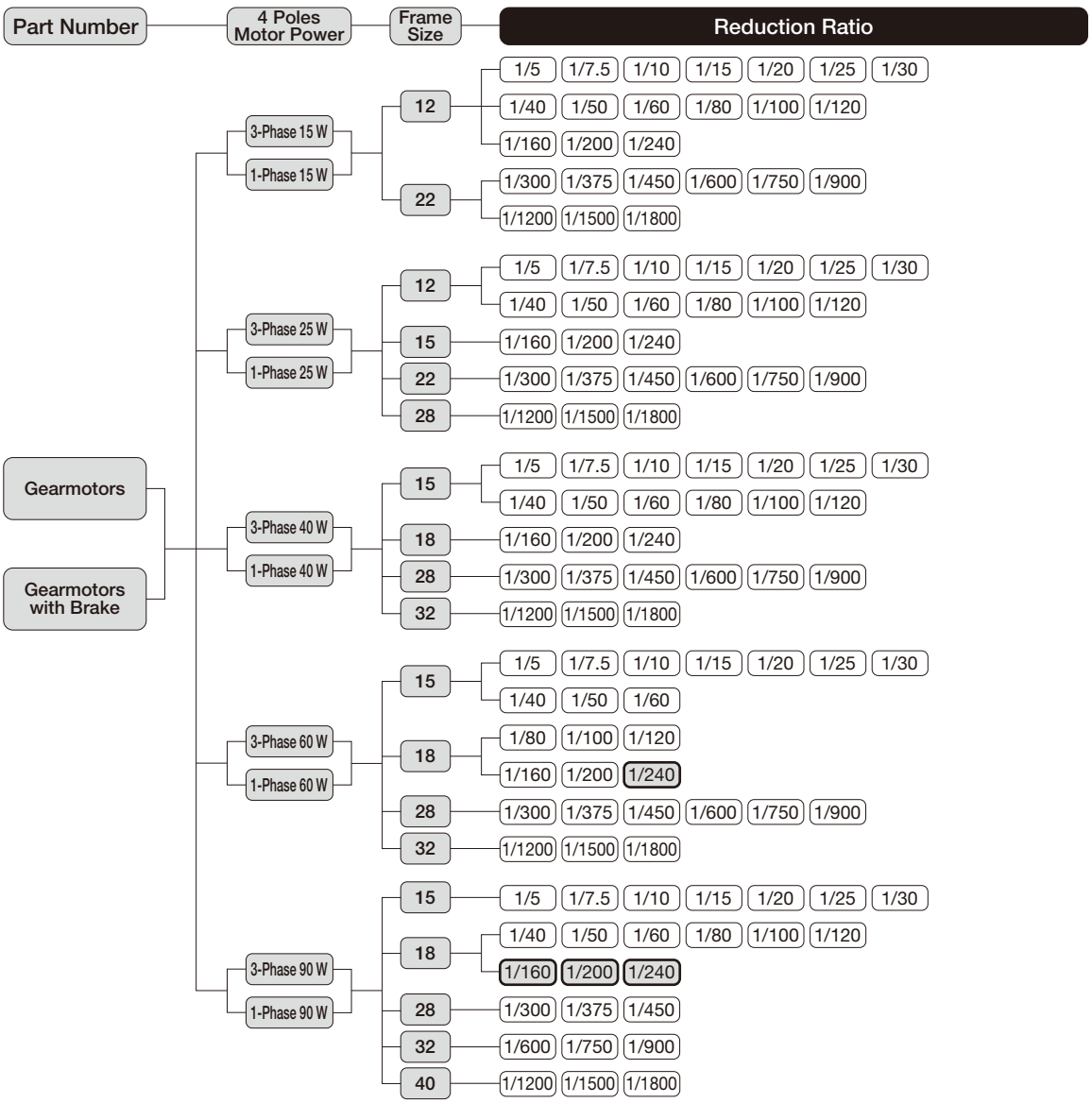

Note 1: The G Type is available in three types: Foot mount type, Flange mount type, and Small flange mount type with a frame size between 22 and 32.
Note 2: ⬭ indicates a limited torque type. Please make sure to check the allowable output shaft torque in the performance table.

MINI Series <H Type>

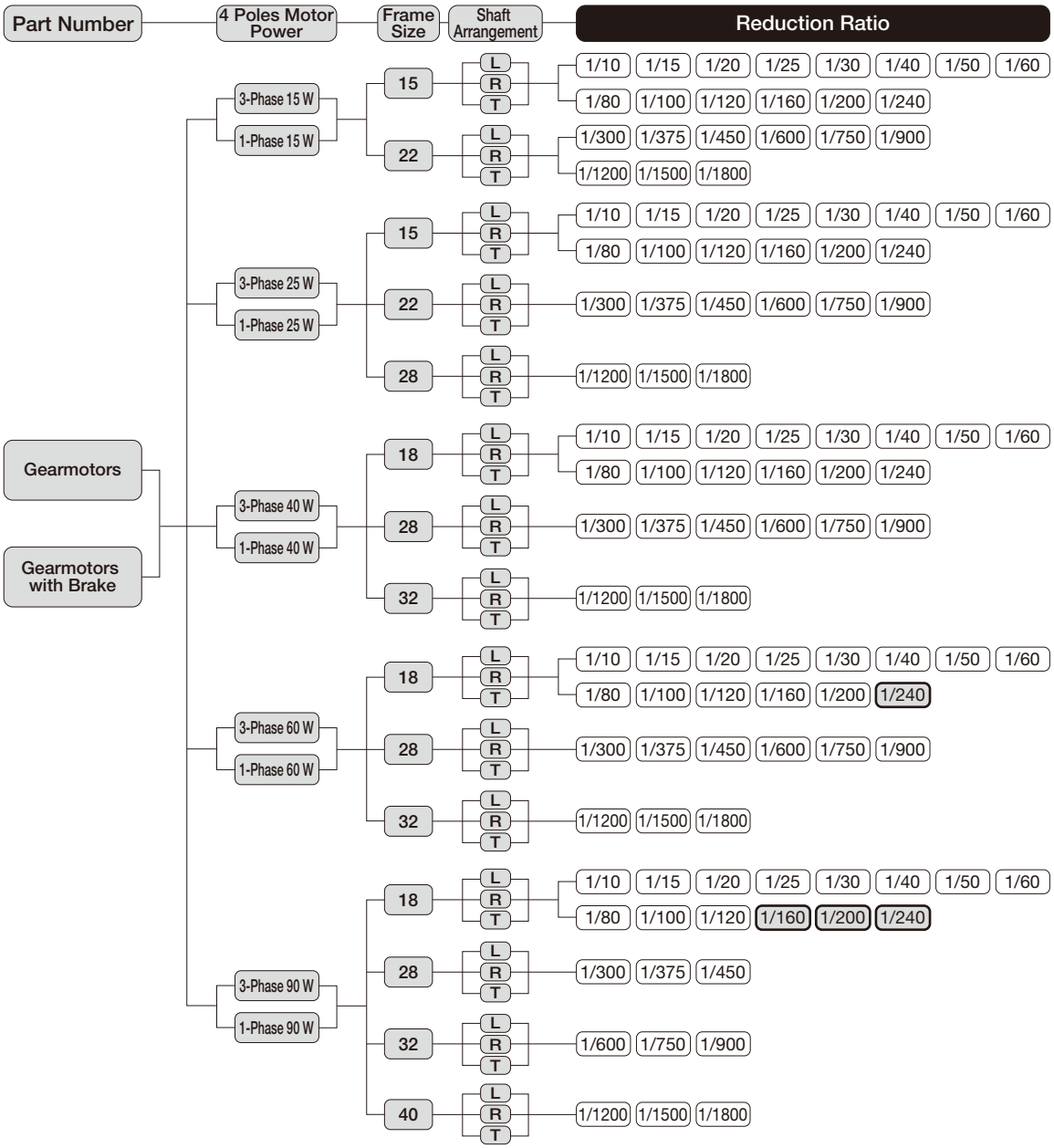

Note 1: The frame sizes of flange mount types are 15, 18, and 22. (Frame sizes 28, 32, and 40 are not available.)
Note 2: ( ) indicates a limited torque type. Please make sure to check the allowable output shaft torque in the performance table.

MINI Series <Concentric Right Angle Hollow Bore/F2S Type>

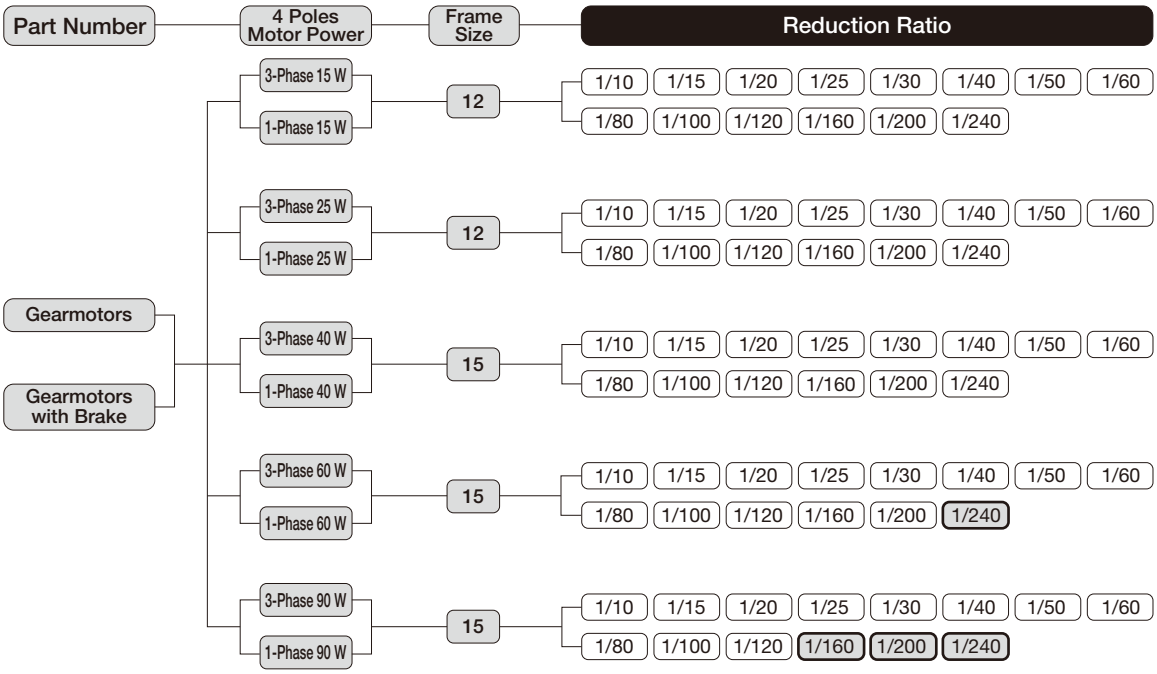

Note: ⬭ indicates a limited torque type. Please make sure to check the allowable output shaft torque in the performance table.

MINI Series <Concentric Right Angle Shaft/F2F Type>

Part Number	4 Poles Motor Power	Frame Size	Shaft Arrangement	Reduction Ratio
Gearmotors / Gearmotors with Brake	3-Phase 15 W / 1-Phase 15 W	15	L / T	1/10 1/15 1/20 1/25 1/30 1/40 1/50 1/60 / 1/80 1/100 1/120 1/160 1/200 1/240
	3-Phase 25 W / 1-Phase 25 W	15	L / T	1/10 1/15 1/20 1/25 1/30 1/40 1/50 1/60 / 1/80 1/100 1/120 1/160 1/200 1/240
	3-Phase 40 W / 1-Phase 40 W	18	L / T	1/10 1/15 1/20 1/25 1/30 1/40 1/50 1/60 / 1/80 1/100 1/120 1/160 1/200 1/240
	3-Phase 60 W / 1-Phase 60 W	18	L / T	1/10 1/15 1/20 1/25 1/30 1/40 1/50 1/60 / 1/80 1/100 1/120 1/160 1/200 **1/240**
	3-Phase 90 W / 1-Phase 90 W	18	L / T	1/10 1/15 1/20 1/25 1/30 1/40 1/50 1/60 / 1/80 1/100 1/120 **1/160** **1/200** **1/240**

Note: ⬭ indicates a limited torque type. Please make sure to check the allowable output shaft torque in the performance table.

■ F2F (right angle shaft) shaft arrangement

The L shaft of the F2F (concentric right angle shaft) is as shown in [Figure-1]. The F2 type is designed for concentric flange mounting on both sides, and the output shaft can therefore be positioned on the right side as shown in [Figure-2] by rotating the gearmotor to 180 °. In this case, however, the terminal box will be on the lower side. If you wish to set the terminal box in the upper position for the convenience of use, place an order for the terminal box lower side (option code “T6”) for a standard product [Figure-1]. By rotating the gearmotor to 180 ° in this state, the output shaft will be positioned on the right side with the terminal box in the upper position. Please refer to page 581 for positional changes of terminal boxes.

Figure when viewed from the motor side

When the output shaft is an L shaft, it is on the left side when viewed from the motor side with the terminal box in the upper position.

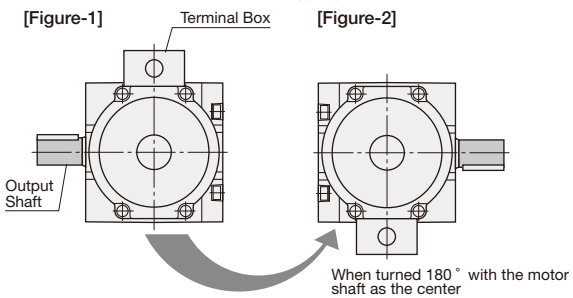

MID Series <G3 Type>

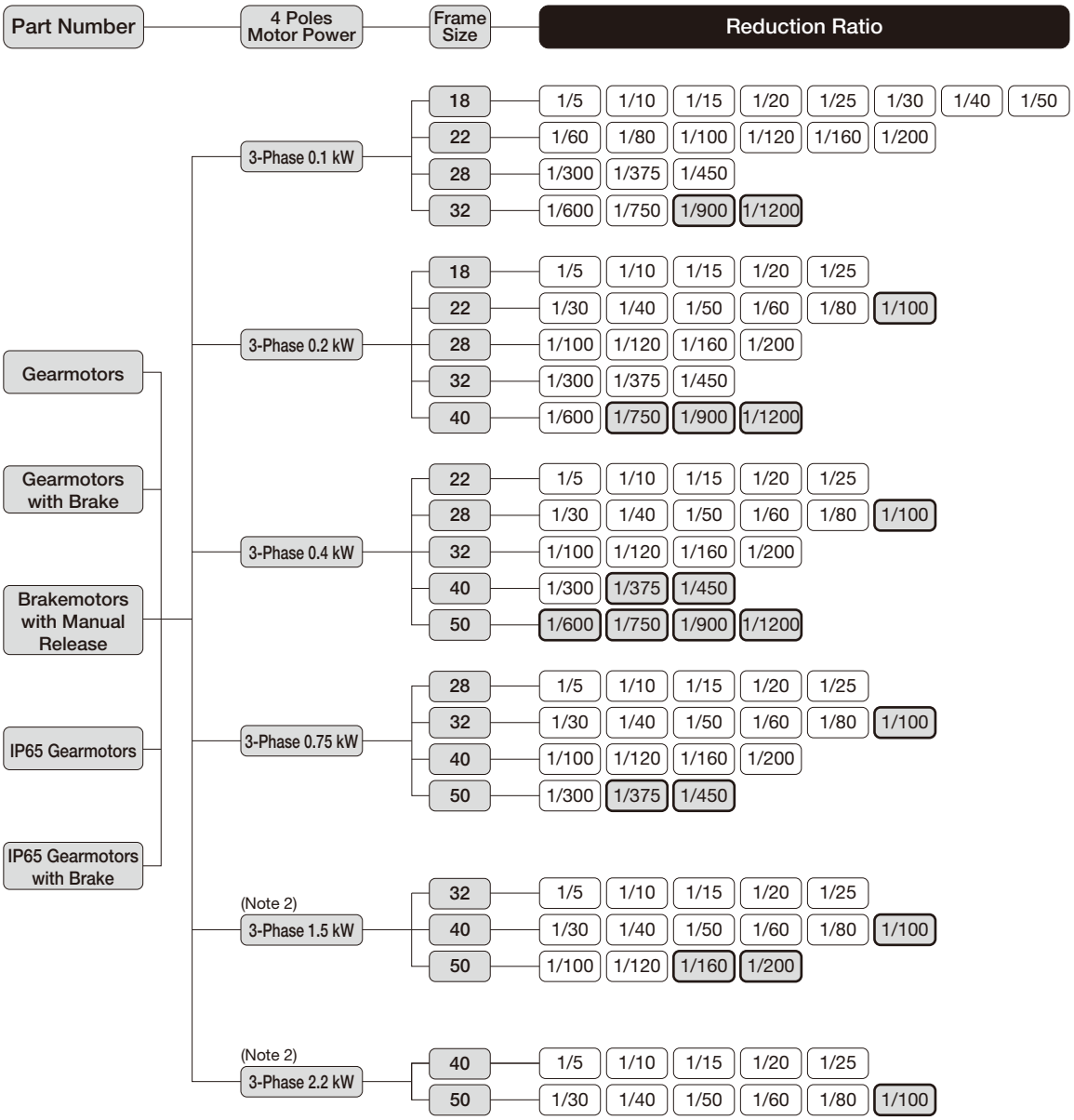

Note 1: The G3 Type is available in three types: Foot mount, Flange mount, and Small flange mount.
Please note that small flange mount (G3K) is available only for frame sizes 18 to 32.
Note 2: IP65 gearmotors with a brake are not available for 1.5 kW and 2.2 kW.
Note 3: ▭ indicates a limited torque type. Please make sure to check the allowable output shaft torque in the performance table.

MID Series <GA Type>

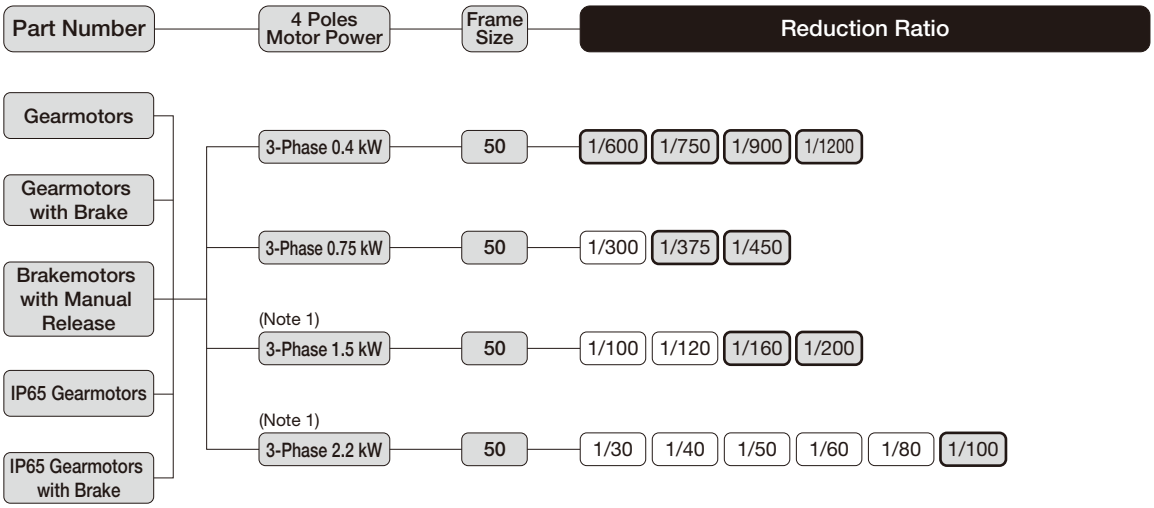

Note 1: IP65 gearmotors with a brake are not available for 1.5 kW and 2.2 kW.
Note 2: ▭ indicates a limited torque type. Please make sure to check the allowable output shaft torque in the performance table.

MID Series <H2 Type>

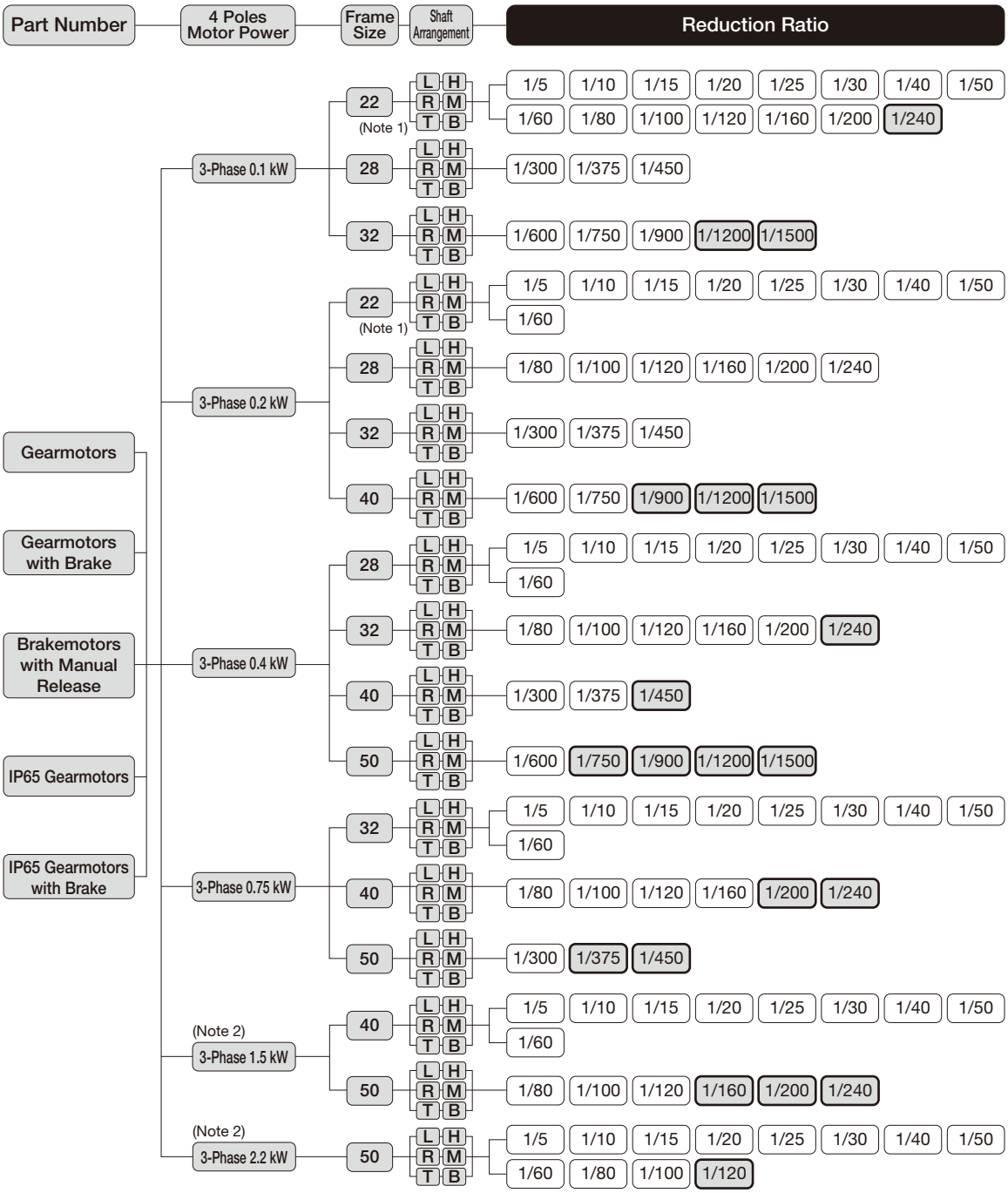

Note 1: The flange mount type (H2F) is also available for frame size 22 only.
Note 2: IP65 gearmotors with a brake are not available for 1.5 kW and 2.2 kW.
Note 3: Shaft arrangement H, M, and B (stainless steel) are IP65 gearmotors and IP65 gearmotors with a brake.
Note 4: ▭ indicates a limited torque type. Please make sure to check the allowable output shaft torque in the performance table.

MID Series <Right Angle Hollow Bore/FS Type>

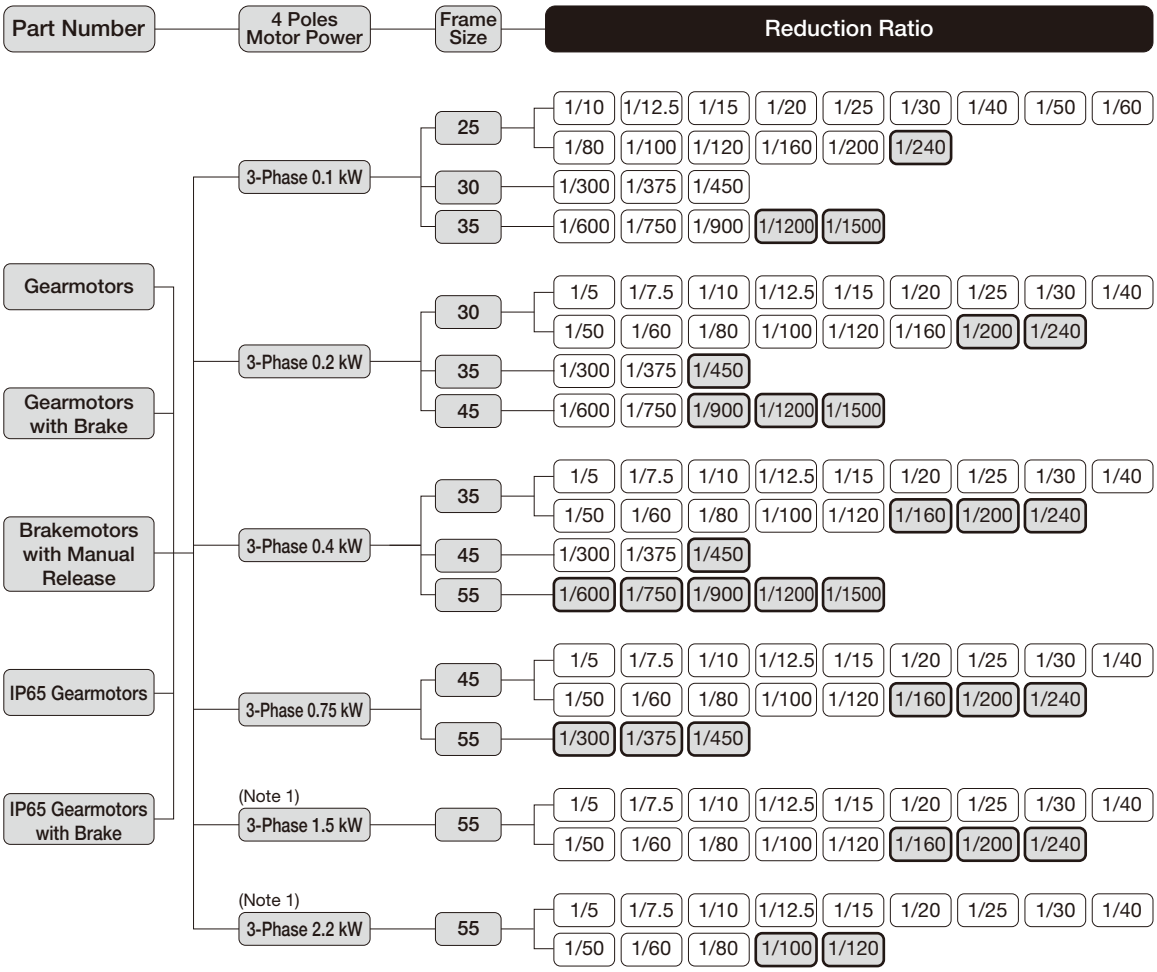

Note 1: IP65 gearmotors with a brake are not available for 1.5 kW and 2.2 kW.
Note 2: ▭ indicates a limited torque type. Please make sure to check the allowable output shaft torque in the performance table.

MID Series <Right Angle Hollow Bore/FAS Type>

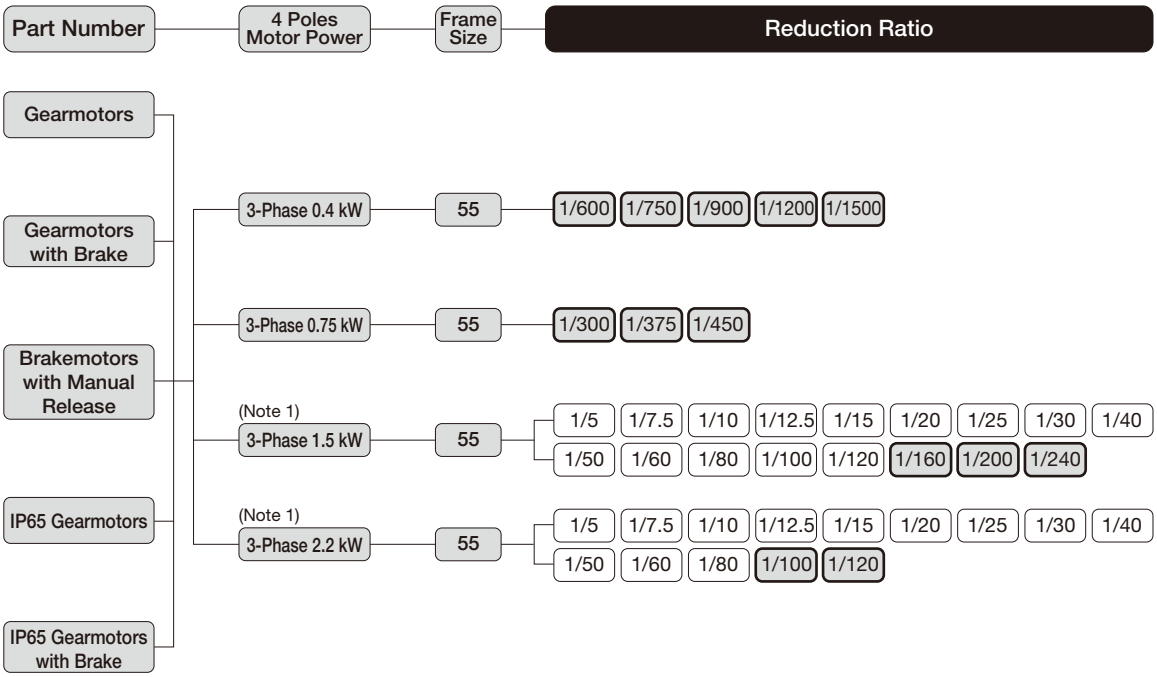

Note 1: IP65 gearmotors with a brake are not available for 1.5 kW and 2.2 kW.
Note 2: ▭ indicates a limited torque type. Please make sure to check the allowable output shaft torque in the performance table.

MID Series <Right Angle Shaft/FF Type>

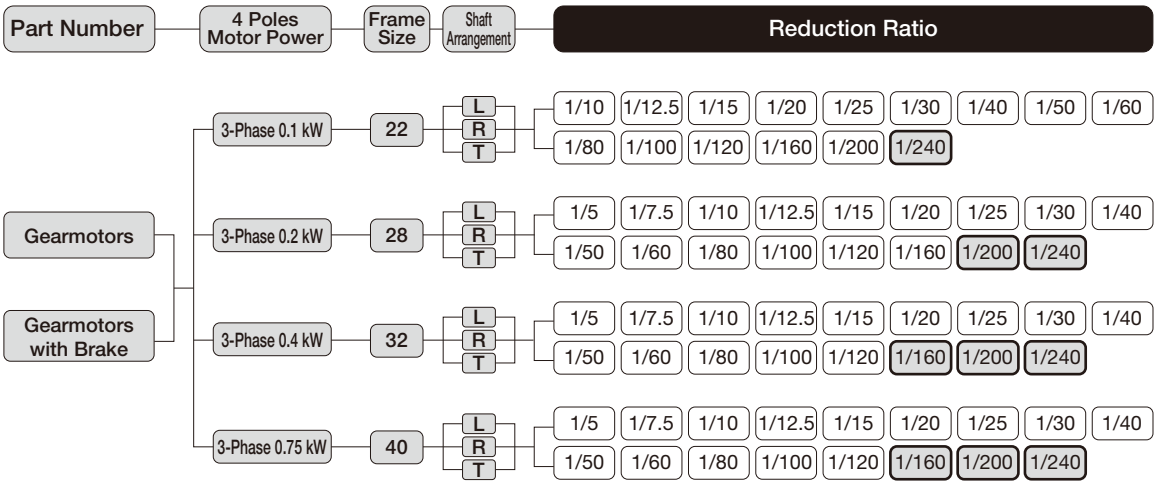

Note 1: Please note that water-resistant specification of right angle shafts is not available.
Note 2: ▭ indicates a limited torque type. Please make sure to check the allowable output shaft torque in the performance table.

MID Series <Concentric Right Angle Hollow Bore/F3S Type>

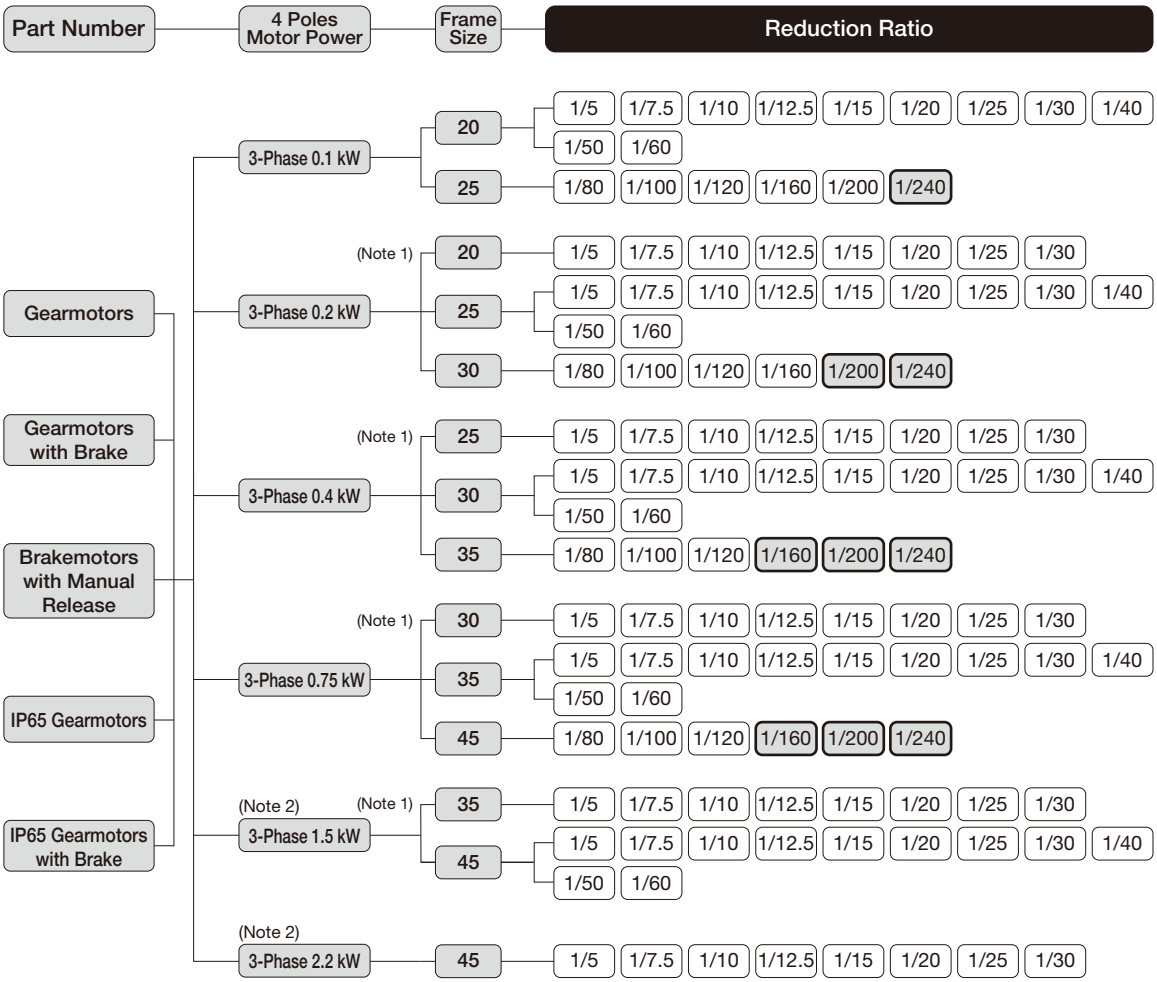

Note 1: Small frame size type
Note 2: IP65 gearmotors with a brake are not available for 1.5 kW and 2.2 kW.
Note 3: ▭ indicates a limited torque type. Please make sure to check the allowable output shaft torque in the performance table.

MID Series <Concentric Right Angle Shaft/F3F Type>

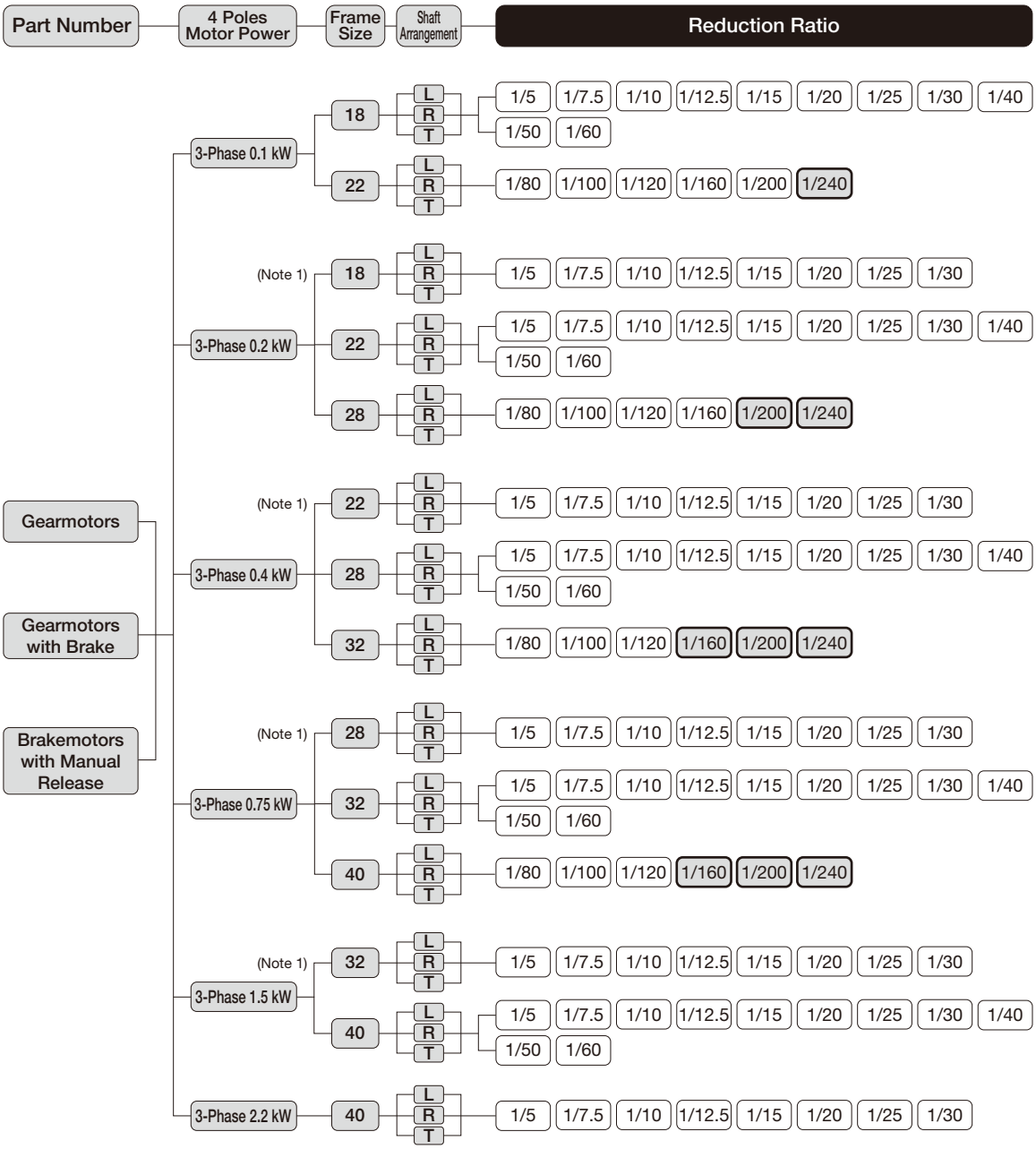

Note 1: Small frame size type
Note 2: Please note that water-resistant specification of concentric right angle shaft is not available.
Note 3: ▭ indicates a limited torque type. Please make sure to check the allowable output shaft torque in the performance table.

Global Standard Gearmotors Model, Motor Characteristics Table

MINI Series <G Type>

■ 3-Phase Standard Voltage

Power (W)	Voltage (V)	Frequency (Hz)	Frame Size	Rated Current (A)	Rated Speed (r/min)	Startup Current (A)
15	200/200/220	50/60/60	12	0.13/0.13/0.13	1350/1550/1610	0.30/0.29/0.27
			22	0.13/0.13/0.13	1350/1550/1610	0.30/0.29/0.27
25	200/200/220	50/60/60	12	0.18/0.18/0.19	1320/1520/1590	0.44/0.42/0.46
			15	0.17/0.17/0.17	1310/1520/1580	0.42/0.40/0.42
			22	0.18/0.18/0.19	1320/1520/1590	0.44/0.42/0.46
			28	0.17/0.17/0.17	1310/1520/1580	0.42/0.40/0.42
40	200/200/220	50/60/60	15	0.28/0.26/0.27	1320/1540/1590	0.64/0.61/0.75
			18	0.20/0.21/0.21	1370/1590/1640	0.68/0.64/0.71
			28	0.28/0.26/0.27	1320/1540/1590	0.64/0.61/0.75
			32	0.28/0.26/0.27	1320/1540/1590	0.64/0.61/0.75
60	200/200/220	50/60/60	15	0.36/0.35/0.36	1300/1520/1570	1.04/0.97/1.07
			18	0.30/0.32/0.31	1370/1620/1650	1.10/1.03/1.14
			28	0.36/0.35/0.36	1300/1520/1570	1.04/0.97/1.07
			32	0.36/0.35/0.36	1300/1520/1570	1.04/0.97/1.07
90	200/200/220	50/60/60	15	0.49/0.50/0.50	1300/1500/1550	1.25/1.33/1.38
			18	0.44/0.46/0.44	1360/1580/1630	1.59/1.50/1.66
			28	0.49/0.50/0.50	1300/1500/1550	1.25/1.33/1.38
			32	0.49/0.50/0.50	1300/1500/1550	1.25/1.33/1.38
			40	0.44/0.46/0.44	1360/1580/1630	1.59/1.50/1.66

■ 3-Phase High Voltage (400 V Class)

Power (W)	Voltage (V)	Frequency (Hz)	Frame Size	Rated Current (A)	Rated Speed (r/min)	Startup Current (A)
15	380/400/400/440	50/50/60/60	12	0.11/0.12/0.10/0.11	1400/1400/1700/1700	0.27/0.29/0.27/0.30
			22	0.11/0.12/0.10/0.11	1400/1400/1700/1700	0.27/0.29/0.27/0.30
25	380/400/400/440	50/50/60/60	12	0.11/0.12/0.11/0.12	1350/1400/1600/1650	0.27/0.28/0.26/0.29
			15	0.09/0.09/0.09/0.09	1300/1350/1550/1600	0.20/0.21/0.20/0.22
			22	0.11/0.12/0.11/0.12	1350/1400/1600/1650	0.27/0.28/0.26/0.29
			28	0.09/0.09/0.09/0.09	1300/1350/1550/1600	0.20/0.21/0.20/0.22
40	380/400/400/440	50/50/60/60	15	0.13/0.14/0.13/0.14	1300/1350/1550/1600	0.33/0.35/0.33/0.37
			18	0.10/0.10/0.10/0.10	1350/1400/1600/1650	0.32/0.34/0.32/0.35
			28	0.13/0.14/0.13/0.14	1300/1350/1550/1600	0.33/0.35/0.33/0.37
			32	0.13/0.14/0.13/0.14	1300/1350/1550/1600	0.33/0.35/0.33/0.37
60	380/400/400/440	50/50/60/60	15	0.17/0.17/0.17/0.17	1300/1350/1550/1600	0.43/0.46/0.43/0.47
			18	0.16/0.16/0.16/0.16	1350/1400/1600/1650	0.48/0.51/0.49/0.54
			28	0.17/0.17/0.17/0.17	1300/1350/1550/1600	0.43/0.46/0.43/0.47
			32	0.17/0.17/0.17/0.17	1300/1350/1550/1600	0.43/0.46/0.43/0.47
90	380/400/400/440	50/50/60/60	15	0.26/0.26/0.26/0.26	1300/1350/1550/1600	0.70/0.74/0.69/0.77
			18	0.23/0.23/0.24/0.24	1350/1350/1600/1650	0.73/0.78/0.74/0.81
			28	0.26/0.26/0.26/0.26	1300/1350/1550/1600	0.70/0.74/0.69/0.77
			32	0.26/0.26/0.26/0.26	1300/1350/1550/1600	0.70/0.74/0.69/0.77
			40	0.23/0.23/0.24/0.24	1350/1350/1600/1650	0.73/0.78/0.74/0.81

■ 1-Phase Standard Voltage

Power (W)	Voltage (V)	Frequency (Hz)	Frame Size	Rated Current (A)	Rated Speed (r/min)	Startup Current (A)	Capacitor (μF)
15	100/100	50/60	12	0.35/0.33	1390/1680	0.73/0.66	5
			22	0.35/0.33	1390/1680	0.73/0.66	5
25	100/100	50/60	12	0.45/0.48	1350/1630	0.86/0.79	7
			15	0.45/0.45	1370/1640	1.01/0.93	7
			22	0.45/0.48	1350/1630	0.86/0.79	7
			28	0.45/0.45	1370/1640	1.01/0.93	7
40	100/100	50/60	15	0.61/0.66	1380/1630	1.47/1.34	10
			18	0.62/0.65	1440/1720	2.18/2.00	10
			28	0.61/0.66	1380/1630	1.47/1.34	10
			32	0.61/0.66	1380/1630	1.47/1.34	10
60	100/100	50/60	15	0.90/1.00	1380/1650	2.13/1.95	15
			18	0.85/1.00	1430/1700	2.60/2.41	15
			28	0.90/1.00	1380/1650	2.13/1.95	15
			32	0.90/1.00	1380/1650	2.13/1.95	15
90	100/100	50/60	15	1.30/1.40	1350/1600	2.90/2.70	20
			18	1.20/1.40	1400/1680	3.32/3.10	20
			28	1.30/1.40	1350/1600	2.90/2.70	20
			32	1.30/1.40	1350/1600	2.90/2.70	20
			40	1.20/1.40	1400/1680	3.32/3.10	20

■ 1-Phase High Voltage (200 V Class)

Power (W)	Voltage (V)	Frequency (Hz)	Frame Size	Rated Current (A)	Rated Speed (r/min)	Startup Current (A)	Capacitor (μF)
15	200/200	50/60	12	0.18/0.17	1360/1620	0.35/0.32	1.0
			22	0.18/0.17	1360/1620	0.35/0.32	1.0
25	200/200	50/60	12	0.24/0.23	1340/1600	0.48/0.44	1.5
			15	0.23/0.23	1340/1600	0.49/0.44	1.5
			22	0.24/0.23	1340/1600	0.48/0.44	1.5
			28	0.23/0.23	1340/1600	0.49/0.44	1.5
40	200/200	50/60	15	0.29/0.34	1340/1610	0.64/0.61	2.5
			18	0.31/0.34	1430/1700	1.01/0.92	2.5
			28	0.29/0.34	1340/1610	0.64/0.61	2.5
			32	0.29/0.34	1340/1610	0.64/0.61	2.5
60	200/200	50/60	15	0.42/0.47	1370/1640	1.07/0.98	3.5
			18	0.42/0.48	1420/1690	1.34/1.25	3.5
			28	0.42/0.47	1370/1640	1.07/0.98	3.5
			32	0.42/0.47	1370/1640	1.07/0.98	3.5
90	200/200	50/60	15	0.62/0.67	1340/1600	1.46/1.36	5
			18	0.62/0.69	1400/1680	1.72/1.57	5
			28	0.62/0.67	1340/1600	1.46/1.36	5
			32	0.62/0.67	1340/1600	1.46/1.36	5
			40	0.62/0.69	1400/1680	1.72/1.57	5

MINI Series <H Type>

■ 3-Phase Standard Voltage

Power (W)	Voltage (V)	Frequency (Hz)	Frame Size	Rated Current (A)	Rated Speed (r/min)	Startup Current (A)
15	200/200/220	50/60/60	15	0.13/0.13/0.13	1350/1550/1610	0.30/0.29/0.27
			22	0.13/0.13/0.13	1350/1550/1610	0.30/0.29/0.27
25	200/200/220	50/60/60	15	0.18/0.18/0.19	1320/1520/1590	0.44/0.42/0.46
			22	0.18/0.18/0.19	1320/1520/1590	0.44/0.42/0.46
			28	0.17/0.17/0.17	1310/1520/1580	0.42/0.40/0.42
40	200/200/220	50/60/60	18	0.28/0.26/0.27	1320/1540/1590	0.64/0.61/0.75
			28	0.28/0.26/0.27	1320/1540/1590	0.64/0.61/0.75
			32	0.28/0.26/0.27	1320/1540/1590	0.64/0.61/0.75
60	200/200/220	50/60/60	18	0.36/0.35/0.36	1300/1520/1570	1.04/0.97/1.07
			28	0.36/0.35/0.36	1300/1520/1570	1.04/0.97/1.07
			32	0.36/0.35/0.36	1300/1520/1570	1.04/0.97/1.07
90	200/200/220	50/60/60	18	0.49/0.50/0.50	1300/1500/1550	1.25/1.33/1.38
			28	0.49/0.50/0.50	1300/1500/1550	1.25/1.33/1.38
			32	0.49/0.50/0.50	1300/1500/1550	1.25/1.33/1.38
			40	0.44/0.46/0.44	1360/1580/1630	1.59/1.50/1.66

■ 3-Phase High Voltage (400 V Class)

Power (W)	Voltage (V)	Frequency (Hz)	Frame Size	Rated Current (A)	Rated Speed (r/min)	Startup Current (A)
15	380/400/400/440	50/50/60/60	15	0.11/0.12/0.10/0.11	1400/1400/1700/1700	0.27/0.29/0.27/0.30
			22	0.11/0.12/0.10/0.11	1400/1400/1700/1700	0.27/0.29/0.27/0.30
25	380/400/400/440	50/50/60/60	15	0.11/0.12/0.11/0.12	1350/1400/1600/1650	0.27/0.28/0.26/0.29
			22	0.11/0.12/0.11/0.12	1350/1400/1600/1650	0.27/0.28/0.26/0.29
			28	0.09/0.09/0.09/0.09	1300/1350/1550/1600	0.20/0.21/0.20/0.22
40	380/400/400/440	50/50/60/60	18	0.13/0.14/0.13/0.14	1300/1350/1550/1600	0.33/0.35/0.33/0.37
			28	0.13/0.14/0.13/0.14	1300/1350/1550/1600	0.33/0.35/0.33/0.37
			32	0.13/0.14/0.13/0.14	1300/1350/1550/1600	0.33/0.35/0.33/0.37
60	380/400/400/440	50/50/60/60	18	0.17/0.17/0.17/0.17	1300/1350/1550/1600	0.43/0.46/0.43/0.47
			28	0.17/0.17/0.17/0.17	1300/1350/1550/1600	0.43/0.46/0.43/0.47
			32	0.17/0.17/0.17/0.17	1300/1350/1550/1600	0.43/0.46/0.43/0.47
90	380/400/400/440	50/50/60/60	18	0.26/0.26/0.26/0.26	1300/1350/1550/1600	0.70/0.74/0.69/0.77
			28	0.26/0.26/0.26/0.26	1300/1350/1550/1600	0.70/0.74/0.69/0.77
			32	0.26/0.26/0.26/0.26	1300/1350/1550/1600	0.70/0.74/0.69/0.77
			40	0.23/0.23/0.24/0.24	1350/1350/1600/1650	0.73/0.78/0.74/0.81

■ 1-Phase Standard Voltage

Power (W)	Voltage (V)	Frequency (Hz)	Frame Size	Rated Current (A)	Rated Speed (r/min)	Startup Current (A)	Capacitor (μF)
15	100/100	50/60	15	0.35/0.33	1390/1680	0.73/0.66	5
			22	0.35/0.33	1390/1680	0.73/0.66	5
25	100/100	50/60	15	0.45/0.48	1350/1630	0.86/0.79	7
			22	0.45/0.48	1350/1630	0.86/0.79	7
			28	0.45/0.45	1370/1640	1.01/0.93	7
40	100/100	50/60	18	0.61/0.66	1380/1630	1.47/1.34	10
			28	0.61/0.66	1380/1630	1.47/1.34	10
			32	0.61/0.66	1380/1630	1.47/1.34	10
60	100/100	50/60	18	0.90/1.00	1380/1650	2.13/1.95	15
			28	0.90/1.00	1380/1650	2.13/1.95	15
			32	0.90/1.00	1380/1650	2.13/1.95	15
90	100/100	50/60	18	1.30/1.40	1350/1600	2.90/2.70	20
			28	1.30/1.40	1350/1600	2.90/2.70	20
			32	1.30/1.40	1350/1600	2.90/2.70	20
			40	1.20/1.40	1400/1680	3.32/3.10	20

■ 1-Phase High Voltage (200 V Class)

Power (W)	Voltage (V)	Frequency (Hz)	Frame Size	Rated Current (A)	Rated Speed (r/min)	Startup Current (A)	Capacitor (μF)
15	200/200	50/60	15	0.18/0.17	1360/1620	0.35/0.32	1.0
			22	0.18/0.17	1360/1620	0.35/0.32	1.0
25	200/200	50/60	15	0.24/0.23	1340/1600	0.48/0.44	1.5
			22	0.24/0.23	1340/1600	0.48/0.44	1.5
			28	0.23/0.23	1340/1600	0.49/0.44	1.5
40	200/200	50/60	18	0.29/0.34	1340/1610	0.64/0.61	2.5
			28	0.29/0.34	1340/1610	0.64/0.61	2.5
			32	0.29/0.34	1340/1610	0.64/0.61	2.5
60	200/200	50/60	18	0.42/0.47	1370/1640	1.07/0.98	3.5
			28	0.42/0.47	1370/1640	1.07/0.98	3.5
			32	0.42/0.47	1370/1640	1.07/0.98	3.5
90	200/200	50/60	18	0.62/0.67	1340/1600	1.46/1.36	5
			28	0.62/0.67	1340/1600	1.46/1.36	5
			32	0.62/0.67	1340/1600	1.46/1.36	5
			40	0.62/0.69	1400/1680	1.72/1.57	5

MINI Series <Concentric Right Angle Hollow Bore/F2S Type>

■ 3-Phase Standard Voltage

Power (W)	Voltage (V)	Frequency (Hz)	Frame Size	Rated Current (A)	Rated Speed (r/min)	Startup Current (A)
15	200/200/220	50/60/60	12	0.13/0.13/0.13	1350/1550/1610	0.30/0.29/0.27
25	200/200/220	50/60/60	12	0.18/0.18/0.19	1320/1520/1590	0.44/0.42/0.46
40	200/200/220	50/60/60	15	0.28/0.26/0.27	1320/1540/1590	0.64/0.61/0.75
60	200/200/220	50/60/60	15	0.36/0.35/0.36	1300/1520/1570	1.04/0.97/1.07
90	200/200/220	50/60/60	15	0.49/0.50/0.50	1300/1500/1550	1.25/1.33/1.38

■ 3-Phase High Voltage (400 V Class)

Power (W)	Voltage (V)	Frequency (Hz)	Frame Size	Rated Current (A)	Rated Speed (r/min)	Startup Current (A)
15	380/400/400/440	50/50/60/60	12	0.11/0.12/0.10/0.11	1400/1400/1700/1700	0.27/0.29/0.27/0.30
25	380/400/400/440	50/50/60/60	12	0.11/0.12/0.11/0.12	1350/1400/1600/1650	0.27/0.28/0.26/0.29
40	380/400/400/440	50/50/60/60	15	0.13/0.14/0.13/0.14	1300/1350/1550/1600	0.33/0.35/0.33/0.37
60	380/400/400/440	50/50/60/60	15	0.17/0.17/0.17/0.17	1300/1350/1550/1600	0.43/0.46/0.43/0.47
90	380/400/400/440	50/50/60/60	15	0.26/0.26/0.26/0.26	1300/1350/1550/1600	0.70/0.74/0.69/0.77

■ 1-Phase Standard Voltage

Power (W)	Voltage (V)	Frequency (Hz)	Frame Size	Rated Current (A)	Rated Speed (r/min)	Startup Current (A)	Capacitor (μF)
15	100/100	50/60	12	0.35/0.33	1390/1680	0.73/0.66	5
25	100/100	50/60	12	0.45/0.48	1350/1630	0.86/0.79	7
40	100/100	50/60	15	0.61/0.66	1380/1630	1.47/1.34	10
60	100/100	50/60	15	0.90/1.00	1380/1650	2.13/1.95	15
90	100/100	50/60	15	1.30/1.40	1350/1600	2.90/2.70	20

■ 1-Phase High Voltage (200 V Class)

Power (W)	Voltage (V)	Frequency (Hz)	Frame Size	Rated Current (A)	Rated Speed (r/min)	Startup Current (A)	Capacitor (μF)
15	200/200	50/60	12	0.18/0.17	1360/1620	0.35/0.32	1.0
25	200/200	50/60	12	0.24/0.23	1340/1600	0.48/0.44	1.5
40	200/200	50/60	15	0.29/0.34	1340/1610	0.64/0.61	2.5
60	200/200	50/60	15	0.42/0.47	1370/1640	1.07/0.98	3.5
90	200/200	50/60	15	0.62/0.67	1340/1600	1.46/1.36	5

MINI Series <Concentric Right Angle Shaft/F2F Type>

■ 3-Phase Standard Voltage

Power (W)	Voltage (V)	Frequency (Hz)	Frame Size	Rated Current (A)	Rated Speed (r/min)	Startup Current (A)
15	200/200/220	50/60/60	15	0.13/0.13/0.13	1350/1550/1610	0.30/0.29/0.27
25	200/200/220	50/60/60	15	0.18/0.18/0.19	1320/1520/1590	0.44/0.42/0.46
40	200/200/220	50/60/60	18	0.28/0.26/0.27	1320/1540/1590	0.64/0.61/0.75
60	200/200/220	50/60/60	18	0.36/0.35/0.36	1300/1520/1570	1.04/0.97/1.07
90	200/200/220	50/60/60	18	0.49/0.50/0.50	1300/1500/1550	1.25/1.33/1.38

■ 3-Phase High Voltage (400 V Class)

Power (W)	Voltage (V)	Frequency (Hz)	Frame Size	Rated Current (A)	Rated Speed (r/min)	Startup Current (A)
15	380/400/400/440	50/50/60/60	15	0.11/0.12/0.10/0.11	1400/1400/1700/1700	0.27/0.29/0.27/0.30
25	380/400/400/440	50/50/60/60	15	0.11/0.12/0.11/0.12	1350/1400/1600/1650	0.27/0.28/0.26/0.29
40	380/400/400/440	50/50/60/60	18	0.13/0.14/0.13/0.14	1300/1350/1550/1600	0.33/0.35/0.33/0.37
60	380/400/400/440	50/50/60/60	18	0.17/0.17/0.17/0.17	1300/1350/1550/1600	0.43/0.46/0.43/0.47
90	380/400/400/440	50/50/60/60	18	0.26/0.26/0.26/0.26	1300/1350/1550/1600	0.70/0.74/0.69/0.77

■ 1-Phase Standard Voltage

Power (W)	Voltage (V)	Frequency (Hz)	Frame Size	Rated Current (A)	Rated Speed (r/min)	Startup Current (A)	Capacitor (μF)
15	100/100	50/60	15	0.35/0.33	1390/1680	0.73/0.66	5
25	100/100	50/60	15	0.45/0.48	1350/1630	0.86/0.79	7
40	100/100	50/60	18	0.61/0.66	1380/1630	1.47/1.34	10
60	100/100	50/60	18	0.90/1.00	1380/1650	2.13/1.95	15
90	100/100	50/60	18	1.30/1.40	1350/1600	2.90/2.70	20

■ 1-Phase High Voltage (200 V Class)

Power (W)	Voltage (V)	Frequency (Hz)	Frame Size	Rated Current (A)	Rated Speed (r/min)	Startup Current (A)	Capacitor (μF)
15	200/200	50/60	15	0.18/0.17	1360/1620	0.35/0.32	1.0
25	200/200	50/60	15	0.24/0.23	1340/1600	0.48/0.44	1.5
40	200/200	50/60	18	0.29/0.34	1340/1610	0.64/0.61	2.5
60	200/200	50/60	18	0.42/0.47	1370/1640	1.07/0.98	3.5
90	200/200	50/60	18	0.62/0.67	1340/1600	1.46/1.36	5

MID Series

■ 3-Phase Standard Voltage 3 Rating [Model (Supply Voltage): N]

Typical Motor Characteristics

Motor Power	Voltage	Frequency	Rated Speed	Current Characteristics		Torque Characteristics		Efficiency
				Rated Current	Startup Current	Startup Torque	Breakdown Torque	
	V	Hz	r/min	A	A	%	%	%
0.1 kW	200	50	1410	0.61	2.39	215	258	–
	200	60	1690	0.54	2.27	190	238	–
	220	60	1710	0.54	2.52	245	300	–
0.2 kW IE2	200	50	1400	1.1	4.70	215	248	65.9
	200	60	1680	1.0	4.35	195	225	68.0
	220	60	1700	1.0	4.85	238	279	68.0
0.4 kW IE2	200	50	1400	2.1	9.50	220	265	73.5
	200	60	1680	1.8	8.60	190	234	72.0
	220	60	1700	1.8	9.60	236	289	72.0
0.75 kW IE3	200	50	1450	3.5	21.8	266	349	82.5
	200	60	1740	3.2	19.0	220	304	85.5
	220	60	1750	3.1	21.1	276	374	85.5
1.5 kW IE3	200	50	1450	6.7	45.6	232	343	85.3
	200	60	1740	6.1	40.3	193	301	86.5
	220	60	1760	5.9	45.1	239	373	86.5
2.2 kW IE3	200	50	1470	9.3	70.3	241	347	86.7
	200	60	1760	8.6	56.9	190	285	89.5
	220	60	1770	8.2	63.7	237	351	89.5

■ 3-Phase High Voltage (400 V Class) 4 Rating [Model (Supply Voltage): W]

Typical Motor Characteristics

Motor Power	Voltage	Frequency	Rated Speed	Current Characteristics		Torque Characteristics		Efficiency
				Rated Current	Startup Current	Startup Torque	Breakdown Torque	
	V	Hz	r/min	A	A	%	%	%
0.1 kW	380	50	1400	0.31	1.12	180	224	–
	400	50	1410	0.31	1.18	199	250	–
	400	60	1690	0.28	1.12	180	233	–
	440	60	1720	0.28	1.22	217	285	–
0.2 kW IE2	380	50	1390	0.56	2.29	192	230	65.9
	400	50	1400	0.56	2.38	220	257	65.9
	400	60	1680	0.5	2.29	214	239	68.0
	440	60	1710	0.5	2.48	258	294	68.0
0.4 kW IE2	380	50	1390	1.0	4.35	194	225	73.5
	400	50	1400	1.0	4.65	216	258	73.5
	400	60	1680	0.9	4.30	184	232	72.0
	440	60	1710	0.9	4.75	221	286	72.0
0.75 kW IE3	380	50	1440	1.73	10.2	252	311	82.5
	400	50	1450	1.72	10.8	269	348	82.5
	400	60	1740	1.58	9.8	224	309	85.5
	440	60	1750	1.54	10.7	282	377	85.5
1.5 kW IE3	380	50	1450	3.4	21.9	211	309	85.3
	400	50	1450	3.4	23.2	237	346	85.3
	400	60	1750	3.1	20.4	197	300	86.5
	440	60	1760	3.0	22.8	244	369	86.5
2.2 kW IE3	380	50	1440	4.5	30.0	209	306	86.7
	400	50	1450	4.4	32.0	234	341	86.7
	400	60	1740	4.2	25.0	180	270	89.5
	440	60	1750	3.9	28.0	210	331	89.5

■ 3-Phase Special Voltage (Dual Voltage) for South Korea/Taiwan [Model (Supply Voltage): K]

Typical Motor Characteristics

Motor Power	Voltage	Frequency	Rated Speed	Current Characteristics		Torque Characteristics		Efficiency
				Rated Current	Startup Current	Startup Torque	Breakdown Torque	
	V	Hz	r/min	A	A	%	%	%
0.1 kW	220	60	1680	0.52	1.90	171	214	–
	380	60	1680	0.30	1.10	167	213	–
0.2 kW IE2	220	60	1680	0.93	3.70	196	232	68.0
	380	60	1680	0.52	2.20	196	229	68.0
0.4 kW IE2	220	60	1670	1.7	7.10	199	209	72.0
	380	60	1670	1.0	4.09	197	208	72.0
0.75 kW IE3	220	60	1740	2.9	16.9	210	291	85.5
	380	60	1740	1.7	9.8	216	294	85.5
1.5 kW IE3	220	60	1760	5.9	45.1	239	373	86.5
	380	60	1760	3.4	25.8	255	366	86.5
2.2 kW IE3	220	60	1770	8.3	65.0	205	375	89.5
	380	60	1770	4.8	38.0	230	360	89.5

■ 3-Phase Special Voltage (Dual Voltage) for China [Model (Supply Voltage): C]

Typical Motor Characteristics

Motor Power	Voltage	Frequency	Rated Speed	Current Characteristics		Torque Characteristics		Efficiency
				Rated Current	Startup Current	Startup Torque	Breakdown Torque	
	V	Hz	r/min	A	A	%	%	%
0.1 kW	220	50	1400	0.55	1.94	180	224	–
	230	50	1410	0.54	2.03	197	245	–
	380	50	1400	0.31	1.12	180	224	–
0.2 kW IE2	220	50	1400	0.99	3.97	192	230	65.9
	230	50	1410	0.98	4.15	210	251	65.9
	380	50	1390	0.56	2.29	192	230	65.9
0.4 kW IE2	220	50	1390	1.8	7.63	194	225	73.5
	230	50	1400	1.8	7.88	212	246	73.5
	380	50	1390	1.0	4.43	194	225	73.5
0.75 kW IE3	220	50	1450	3.0	17.8	233	315	82.5
	230	50	1450	3.0	18.7	263	346	82.5
	380	50	1440	1.7	10.3	242	315	82.5
1.5 kW IE3	220	50	1450	5.9	38.5	214	312	85.3
	230	50	1450	5.9	40.4	240	348	85.3
	380	50	1450	3.4	22.1	219	314	85.3
2.2 kW IE3	220	50	1460	7.9	52.0	209	306	86.7
	230	50	1470	7.7	54.3	228	334	86.7
	380	50	1440	4.5	30.0	209	306	86.7

■ 3-Phase Special Voltage (Dual Voltage) for China/Korea/Taiwan [Model (Supply Voltage): D]

Typical Motor Characteristics

Motor Power	Voltage	Frequency	Rated Speed	Current Characteristics		Torque Characteristics		Efficiency
				Rated Current	Startup Current	Startup Torque	Breakdown Torque	
	V	Hz	r/min	A	A	%	%	%
0.1kW	220	50	1400	0.55	1.94	180	224	–
	220	60	1680	0.52	1.90	171	214	–
	380	50	1400	0.31	1.12	180	224	–
	380	60	1680	0.30	1.10	167	213	–
0.2kW IE2	220	50	1400	0.99	3.97	192	230	65.9
	220	60	1680	0.93	3.70	196	232	68.0
	380	50	1390	0.56	2.29	192	230	65.9
	380	60	1680	0.52	2.20	196	229	68.0
0.4kW IE2	220	50	1390	1.8	7.63	224	261	73.5
	220	60	1670	1.7	7.10	187	237	72.0
	380	50	1390	1.0	4.43	230	264	73.5
	380	60	1670	1.0	4.09	191	236	72.0
0.75kW IE3	220	50	1450	3.1	19.3	255	340	82.5
	220	60	1740	2.9	16.9	210	291	85.5
	380	50	1450	1.8	11.2	255	341	82.5
	380	60	1740	1.7	9.80	216	294	85.5

■ 3-Phase Special Voltage for Europe/North America [Model (Supply Voltage): E]

Typical Motor Characteristics

Motor Power	Voltage	Frequency	Rated Speed	Current Characteristics		Torque Characteristics		Efficiency
				Rated Current	Startup Current	Startup Torque	Breakdown Torque	
	V	Hz	r/min	A	A	%	%	%
0.1 kW	415	50	1390	0.30	1.06	205	238	–
	440	50	1420	0.29	1.12	230	268	–
	480	60	1720	0.26	1.17	244	304	–
0.2 kW IE2	415	50	1370	0.50	1.75	189	213	65.9
	440	50	1400	0.50	1.86	212	239	65.9
	480	60	1700	0.45	2.00	239	267	68.0
0.4 kW IE2	415	50	1390	0.96	3.96	246	254	73.5
	440	50	1410	0.95	4.20	277	286	73.5
	480	60	1680	0.82	4.20	286	304	72.0
0.75 kW IE3	415	50	1440	1.54	8.6	214	284	82.5
	440	50	1450	1.52	9.3	251	325	82.5
	480	60	1750	1.36	9.0	242	342	85.5
1.5 kW IE3	415	50	1450	3.1	20.8	229	321	85.3
	440	50	1460	3.1	22.2	261	361	85.3
	480	60	1760	2.8	21.2	249	372	86.5
2.2 kW IE3	415	50	1460	4.3	33.1	247	353	86.7
	440	50	1470	4.3	35.5	283	401	86.7
	480	60	1770	3.8	29.8	203	310	89.5

■ 3-Phase Special Voltage (Dual Voltage) for North America/Europe [Model (Supply Voltage): U]

Typical Motor Characteristics

Motor Power	Voltage	Frequency	Rated Speed	Current Characteristics		Torque Characteristics		Efficiency
				Rated Current	Startup Current	Startup Torque	Breakdown Torque	
	V	Hz	r/min	A	A	%	%	%
0.75kW IE3	230	60	1760	3.1	22.3	301	412	85.5
	460	60	1760	1.5	11.2	300	414	85.5
	400	50	1450	1.7	10.8	274	347	82.5
1.5kW IE3	230	60	1760	5.9	44.9	242	385	86.5
	460	60	1760	2.9	22.6	245	393	86.5
	400	50	1450	3.3	23.2	273	334	85.3
2.2kW IE3	230	60	1770	7.9	65.2	226	369	89.5
	460	60	1770	4.0	34.8	246	380	89.5
	400	50	1470	4.5	36.3	250	350	86.7

■ 3-Phase Special Voltage (Dual Voltage) for North America/Europe [Model (Supply Voltage): A]

Typical Motor Characteristics

Motor Power	Voltage	Frequency	Rated Speed	Current Characteristics		Torque Characteristics		Efficiency
				Rated Current	Startup Current	Startup Torque	Breakdown Torque	
	V	Hz	r/min	A	A	%	%	%
0.1 kW	208	60	1690	0.54	2.35	200	263	–
	230	60	1730	0.57	2.62	243	329	–
	460	60	1730	0.29	1.26	231	310	–
	400	50	1410	0.31	1.21	230	260	–
0.2 kW IE2	208	60	1680	1.0	4.78	223	275	68.0
	230	60	1720	1.0	5.16	270	330	68.0
	460	60	1720	0.50	2.56	262	328	68.0
	400	50	1400	0.56	2.44	270	300	65.9
0.4 kW IE2	208	60	1680	1.8	8.90	204	257	72.0
	230	60	1720	1.8	9.76	251	311	72.0
	460	60	1720	0.9	4.73	239	297	72.0
	400	50	1400	1.0	4.78	250	290	73.5

■ 3-Phase Special Voltage for Canada [Model (Supply Voltage): M]

Typical Motor Characteristics

Motor Power	Voltage	Frequency	Rated Speed	Current Characteristics		Torque Characteristics		Efficiency
				Rated Current	Startup Current	Startup Torque	Breakdown Torque	
	V	Hz	r/min	A	A	%	%	%
0.1 kW	575	60	1700	0.20	0.87	200	273	–
0.2 kW IE2	575	60	1710	0.40	1.78	229	275	68.0
0.4 kW IE2	575	60	1700	0.68	3.51	249	289	72.0
0.75 kW IE3	575	60	1750	1.16	7.2	200	337	85.5
1.5 kW IE3	575	60	1760	2.2	17.0	250	349	86.5
2.2 kW IE3	575	60	1760	3.3	24.4	258	359	89.5

Gearboxes (Double Shaft Type)

This is an independent GTR gearbox unit (without the motor). You may order this unit in cases of:
- When only a gearbox is required
- When driving a gearbox with a special motor or a non-electric drive method
- When the input speed is different from the motor rated speed

Relationship between the input speed and the allowable output shaft torque

The allowable output shaft torque in the performance table is the value when the input speed is 1500 r/min. If using a gearbox at a different speed, the value calculated by multiplying the input speed by the allowable torque correction coefficient shown in the figure below is the allowable output shaft torque.

■ Allowable Torque Correction Coefficient by the Input Speed of the Gearbox

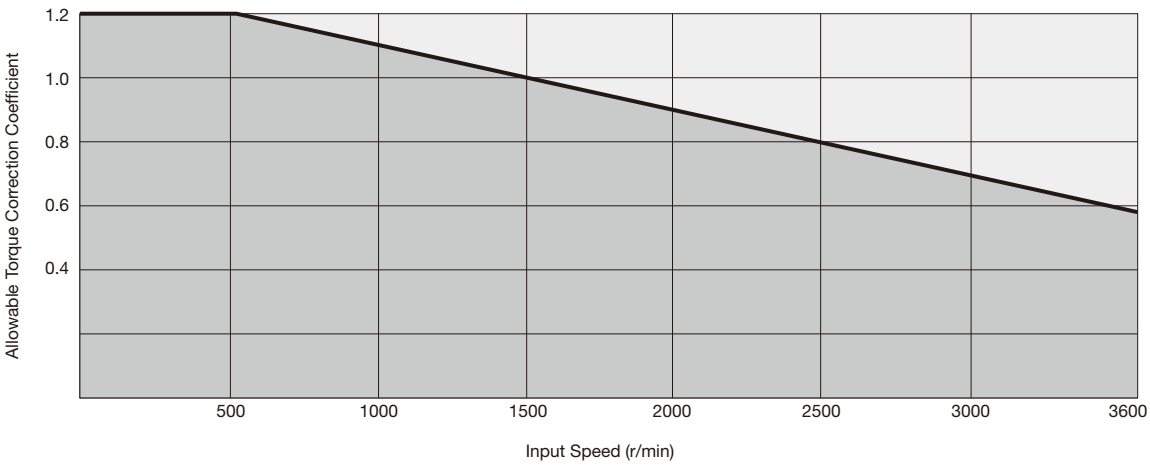

Note 1: Also with regard to the O.H.L., the value calculated by multiplying the input speed by the allowable torque correction coefficient shown in the figure above is the allowable output shaft torque.
Note 2: When using a gearbox at an input speed of 1800 r/min or more, the value calculated by multiplying the allowable moment of inertia J shown in [Table-2] on page 525 by $(1800/\text{input r/min})^2$ is the allowable moment of inertia J.

■ Example

When using the model H2L-32L-40-075 at an input speed of 2500 r/min, the allowable output shaft torque, allowable input/output shaft O.H.L., and allowable output shaft moment of inertia J of this model are as shown below.
Based on the figure above, the allowable torque correction coefficient at an input speed of 2500 r/min is 0.8, and the corrected values would be as below.

Allowable output shaft torque = 172 × 0.8 = 138 N·m
Allowable Input Shaft O.H.L. = 392 × 0.8 = 314 N
Allowable Output Shaft O.H.L. = 3430 × 0.8 = 2744 N

Moreover,

The output shaft allowable moment of inertia
J is $0.003 \times (1800/2500)^2 \times 40^2 \approx 2.5$ kg·m^2

S-Type Gearboxes

GTR gearmotors are equipped with motors produced in-house. If you desire to mount another motor or a special motor (outdoor motor), please use this S-Type gearbox.
The motor can be mounted if their size of a flange matches to JEM1401-1991 standard.
- We request customer to prepare and mount the motor for the S-Type by their own.
- The color of the motor attached to the S-Type gearbox depends on the color in which the motor manufacturer specifies for the specific motor.
- When using a motor with special motor torque characteristics, such as a servo motor, select a gearbox model with care. A low backlash gearbox for servo motors is also available.

Motor mounting procedure

1. Check if the key is set correctly in the input pinion. (4 poles motor power class: 0.1 kW to 0.2 kW)
2. Align the position of the key with the flat surface area of the motor shaft or with the key groove, and insert the key.
3. Confirm that the motor guide portion is completely inserted, and tighten it with four bolts.

● Detailed Dimensions of Input Pinion Key Groove

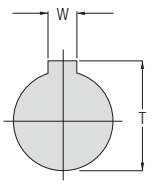

4 Poles Motor Power Class	W		T	
	Reference Dimension	Dimensional Tolerance	Reference Dimension	Dimensional Tolerance
0.1 kW	5	+0.05 +0.01	13	+0.1 0
0.2 kW	5	+0.05 +0.01	13	+0.1 0
0.4 kW	5	+0.05 +0.01	16	+0.2 0
0.75 kW	6	+0.05 +0.01	21.5	+0.2 0
1.5 kW	8	+0.05 +0.01	27	+0.2 0
2.2 kW	8	+0.05 +0.01	31	+0.2 0

Note: Please be sure to read the notes on page 643.

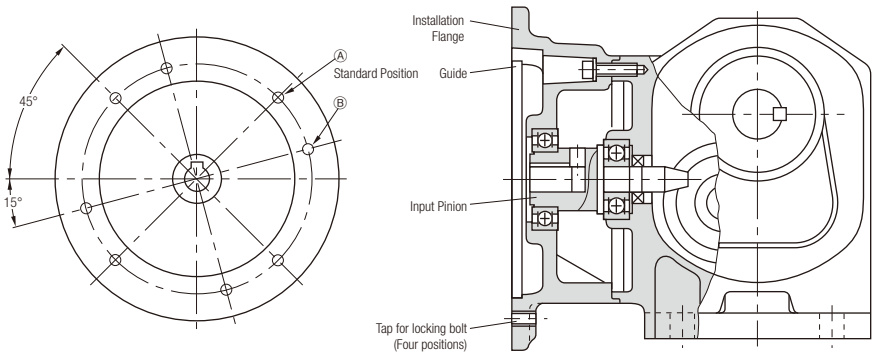

Note: In the case of a gearbox with a 4 poles motor power class of 0.4 kW and frame size 40 or 50, please note that the tightening bolt tap is in position Ⓑ. (Except for the F3 Type)
For precautions about the attachment of a motor to an S-Type gearbox, refer to page 643.

Detailed Dimensions of Double Shaft Type/ S-Type Gearboxes Input Shaft

MID Series

■ G3/GA Type Double Shaft Type

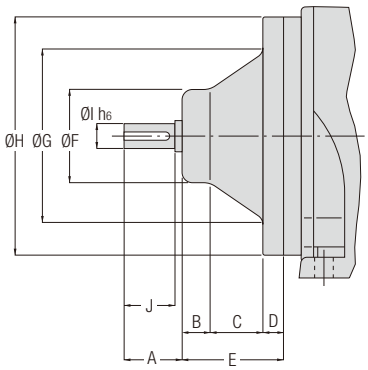

Dimension / Motor Power Class	A	B	C	D	E	F	G	H	I	J	Key
0.1 kW	28	13.5	25.5	10	49	45	80	115	12	25	4 × 4 × 22
0.2 kW	28	13.5	25.5	10	49	45	80	115	12	25	4 × 4 × 22
0.4 kW	32	13.5	27.5	12.5	53.5	52	92	128	15	30	5 × 5 × 27
0.75 kW	37	17	28.5	11	56.5	64	108	142	20	35	6 × 6 × 32
1.5 kW	42	21	42.5	11	74.5	74	129	165	25	40	8 × 7 × 35
2.2 kW	48	26	41.5	13	80.5	90	130	165	30	45	8 × 7 × 40

Note 1: The GA type is available only for an equivalent Motor Power of 0.4 kW to 2.2 kW.

■ G3/GA Type S-Type Gearbox

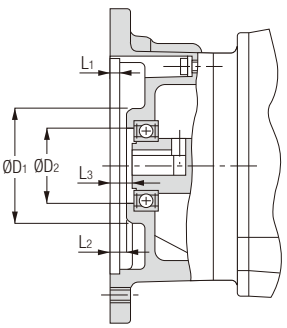

Dimension / Motor Power Class	L_1	L_2	L_3	D_1	D_2
0.1 kW	4.5	5.5	8.5	59	39
0.2 kW	4.5	5.5	8.5	59	39
0.4 kW	4.5	5.5	8.5	59	39
0.75 kW	4.5	5.5	10	67	47
1.5 kW	4.5	6.5	12.5	88	62
2.2 kW	5	7	13	96	70

Note 1: Each dimension represents a reference dimension. In particular, the L_2, D_1, and D_2 areas are black scale, and provide them with a sufficient allowance.
Note 2: The GA type is available only for an equivalent Motor Power of 0.4 kW to 2.2 kW.

Detailed Dimensions of Double Shaft Type/S-Type Gearboxes Input Shaft

■ H2 Type Double Shaft Type

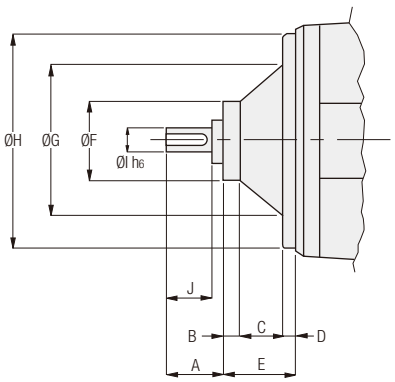

Dimension / Motor Power Class	A	B	C	D	E	F	G	H	I	J	Key
0.2 kW Frame sizes 22 to 28	28	10	22	8	40	43	80	114.5	12	25	4 × 4 × 22
0.2 kW Frame sizes 32 to 40	28	13.5	25.5	10	49	45	80	115	12	25	4 × 4 × 22
0.4 kW	32	10	26.5	10	46.5	48	92	127	15	30	5 × 5 × 27
0.75 kW	37	17	25.5	10	52.5	62	105	142	20	35	6 × 6 × 32
1.5 kW	42	21	42.5	11	74.5	74	129	165	25	40	8 × 7 × 35
2.2 kW	48	26	41.5	13	80.5	90	130	165	30	45	8 × 7 × 40

■ H2 Type S-Type Gearbox

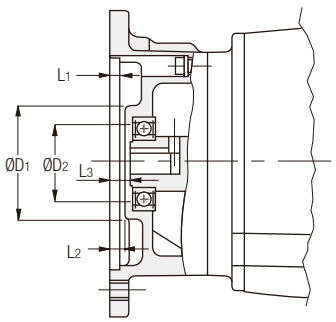

Dimension / Motor Power Class	L_1	L_2	L_3	D_1	D_2
0.1 kW	4.5	5.5	8.5	59	39
0.2 kW	4.5	5.5	8.5	59	39
0.4 kW	4.5	5.5	8.5	59	39
0.75 kW	4.5	5.5	10	67	47
1.5 kW	4.5	6.5	12.5	88	62
2.2 kW	5	7	13	96	70

Note 1: Each dimension represents a reference dimension. In particular, the L_2, D_1, and D_2 areas are black scale, and provide them with a sufficient allowance.

■ F/FA/F3 Type Double Shaft Type

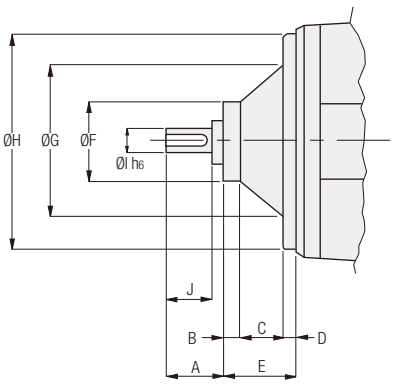

Dimension / Motor Power Class	A	B	C	D	E	F	G	H	I	J	Key
0.1 kW	28	10	22	8	40	43	80	114.5	12	25	4 × 4 × 22
0.2 kW	28	10	22	8	40	43	80	114.5	12	25	4 × 4 × 22
0.4 kW	32	10	26.5	10	46.5	48	92	127	15	30	5 × 5 × 27
0.75 kW	37	17	25.5	10	52.5	62	105	142	20	35	6 × 6 × 32
1.5 kW	42	21	42.5	11	74.5	74	129	165	25	40	8 × 7 × 35
2.2 kW	48	26	41.5	13	80.5	90	130	165	30	45	8 × 7 × 40

Note 1: The FA type is motor power equivalent 0.4 kW to 2.2 kW only.

■ F/FA/F3 Type S-Type Gearbox

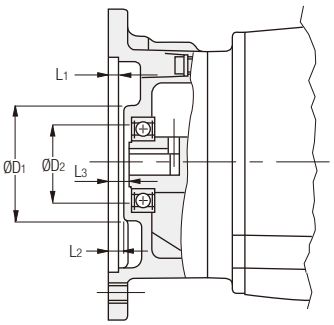

Dimension / Motor Power Class	L_1	L_2	L_3	D_1	D_2
0.1 kW	4.5	5.5	8.5	59	39
0.2 kW	4.5	5.5	8.5	59	39
0.4 kW	4.5	5.5	8.5	59	39
0.75 kW	4.5	5.5	10	67	47
1.5 kW	4.5	6.5	12.5	88	62
2.2 kW	5	7	13	96	70

Note 1: Each dimension represents a reference dimension. In particular, the L_2, D_1, and D_2 areas are black scale, and provide them with a sufficient allowance.
Note 2: The FA type is motor power equivalent 0.4 kW to 2.2 kW only.

Speed Control Gearmotors

Controller

■ Specifications

Type	U Type		P Type					
Product Name	SCU-100	SCU-200	SCP-101L	SCP-201L	SCP-102L	SCP-202L	SCP-103L	SCP-203L
Properties	The controller contains a speed control circuit, a capacitor, a speed setting device, and all other necessary items and can therefore be operated simply by connecting the lead wire with a connector. However, only the variable speed function is available.		The controller is an eight-pin plug-in type and can set the speed of the gearmotor with the speed setting volume on the front side. In addition to the variable speed function, instant stop, slow start/slow down, and parallel operation functions are available and can be selected according to the application.					
Shape	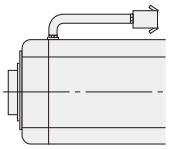		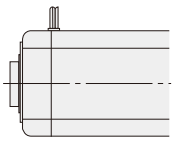					
Motor Power	15 W to 90 W							
1-phase supply voltage (Note 1) (Note 2)	100 V to 115 V (100) 200 V to 230 V (200)		100 V to 120 V (101, 102, 103) 200 V to 240 V (201, 202, 203)					
Variable speed range	50 to 1400 r/min (50 Hz), 50 to 1700 r/min (60 Hz)							
Speed fluctuation rate	±3 %							
Instant stop	×		○		○		○	
Slow start/ Slow down	×		×		○		○	
Parallel operation	×		×		×		○	
Lowering operation	×		×		×		×	
Remote operation distance	5 m		50 m		50 m		200 m	
Outline	Operation box type		Plug-in type (eight-pin)					
Ambient temperature	–10 °C to + 40 °C							

Note 1: The Single-phase supply voltage is the supply voltage of the controller. When using the controller with a voltage other than 100 V or 200 V, select a motor suitable for the voltage as well.

Note 2: The allowable variation range of the supply voltage is ±10 %. If the voltage is low, the rated torque may not be obtained, or rotations my become unstable.

Note 3: Please note that speed control is not available in lowering operation.

Note 4: The remote operation distance of the P Type controller means the length of the conductor connecting the controller and the motor when the power line (pin Nos. ①, ②, and ⑧) and the signal line (pin Nos.③, ④, ⑤, ⑥, and ⑦) are separately connected.

Note 5: The motor shaft speed is set to the maximum level of 1400 r/min (U Type: the volume of the speed controller is set to the HIGH position, P Type: the volume of the external speed setting device is set to the 100 position) by the factory before shipment. To change the speed change range, adjust the knob of the internal speed setting device (trimmer resistor).
In the case of a U Type controller, remove the capacitor on the back side. (Refer to page 632.)

Note 6: Please note that if you purchase only a controller for repairs etc., it may be necessary to set the maximum speed. Be sure to use the controller at a motor shaft speed of 1400 r/min or below (50 Hz) or 1700 r/min or below (60 Hz).

U Type

■ SCU-100/SCU-200

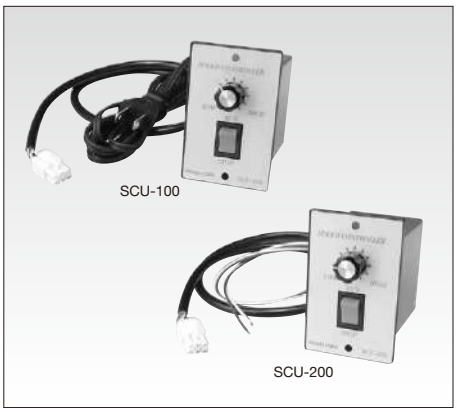

■ Function

- Only variable speed function
- Separate type/*Connect with a lead wire with a connector.
  *AV plug with a cord attached (however, 100 V only)
- For 1-Phase 100 V and 200 V
- Motor power/15 W to 90 W
- The controller contains a speed control circuit, a capacitor, a speed setting device, and all other necessary items. However, please note that if you purchase only a controller for repairs, a capacitor is not included.

*The controller is provided with a 600 mm lead wire with a connector. However, if you want to use it at a farther distance from the speed control gearmotor, use an optional extension cord with a connector. It can be used up to 5 m away from the gearmotor.
Four types of extension cords, 1 m, 2 m, 3 m, and 4 m, are available. (Refer to the options on page 640.)

■ Connection method

1. Connect the motor and the connector of the controller, and connect the AC plug with a cord (200 V: lead wire) to the power supply.
2. Before connecting the power supply, set the RUN/STOP switch to STOP.
3. To switch the rotational direction, connect the orange lead wire of the capacitor to the unused terminal. (Before performing this operation, be sure to turn off the power.)
4. Do not run and stop the controller by turning on and off the switch of the power supply. This may damage the controller in some cases.

● Outline Drawings

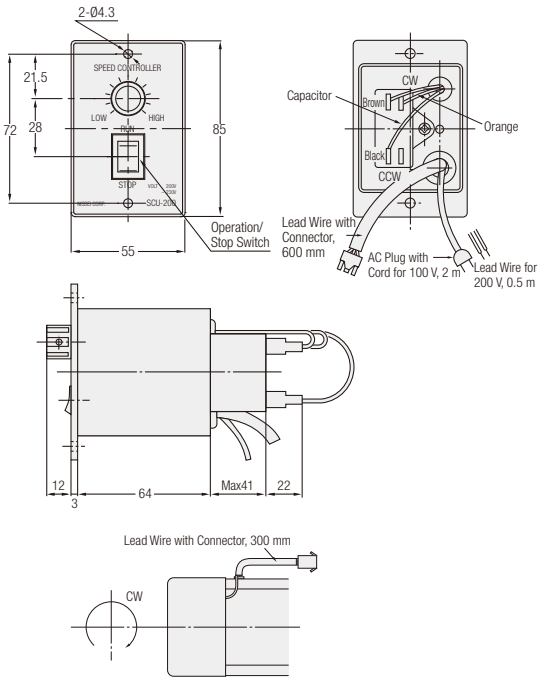

● Panel machining drawing

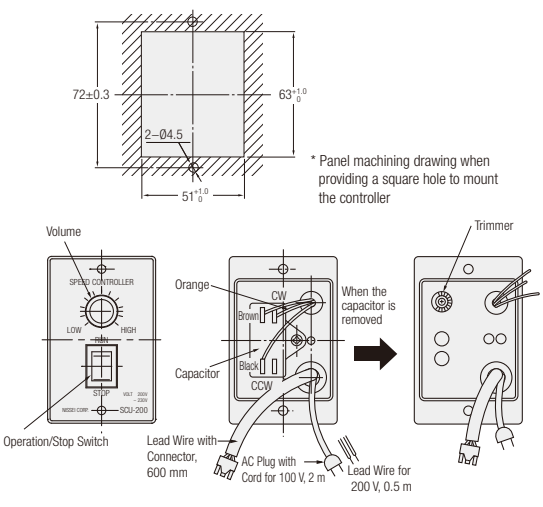

P Type

■ SCP-101L/SCP-201L



* The photo shows SCP-101L.

■ Function

- With variable speed and instant stop functions
- Completely separate type
- The motor speed can be adjusted with the built-in speed setting device or the speed setting volume on the front side of the controller.
- Eight-pin plug-in type
- For Single-phase 100 V and 200 V
- Motor power: 15 W to 90 W
- Instant stops are possible via electronic brake.
- External speed setting device (OP-RV24B20K) attached

● Outline Drawings

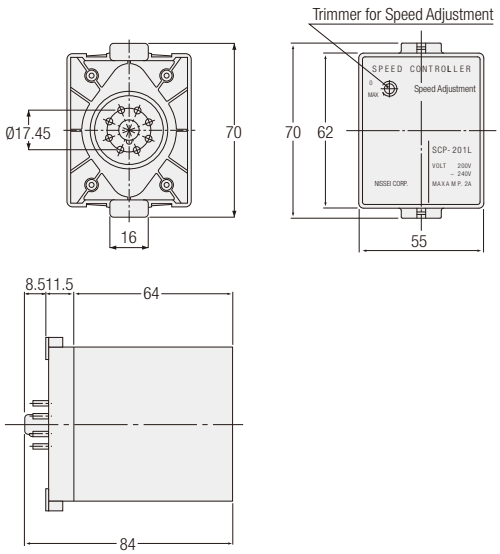

■ SCP-102L/SCP-202L

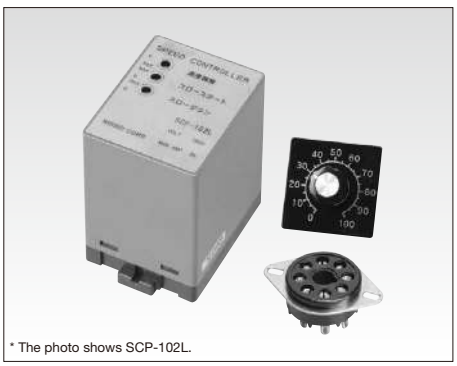

* The photo shows SCP-102L.

■ Function

- With variable speed, instant stop, and slow start/slow down functions
- Completely separate type
- The motor speed can be adjusted with the built-in speed setting device or the speed setting volume on the front side of the controller.
- Eight-pin plug-in type
- For Single-phase 100 V and 200 V
- Motor power: 15 W to 90 W

● Outline Drawings

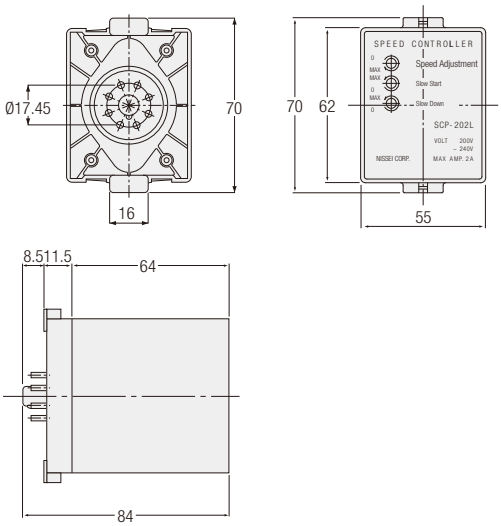

- Instant stops are possible via electronic brake.
- External speed setting device (OP-RV24B20K) attached
- Slow starts and slowdowns are possible. (The speed linearly changes with respect to time. Range of 0.5 to 10 seconds/1000 r/min)

■ SCP-103L/SCP-203L



* The photo shows the SCP-103L.

■ Function

- With variable speed, instant stop, slow start/slow down, and parallel operation functions
- Completely separate type
- The motor speed can be adjusted with the built-in speed setting device or the speed setting volume on the front side of the controller.
- Eight-pin plug-in type
- For Single-phase 100 V and 200 V
- Motor power: 15 W to 90 W

● Outline Drawings

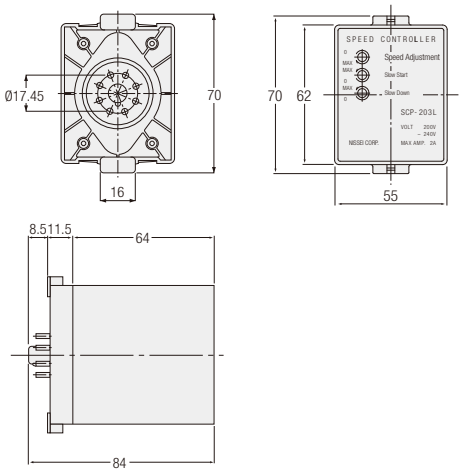

- Instant stops are possible via electronic brake.
- External speed setting device (OP-RV24B20K) attached
- Slow starts and slowdowns are possible. (The speed linearly changes with respect to time. Range of 0.5 to 10 seconds/1000 r/min)
- Parallel operation can be performed.

P Type standard accessories

● External speed setting device



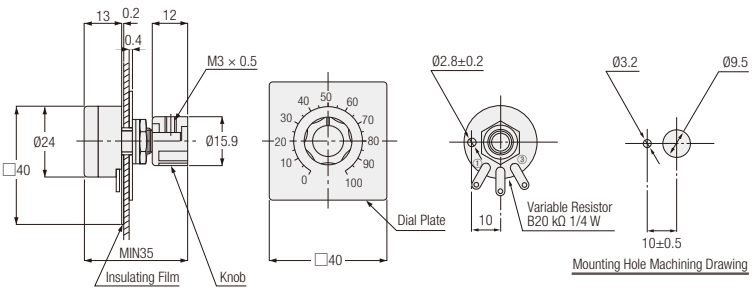

● Back side connection socket

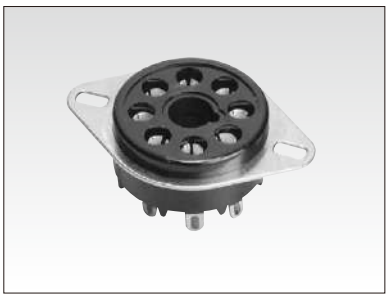

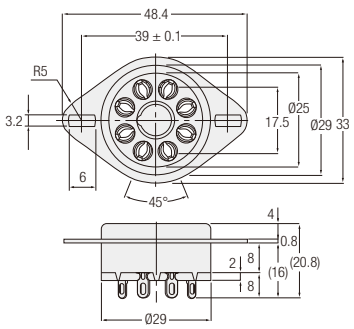

Wiring Diagram

■ Unidirectional operation, speed change, slow start/slow down

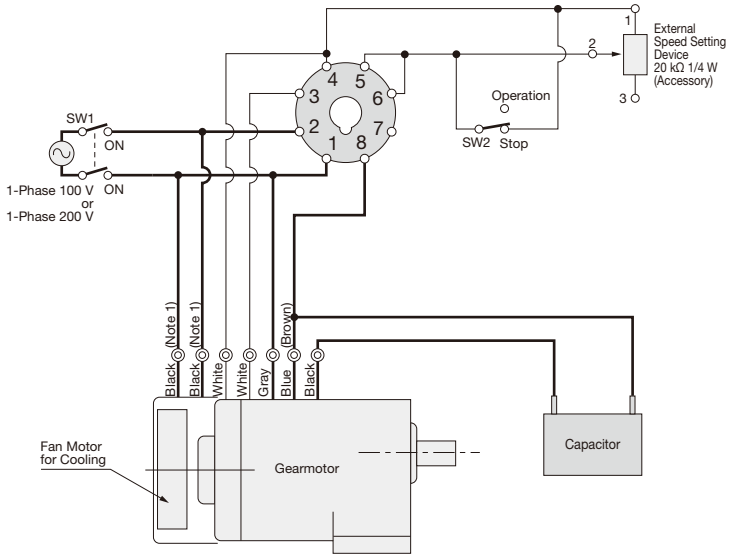

Function	Unidirectional operation, speed change	
	——	Slow Start Slow Down
Motor Power	15 W to 90 W	15 W to 90 W
Applicable model	SCP-101L	SCP-102L SCP-103L
	SCP-201L	SCP-202L SCP-203L

	Power	Remarks
SW1	125 VAC/5 A or more 250 VAC/5 A or more	Power switch
SW2	20 VDC 10 mA	Operation/Stop

Note 1: The fan motor lead wire is attached only to a gearmotor with a motor power of 60 W or 90 W.
Note 2: (Brown) means 200 V.
Note 3: The slow start/slow down function becomes enabled when SW2 is turned on and off.
Note 4: Do not start and stop the controller by operating SW1. This may damage the controller in some cases.

● Rotational Direction

To change the rotational direction, switch between “Blue (Brown)” and “Black.”

- When changing the speed with the controller without using the external speed setting device, remove the external speed setting device in the circuit, and run and stop the gearmotor with SW2.

■ CW/CCW run, speed change, slow start/slow down

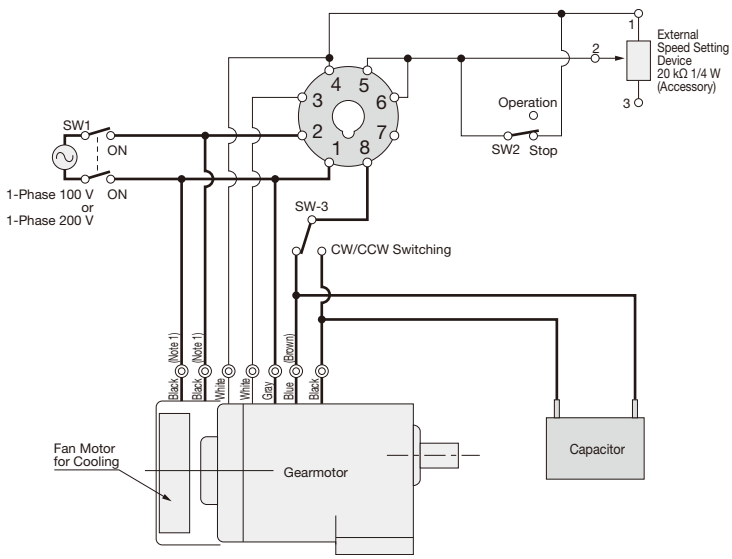

Function	CW/CCW run, speed change	
	——	Slow Start Slow Down
Motor Power	15 W to 90 W	15 W to 90 W
Applicable model	SCP-101L	SCP-102L SCP-103L
	SCP-201L	SCP-202L SCP-203L

	Power	Remarks
SW1	125 VAC/5 A or more 250 VAC/5 A or more	Power switch
SW2	20 VDC 10 mA	Operation/Stop
SW3	125 VAC/5 A or more 250 VAC/5 A or more	CW/CCW Operation

Note 1: The fan motor lead wire is attached only to a gearmotor with a motor power of 60 W or 90 W.
Note 2: (Brown) means 200 V.
Note 3: The slow start/slow down function becomes enabled when SW2 is turned on and off.
Note 4: Do not start and stop the controller by operating SW1. This may damage the controller in some cases.

● Rotational Direction

Before switching the rotational direction (SW3), be sure to stop the motor.

- When changing the speed with the controller without using the external speed setting device, remove the external speed setting device in the circuit, and run and stop the gearmotor with SW2.

■ Unidirectional operation, speed change, instant stop, slow start/slow down (15 W to 25 W)

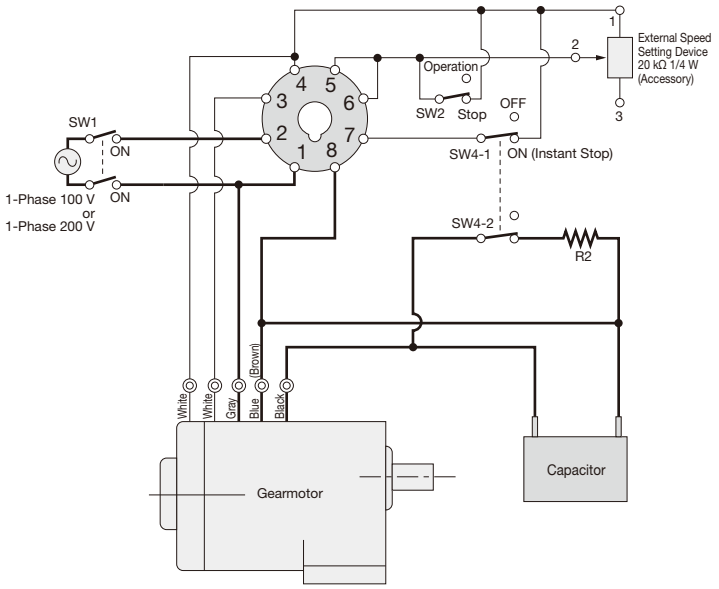

Function	Unidirectional operation, speed change	
	Instant stop	
	——	Slow Start Slow Down
Motor Power	15 W to 25 W	15 W to 25 W
Applicable model	SCP-101L	SCP-102L SCP-103L
	SCP-201L	SCP-202L SCP-203L

	Power	Remarks
SW1	125 VAC/5 A or more 250 VAC/5 A or more	Power switch
SW2	20 VDC 10 mA	Operation/Stop
SW4-1	20 VDC 10 mA	For instant stop The switches shall be operated in synchronization with each other.
SW4-2	125 VAC/5 A or more 250 VAC/5 A or more	
R2	10 Ω·10 W	Option (OP-TRH10)

Note 1: (Brown) means 200 V.
Note 2: The slow start/slow down function becomes enabled when SW2 is turned on and off.
Note 3: To protect the contact SW4-2, use a CR method (resistance: 120 Ω, capacitor: 0.1 μF/500 V).
Note 4: Do not start and stop the controller by operating SW1. This may damage the controller in some cases.

● Rotational Direction

To change the rotational direction, switch between "Blue (Brown)" and "Black."

- When changing the speed with the controller without using the external speed setting device, remove the external speed setting device in the circuit, and run and stop the gearmotor with SW2.

■ Unidirectional operation, speed change, instant stop, slow start/slow down (40 W to 90 W)

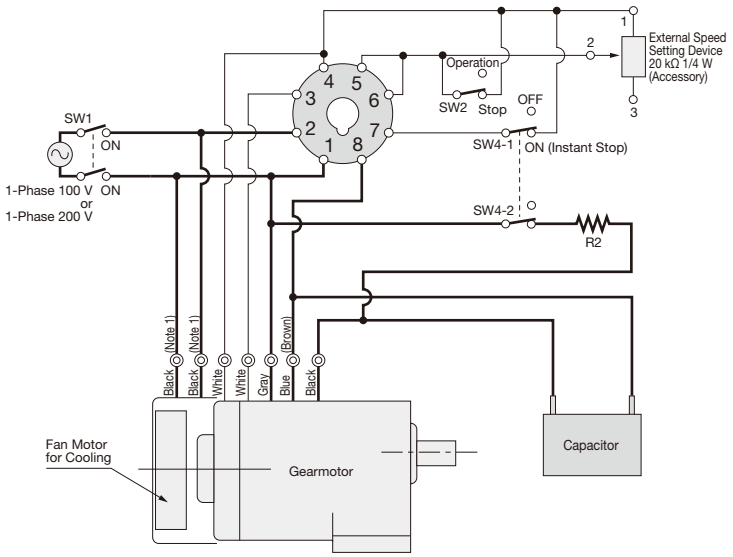

Function	Unidirectional operation, speed change	
	Instant stop	
	——	Slow Start Slow Down
Motor Power	40 W to 90 W	40 W to 90 W
Applicable model	SCP-101L	SCP-102L SCP-103L
	SCP-201L	SCP-202L SCP-203L

	Power	Remarks
SW1	125 VAC/5 A or more 250 VAC/5 A or more	Power switch
SW2	20 VDC 10 mA	Operation/Stop
SW4-1	20 VDC 10 mA	For instant stop The switches shall be operated in synchronization with each other.
SW4-2	125 VAC/5 A or more 250 VAC/5 A or more	
R2	10 Ω·10 W	Option (OP-TRH10)

Note 1: The fan motor lead wire is attached only to a gearmotor with a motor power of 60 W or 90 W.
Note 2: (Brown) means 200 V.
Note 3: The slow start/slow down function becomes enabled when SW2 is turned on and off.
Note 4: To protect the contact SW4-2, use a CR method (resistance: 120 Ω, capacitor: 0.1 μF/500 V).
Note 5: Do not start and stop the controller by operating SW1. This may damage the controller in some cases.

● Rotational Direction

To change the rotational direction, switch between "Blue (Brown)" and "Black."

- When changing the speed with the controller without using the external speed setting device, remove the external speed setting device in the circuit, and run and stop the gearmotor with SW2.

■ CW/CCW operation, speed change, instant stop, slow start/slow down (15 W to 25 W)

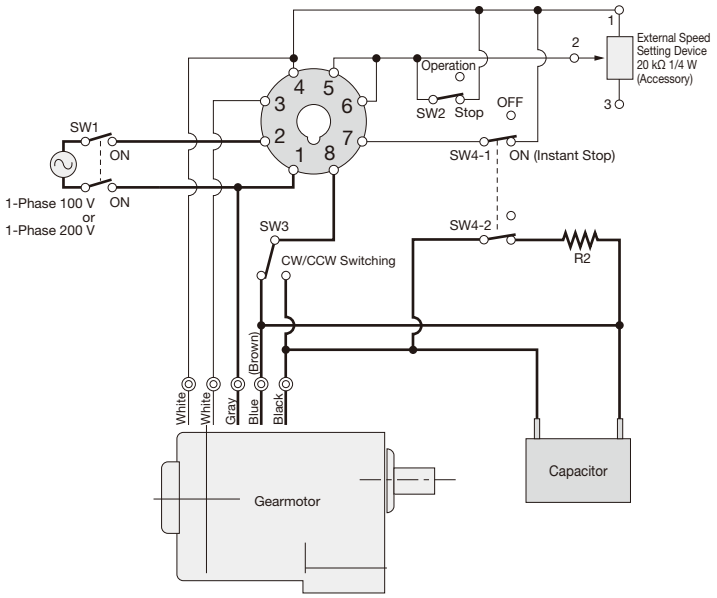

Function	CW/CCW run, speed change	
	Instant stop	
	——	Slow Start Slow Down
Motor Power	15 W to 25 W	15 W to 25 W
Applicable model	SCP-101L	SCP-102L SCP-103L
	SCP-201L	SCP-202L SCP-203L

	Power	Remarks
SW1	125 VAC/5 A or more 250 VAC/5 A or more	Power switch
SW2	20 VDC 10 mA	Operation/Stop
SW3	125 VAC/5 A or more 250 VAC/5 A or more	CW/CCW Operation
SW4-1	20 VDC 10 mA	For instant stop The switches shall be operated in synchronization with each other.
SW4-2	125 VAC/5 A or more 250 VAC/5 A or more	
R2	10 Ω·10 W	Option (OP-TRH10)

Note 1: (Brown) means 200 V.
Note 2: The slow start/slow down function becomes enabled when SW2 is turned on and off.
Note 3: To protect the contact SW4-2, use a CR method (resistance: 120 Ω, capacitor: 0.1 μF/500 V).
Note 4: Do not start and stop the controller by operating SW1. This may damage the controller in some cases.

● Rotational Direction

Before switching the rotational direction (SW3), be sure to stop the motor.

- When changing the speed with the controller without using the external speed setting device, remove the external speed setting device in the circuit, and run and stop the gearmotor with SW2.

■ CW/CCW operation, speed change, instant stop, slow start/slow down (40 W to 90 W)

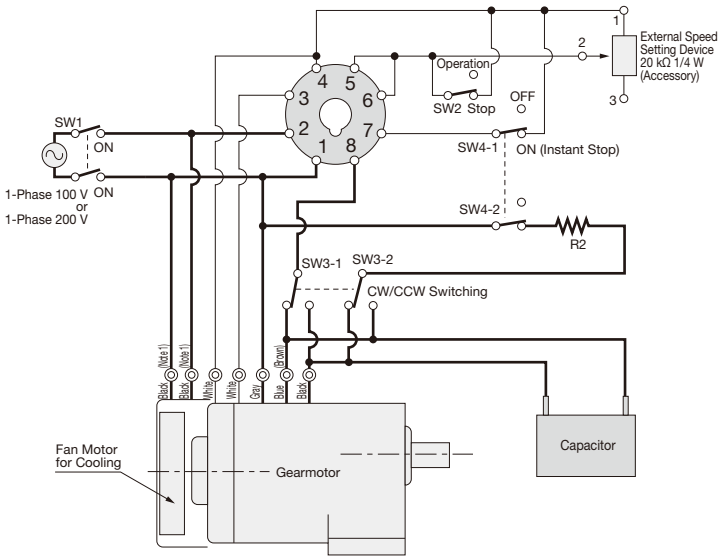

Function	CW/CCW run, speed change	
	Instant stop	
	——	Slow Start Slow Down
Motor Power	40 W to 90 W	40 W to 90 W
Applicable model	SCP-101L	SCP-102L SCP-103L
	SCP-201L	SCP-202L SCP-203L

	Power	Remarks
SW1	125 VAC/5 A or more 250 VAC/5 A or more	Power switch
SW2	20 VDC 10 mA	Operation/Stop
SW3-1	125 VAC/5 A or more 250 VAC/5 A or more	CW/CCW Operation The switches shall be operated in synchronization with each other.
SW3-2	125 VAC/5 A or more 250 VAC/5 A or more	
SW4-1	20 VDC 10 mA	For instant stop The switches shall be operated in synchronization with each other.
SW4-2	125 VAC/5 A or more 250 VAC/5 A or more	
R2	10 Ω·10 W	Option (OP-TRH10)

Note 1: The fan motor lead wire is attached only to a gearmotor with a motor power of 60 W or 90 W.
Note 2: (Brown) means 200 V.
Note 3: The slow start/slow down function becomes enabled when SW2 is turned on and off.
Note 4: To protect the contact SW4-2, use a CR method (resistance: 120 Ω, capacitor: 0.1 μF/500 V).
Note 5: Do not start and stop the controller by operating SW1. This may damage the controller in some cases.

● Rotational Direction

Before switching the rotational direction (SW3), be sure to stop the motor.

- When changing the speed with the controller without using the external speed setting device, remove the external speed setting device in the circuit, and run and stop the gearmotor with SW2.

■ Parallel operation

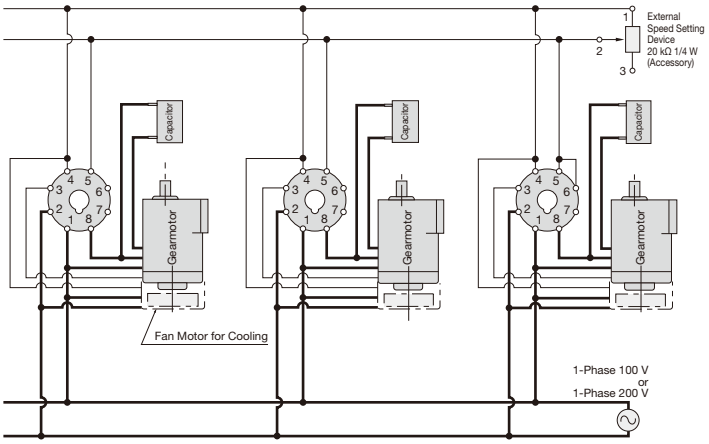

Note 1: Short terminals 5 and 6 on any one of the controllers.

Function	Unidirectional operation, speed change
	Slow start/Slow down
	Parallel operation
Motor Power	15 W to 90 W
Applicable model	SCP-103L
	SCP-203L

Note 1: The dashed line indicates a 60 W or 90 W gearmotor.

■ Changing the speed by the external DC voltage

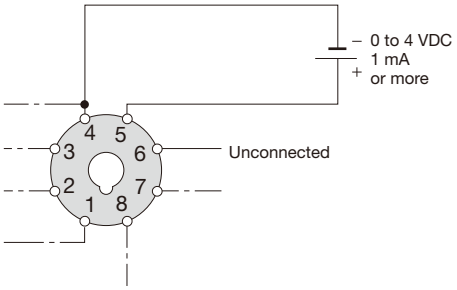

Note 1: Do not connect the DC power supply with incorrect polarity.
Note 2: The connections indicated by the dotted line are based on "Wiring diagrams ① to ⑦." However, do not connect anything to pin ⑥.
Note 3: Be sure to insulate the output of the DC power supply from the AC input.

Precautions for Connection

■ Countermeasures against noise

The gearmotor does not malfunction due to incoming noise under regular usage conditions.
However, the control of the gearmotor occasionally becomes unstable near high-voltage equipment or in a place where high electric power is frequently turned on and off. As a countermeasure against incoming noise, connecting a noise filter is very effective.
In addition, phase control by a TRIAC may cause radio noise interference. Also in this case, it is recommended to connect a noise filter.

■ Capacitor

A capacitor is indispensable for the operation of a speed control gearmotor. Upon use, please connect the included capacitor to the product.
All Single-phase motors are connected by a reversible connection (three lead wires) and can therefore run in the CW and CCW directions as Three-phase motors do.
For the capacity of the capacitor, refer to the performance table.
For the shape and dimensions of the capacitor, refer to page 546.

● Connection diagram

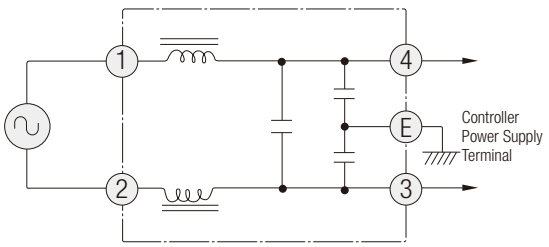

Terminal Box (Option)

The P Type speed control gearmotor can be equipped with a terminal box. If you need one, please inform us when placing an order.

■ Types and structures (limited to P Type)

● For the connection method of C Type terminal boxes, refer to the table shown below.

1-Phase 100 V and 200 V (15 W to 40 W)

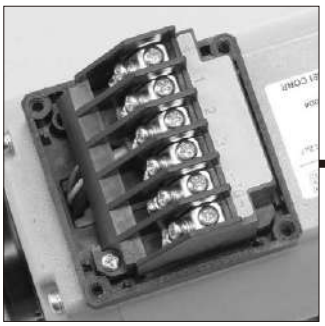

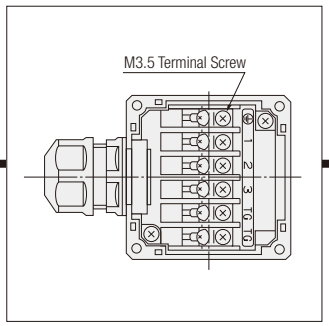

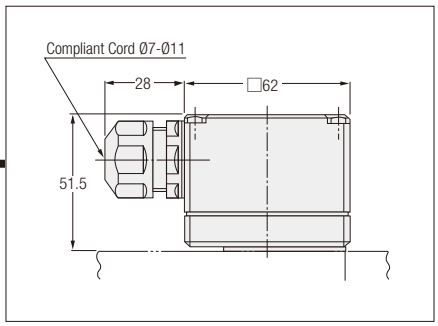

● For the connection method of C Type terminal boxes, refer to the table shown below.

1-Phase 100 V and 200 V (60 W, 90 W)



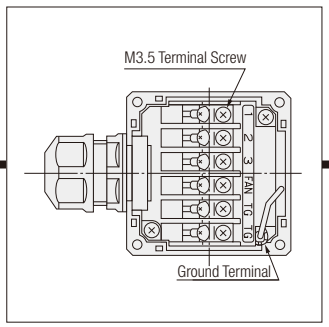

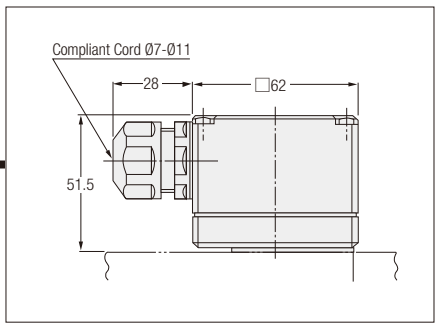

Note: The forced fan lead wire is drawn in from outside the terminal box and connected to a terminal.

● Method of connecting the wires of a gearmotor with a C Type terminal box

Refer to the table shown below as well as the wiring diagram on pages 635 to 638.

Terminal Code	Connection Method	Remarks
⏚	Grounding	(Note 1)
1	Same as blue (brown) in the wiring diagram	
2	Same as black in the wiring diagram	
3	Same as gray in the wiring diagram	
FAN	Connect to pin No. 2 of the controller.	Only 60 W or 90 W gearmotor
TG	Same as white in the wiring diagram	

Note 1: In the case of a 60 W or 90 W gearmotor, connect this terminal to the green lead wire on the back side of the terminal block.

Speed Control Gearmotors Options

■ Extension cord with connector



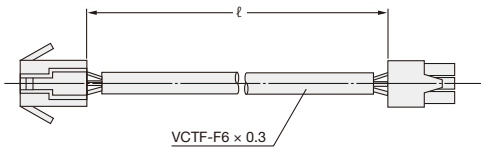

Product Name	ℓ (m)
OP-C1	1
OP-C2	2
OP-C3	3
OP-C4	4

- Use the cord for the extension of the U Type cord.
- Connect a lead wire not longer than 5m between the controller and the gearmotor.

■ External resistor for instant stop/OP-TRH10

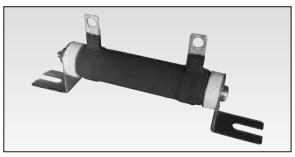

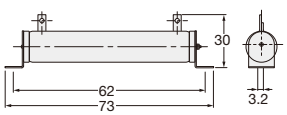

- Use this resistor when using the instant stop function.

■ Front side connection socket/OP-8PFA

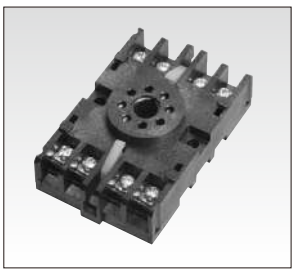

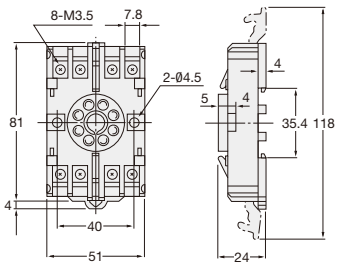

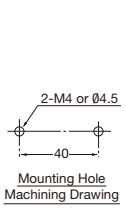



When a front side connection socket is attached (photo: SCP-103L)

■ External speed setting device/OP-RV-24B20K

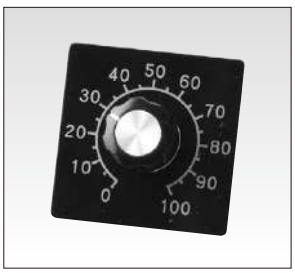

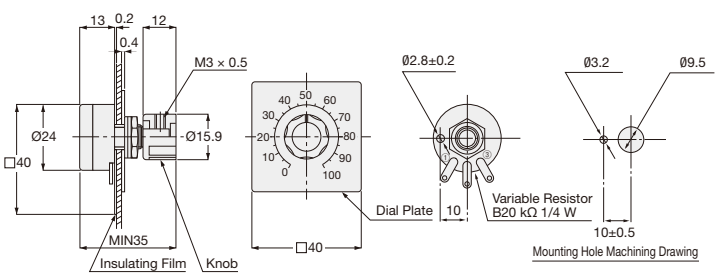

- This device (one set) is attached to the P Type controller as a standard item, and use it for multistep speed changes.

Thermal Protector (Optional)

A thermal protector can be attached to prevent the motor from burning.
However, please note that a thermal protector cannot be installed to the listed models below.

Type	Frame Size	Motor Power
G	12	3-phase: 40 W, 60 W 1-phase: 40 W, 60 W
	22	
H	15	
	22	
F2 (F2S)	12	
F2 (F2F)	15	

All thermal protectors are of a signal wire extraction type.
For built-in types, please contact us.

● Example of use of a thermal protector (3-phase induction motor)

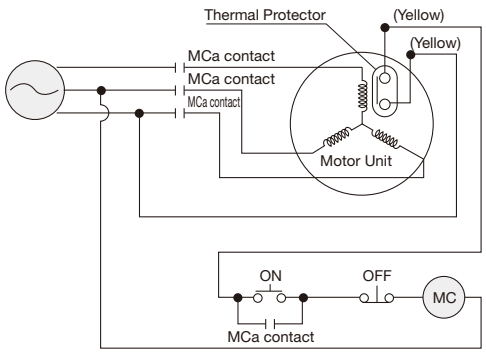

(MC) : Relay Coil
MCa : Electro Magnetic Contactor a Contact

Note The ON-OFF switch is to turn on and off the motor. When the temperature of the motor rises, the contacts of the thermal protector will open, and the power supply will be turned off through the (MC). When the temperature of the motor lowers, the contacts of the thermal protector will automatically close again, but this wiring example will not permit the motor to run unless the ON pushbutton is pressed.

For more information, please contact your nearest Sales Office or the CS Center.

Precautions for Use

■ **Before using our products, carefully read the Detailed Instruction Manual.**

Installation Location

	Standard Specification	Water-resistant Specification
Ingress Protection Rating	Differs depending on the model.	IP65
Ambient temperature	-10 °C to 40 °C	-10 °C to 40 °C
Ambient Humidity	85 % max (No condensation)	100 % max (No condensation)
Altitude	1,000 m max	1,000 m max
Installation Environment	A well ventilated place free from corrosive gas, explosive, vapor, and/or chemicals. Not to be exposed to direct rain. Not to be exposed to direct sunlight. The brake should not be exposed to water, powders, oil/greases, or oil mist. Models with water protection rating IPX0 shall not be exposed directly to water.	A place free from corrosive gas, explosive gas, and/or vapor. Not to be exposed to direct strong rain, and winds. Not to be exposed to direct sunlight. Not to be used underwater, environments with exposure to high pressure water splashes, and exposure to cleansing chemicals.

Note 1: The ambient temperature for capacitor run type Single-phase motors is -10 °C to 0 °C.

Installation Surface

Fasten the gearmotor to a vibration-free, machined, flat surface using four bolts. For the installation of a right angle hollow bore type on a shaft, refer to pages 997 to 1000.

Installation Orientation

All models adopt a grease lubrication method and can therefore be installed in any orientation.

Connection with Application

1. H_7 fit is recommended for a hole for a coupling, sprocket, pulley, gear, etc. to be attached to the gearbox shaft.
2. In direct coupling, accurately align the center of the gearbox shaft and that of the mating shaft.
3. In chain, belt, or gear engagement, keep the gearbox shaft and the mating shaft parallel accurately to each other, and install the device so that the line connecting the centers of both gears is perpendicular to the shafts.
4. When attaching a coupling or application to the output shaft, do not apply strong impacts via hammer or similar tool. The bearing may get damaged and cause an abnormal sound, vibrations, or damage.

Precautions for Operation

1. Be sure to operate the motor with the load torque, the load moment of inertia J, and the O.H.L. kept within the allowable values.
2. CW and CCW rotations by plucking adversely affects the gearmotor and the application. To prevent it, temporarily stop the gearmotor, and then start it in the reverse direction.
3. Do not touch the gearmotor during energization and for a while after the power supply is turned off, because it is hot. You may suffer burns or injuries.
4. When running a Single-phase motor in the reverse direction, be sure to stop the motor and then start it in the reverse rotation. Failure to follow this precaution may put the gearmotor out of control because the rotational direction remains unchanged.
5. Do not perform an impact stop to the Single-phase motor. Failure to follow this precaution may cause the motor to run in the reverse rotational direction and go out of control.
6. Take care to keep the surface temperature of the MINI Series motor and gearbox below 90 °C.
7. Take care to keep the surface temperature of the MID Series motor below the value calculated by adding the temperature rise value shown in the table below to the ambient temperature.

Motor Power [kW]	Temperature Rise [°CUP]	Ambient temperature At 25°C [°C]
0.1	50	75
0.2	70	95
0.4	60	85
0.75	40	65
1.5	40	65
2.2	40	65

Note 1: The ambient temperature is -10 °C to 40 °C.
Note 2: The temperature rise is the value under a 100 % load. If you are concerned about a temperature rise, please contact your nearest Sales Office or the CS Center.

Rated Currents

The rated current values shown in the motor specifications on pages 622 to 625 are the rated current values of motors alone. With regard to gearmotors with a brake, it is necessary to consider the current value flowing through the brake as needed. For more details, please contact your nearest Sales Office or the CS Center.

Lubrication

All models utilize grease lubrication and are shipped from our factory with specified amounts of high-grade grease sealed. The grease used is a grease containing an extreme pressure additive equivalent to Class NLGI-0 or Class 0.

When using an inverter (frequency conversion device) to convert the speed of the GTR gearmotors

①Please note that when the gearmotor is used in combination with an inverter and runs at low speed, it may cause an unusual temperature rise. Moreover, a gearmotor with a brake may malfunction due to a voltage fluctuation. To prevent this, wire the brake by bypassing the inverter.
For more information, refer to Combination of Gearmotor and Inverter/VFD on page 591.

②Electric erosion of bearing due to inverter operation.
When a gearmotor is driven in combination with an inverter, the bearing causes electric erosion, although very rare, depending on the state of the grease sealed in the bearing, the wiring method, the operating conditions, etc.
Please consult us if you require advice on potential solutions.

Attaching and detaching the F2 Type safety cap

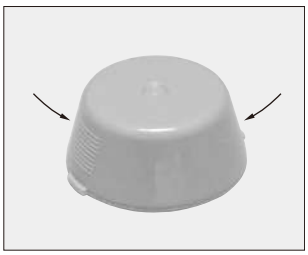

Attach and detach the safety cap by lightly pushing the portion indicated by the arrow. (Do not strongly push it.)

MID Series 1-Phase Capacitor Run Type

1-phase capacitor run type motors have built-in thermal protectors.A thermal protector can be installed on a capacitor run type motor. If the motor reaches the specified temperature, the thermal protector will be activated to stop the motor. (Operating temperature of a built-in thermal protector: 120 ±5{1>°C<1}) In such a case, only motors with a brake will stop and will not retain the load because the brake remains released.
Failure to follow this precaution may result in injury or damage to the device.
The built-in thermal protector is an automatic restoration type; the motor will automatically restart as it cools down. Be sure to turn off the power before inspection/ maintenance work. Failure to follow this precaution may result in injury due to sudden start of the motor.
In addition, do not energize the brake coil continuously when the motor is inactive.

Precautions about the attachment of a motor to an S-Type gearboxes

1. Wipe rust, dust, rust preventive oil, etc. clean off the motor shaft.
2. When inserting the motor, do not hit the motor unit or the gearbox unit, or utilize the clamping force of the bolts. If the motor is forcedly inserted, the excessive load may be applied to the motor shaft, and this may result in damaged bearing or an unusual sound, etc.
3. No input pinion key material is attached to the S-Type gearbox. Thus, use the motor-side key material. However, a key material is included with 0.1 kW and 0.2 kW motors.
   The included key is designed for transition fit.
   Beware of the dropping of the key when installing the motor.
4. If the mass (weight) of the motor to be attached to the S-Type gearbox is heavy, it may impose an excessive burden on the installation flange, resulting in a problem. Use the table shown below as a guideline.

Note 1: If a motor exceeding the moment limitation is installed, the case and other parts may get damaged, and the motor may drop.
Note 2: Failures attributable to the installation of a motor exceeding the moment limitation are excluded from the coverage of our warranty.

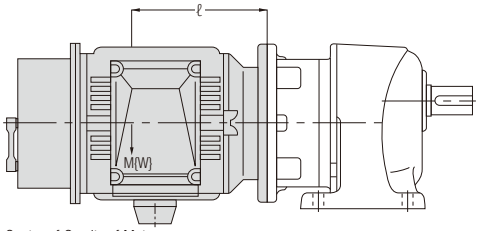

ℓ: Center of Gravity of Motor
M: Motor Weight
{W: Motor Weight}

Power Class 4 poles Motor	Moment Limitation ℓ × M
0.1, 0.2 kW	27 N·m or less
0.4 kW	31 N·m or less
0.75 kW	34 N·m or less
1.5 kW	83 N·m or less
2.2 kW	93 N·m or less

MEMO

Option

INDUCTION GEAR MOTOR

P.646 **Torque Arm**
P.648 **R Flange**
P.649 **Surge Suppressors for Brake Wiring**
P.649 **Thermal Protector**
P.650 **Option Codes**
P.651 **Motor Shaft Extension**
P.652 **Encoders**
P.654 **Forced Fan**
P.655 **Cable Glands**
P.655 **Output Shaft Tapping (Threading)**
P.656 **Output Shaft Hole Diameter Custom Specifications**

Option

Torque Arm

MINI Series

■ F2S Type

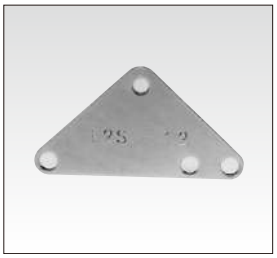

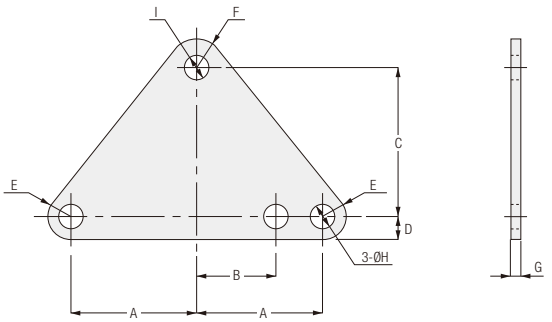

Part No.	Applicable Frame Size	A	B	C	D	E	F	G	H	I	Weight (g)
TAF2S-12	12	43	24	37.5	7	R7	R9	3.2	8.4	Ø7	75
TAF2S-15	15	48	30	56.5	9	R9	R11	3.2	10.5	Ø9	125

● Torque Arm Specifications

Material	Surface Treatment	Color
SS400	Trivalent Chromate	White

MID Series

■ FS/FAS Type

<Figure-1>

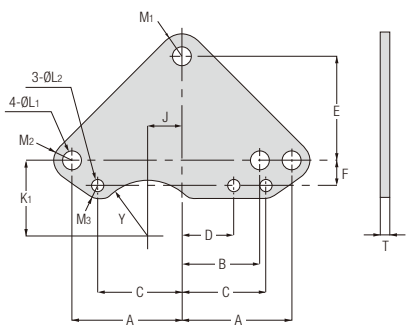

<Figure-2>

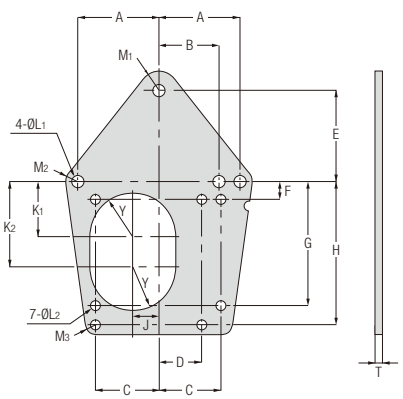

Part No.	Applicable Frame Size	Figure	A	B	C	D	E	F	G	H	J	K_1	K_2	L_1	L_2	M_1	M_2	M_3	Y	T	Weight (kg)
TA-25	25	1	63	47	47	31	61	16	—	—	19	44	—	11	6.5	R15	R10.5	R7	R34	4.5	0.3
TA-30	30	1	70	52	53	35	70	17	—	—	20	50	—	11	9	R15	R12	R9	R39	6	0.5
TA-35	35	2	82	62	64	44	94	18	126	146	26	56	88	13	9	R18	R12	R10	R43.5	6	1.2
TA-45	45	2	102	72	80	50	110	22	152	182	32	70	104	15	11	R20	R15	R11	R51	9	3.0
TA-55	55	2	129	93	97	61	160	32	190	226	39	90	132	18	13	R25	R20	R13	R70	9	4.8

● Torque Arm Specifications

Material	Surface Treatment	Color
SS400	Trivalent Chromate	White

■ F3S Type

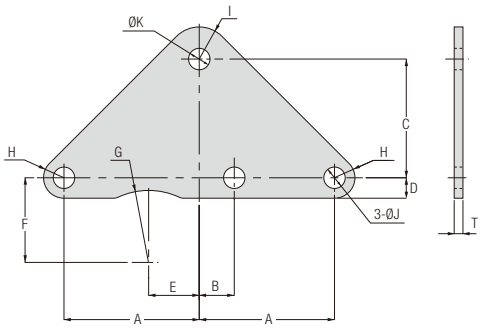

Part No.	Applicable Frame Size	Power	Applicable Reduction Ratio	A	B	C	D	E	F	G	H	I	J	K	T	Weight (kg)
TAF3S-20-2	20	0.2 kW	1/5 to 1/30	53.5	23.5	52	10.5	—	—	—	R10.5	R11	11	9	3.2	0.1
		0.1 kW	1/5 to 1/60													
TAF3S-25-2	25	0.4 kW	1/5 to 1/30	60	27	61	10.5	16.5	43.5	R37	R10.5	R15	11	9	3.2	0.2
		0.2 kW	1/5 to 1/60													
TAF3S-25-3		0.1 kW	1/80 to 1/240	69.5	17.5	61	10.5	26	43.5	R37	R10.5	R16.5	11	11	4.5	0.2
TAF3S-30-2	30	0.75 kW	1/5 to 1/30	69.5	26.5	70	10.5	21.5	48	R41.5	R10.5	R15	11	11	4.5	0.3
		0.4 kW	1/5 to 1/60													
TAF3S-30-3		0.2 kW	1/80 to 1/240	78	14	70	12	32	46	R41.5	R12	R16.5	13.5	13.5	6	0.4
TAF3S-35-2	35	1.5 kW	1/5 to 1/30	80.5	31.5	94	12	24.5	56	R46.5	R12	R18	13.5	13.5	6	0.6
		0.75 kW	1/5 to 1/60													
TAF3S-35-3		0.4 kW	1/80 to 1/240	97	11	94	15	43	54	R46.5	R15	R22.5	17.5	17.5	9	1.2
TAF3S-45-2	45	1.5 kW	1/5 to 1/60	103.5	42.5	110	15	—	—	—	R15	R20	17.5	17.5	9	1.4
		2.2 kW	1/5 to 1/30													
TAF3S-45-3		0.75 kW	1/80 to 1/240	118	20	110	18.5	49	69	R54	R18.5	R28.5	22	22	9	1.7

● Torque Arm Specifications

Material	Surface Treatment	Color
SS400	Trivalent Chromate	White

R Flange

Induction Gearmotors

■ FS/FAS Type (Right Angle Hollow Bore)

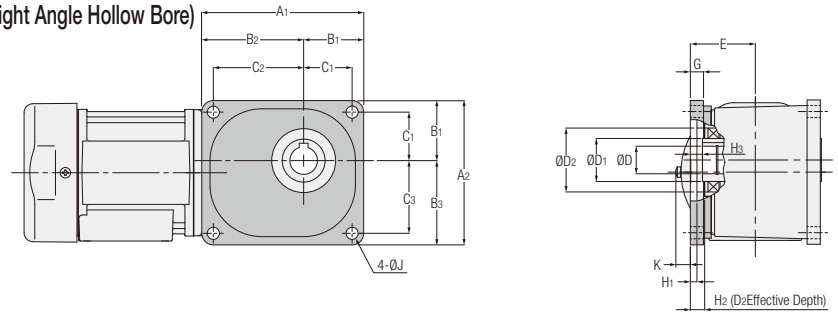

Part No.	Applicable Frame Size	A_1	A_2	B_1	B_2	B_3	C_1	C_2	C_3	E	G	H_1	H_2	H_3	D_2 (H8)	Output Shaft		J	K Note 1, Note 2
																D_1	D (H8)		
RF-25	25	147	131	54.5	92.5	76.5	44	82	66	59	12	6	12	11	58	39	25	11	13.5 (—)
RF-30	30	164	146	62	102	84	50	90	72	65	14	5	15	14	65	44	30	11	7.5 (7.5)
RF-35	35	188	168	68	120	100	56	108	88	70	16	3	18	17	72	49	35	13	2.5 (2.5)
RF-45	45	234	204	85	149	119	70	134	104	80	18	3	22	21	85	64	45	15	— (—)
RF-55	55	298	262	110	188	152	90	168	132	98	22	6	17	16	100	79	55	18	— (—)

Note1: The K dimension is the value for gearmotor with brake.
Note2: The value in brackets is the IP65 gearmotor value.
Note3: For 1-Phase cases, please contact your nearest Sales Office or the CS Center.

■ FF Type (Right Angle Shaft)

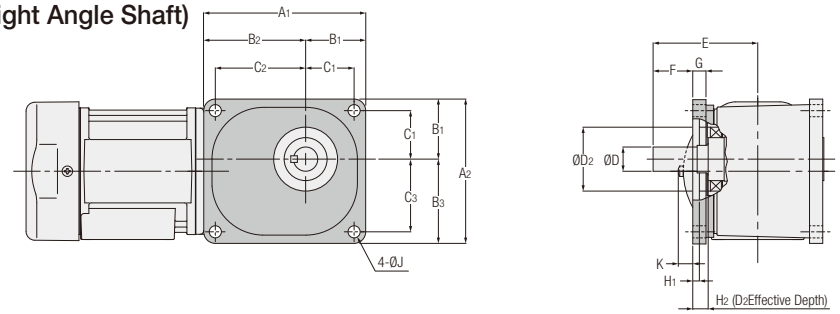

Part No.	Applicable Frame Size	A_1	A_2	B_1	B_2	B_3	C_1	C_2	C_3	E	G	H_1	H_2	D_2 (H8)	Output Shaft		J	K Note 1, Note 2
															F	D (h6)		
RF-25	22	147	131	54.5	92.5	76.5	44	82	66	95	12	6	12	58	36	22	11	13.5 (—)
RF-30	28	164	146	62	102	84	50	90	72	107	14	5	15	65	42	28	11	7.5 (7.5)
RF-35	32	188	168	68	120	100	56	108	88	124	16	3	18	72	54	32	13	— (—)
RF-45	40	234	204	85	149	119	70	134	104	144	18	3	22	85	64	40	15	— (—)

Note1: The K dimension is the value for gearmotor with brake.
Note2: The value in brackets is the IP65 gearmotor value.

● R Flange Specifications

Part No.	Applicable Frame Size	Weight (kg)	Material	Color
RF-25	25·22	0.5	Aluminum Casting	Gray
RF-30	30·28	0.5	Aluminum	
RF-35	35·32	1.0	Aluminum Casting	
RF-45	45·40	2.0		
RF-55	55	7.0	Cast Iron	

Surge Suppressors for Brake Wiring

■ For 200 V Class Motors with a Brake (OP-ERZV10D471)



● Use a surge suppressor for the contact of a brake DC switching connection to extinguish sparks.

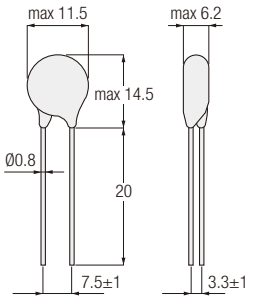

■ For 400 V Class Motors with a Brake (OP-ERZV10D911)



● Use a surge suppressor for the contact of a brake DC switching connection to extinguish sparks.

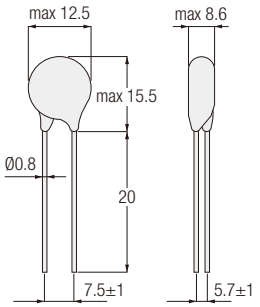

Thermal Protector (Optional)

A thermal protector can be attached to prevent the motor from burning.
However, please note that a thermal protector cannot be installed to the listed models below.

Type	Frame Size	Motor Power
G	12	3-phase: 40 W, 60 W 1-phase: 40 W, 60 W
	22	
H	15	
	22	
F2 (F2S)	12	
F2 (F2F)	15	

All thermal protectors are of a signal wire extraction type.
For built-in types, please contact us.

● Example of use of a thermal protector (3-phase induction motor)

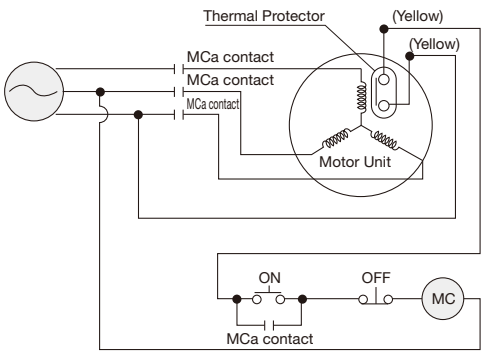

(MC) : Relay Coil
MCa : Electro Magnetic Contactor a Contact

Note The ON-OFF switch is to turn on and off the motor. When the temperature of the motor rises, the contacts of the thermal protector will open, and the power supply will be turned off through the (MC). When the temperature of the motor lowers, the contacts of the thermal protector will automatically close again, but this wiring example will not permit the motor to run unless the ON pushbutton is pressed.

For more information, please contact your nearest Sales Office or the CS Center.

Option Codes

We can deal with orders for specification changes and additional work as described below as options. Use options according to the usage of the product.
You can also select combinations of multiple options. For details, please refer to the table shown below.

Gearhead Type						Motor Type							Brake Specifications	Option	
Series	Mount	Frame Size	Shaft Arrangement	Reduction Ratio	–	Motor Type	Motor Specifications	Motor Power	Number of Phases	Supply Voltage	Standards	Terminal Box	Brake	Option	Option Code
G3	L	28	N	5	–	M	R	08	T	N	N	T	B2	X	AA
①	②	③	④	⑤		⑥	⑦	⑧	⑨	⑩	⑪	⑫	⑬	⑭	⑮

1. Add an “X” and a desired option code to the end of the model name when ordering.
2. If you order multiple options, they will be marked on the nameplate in the order shown in [Nameplate Notation Order] in the table below.
   [Example] If you have ordered AC switching A [AA], box position (top) [TZ], hole position (lower) [H6], encoder (100 P/R) [X0], the order of the option code following the option “X” of the model will be X0TZH6AA.
3. Available options differ depending on the model. For more information, please refer to the page detailing each option.
4. There are options that cannot be used in combination with others. For more information, please refer to the page detailing each option.

* For more information, please contact your nearest Sales Office or the CS Center.

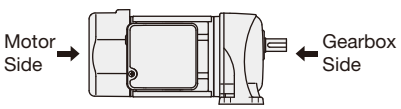

● List of Option Codes

page	Option Code	Description	Nameplate Notation Order
Motor rear special specifications	X6	The motor will be shipped with the rear-side motor shaft extended.	1
	X0	Shipped with an encoder (A/B/Z, 100P/R, line driver).	2
	X1	Shipped with an encoder (A/B/Z, 1024P/R, line driver).	
	X2	Shipped with an encoder (A/B/Z, 1024P/R, open collector).	2
	X7	The motor will be shipped with a forced fan attached.	3
Terminal Box	CC	The motor will be shipped together with a cable gland for T Type terminal box.	4
	T3	The position of the terminal box will be changed to the (right) when viewed from the motor side.	5
	T6	The position of the terminal box will be changed to the (bottom) when viewed from the motor side.	
	T9	The position of the terminal box will be changed to the (left) when viewed from the motor side.	
	TZ	The position of the terminal box will be changed to the (top) when viewed from the motor side.	
	H3	The hole direction of the terminal box will be changed to the gearhead side.	6
	H6	The hole direction of the terminal box will be changed to the (bottom). (Note 1)	
	HZ	The hole direction of the terminal box will be changed to the (top). (Note 1)	
Manual release lever	R1	The position of the manual release lever will be changed to the (lower right) when viewed from the motor side.	7
	R3	The position of the manual release lever will be changed to the (right) when viewed from the motor side.	
	R6	The position of the manual release lever will be changed to the (bottom) when viewed from the motor side.	
	R7	The position of the manual release lever will be changed to the (lower left) when viewed from the motor side.	
	R9	The position of the manual release lever will be changed to the (left) when viewed from the motor side.	
	RZ	The position of the manual release lever will be changed to the (top) when viewed from the motor side.	
Brake wiring for built-in rectifier	AB	The rectifier will be built in the terminal box, and the motor will be shipped with AC switching B connected.	8
	AA	The rectifier will be built in the terminal box, and the motor will be shipped with AC switching A connected.	
	DC	The rectifier will be built in the terminal box, and the motor will be shipped with DC switching connected.	
Output Shaft	40	The output shaft will be changed to an output shaft with shaft end tapping. (The G3 type standard specification and the water-resistant carbon steel output shaft are provided with shaft end tapping as a standard item.)	9
	F2	Changes the bore diameter of the right angle hollow bore from Ø25 to Ø20.	
	F3	Changes the bore diameter of the right angle hollow bore from Ø30 to Ø25.	
	F4	Changes the bore diameter of the right angle hollow bore from Ø35 to Ø30.	
	F5	Changes the bore diameter of the right angle hollow bore from Ø45 to Ø35.	
	F6	Changes the bore diameter of the right angle hollow bore from Ø45 to Ø40.	
	F7	Changes the bore diameter of the right angle hollow bore from Ø55 to Ø45.	
	F8	Changes the bore diameter of the right angle hollow bore from Ø55 to Ø50.	

Note 1: The gearbox side hole and the motor side hole will always be set in the positions “3” and “9,” respectively, regardless of the position of the terminal box.
Note 2: Option parts, such as torque arms and surge suppressors, are not assigned with option codes.

Motor Shaft Extension

The motor shaft can be extended from the rear end of the motor. If you require motor shaft extension, order it with the option code shown in the table below.
Since the rotary portion will be exposed during use, please take a measure to prevent any contact with it for safety. (Installing a cover, etc.)
For more details, please contact your nearest Sales Office or the CS Center.

■ Target Models

Induction Gearmotors
0.4 kW to 2.2 kW: No Brake/Brakemotor (except water-resistant IP65)

Option	Option Code
X	X6

Model example: Standard specification G3L28N30-MM04TNNTB2 ⇒ Motor shaft extension G3L28N30-MM04TNNTB2XX6

■ Motor Shaft Extension Specifications

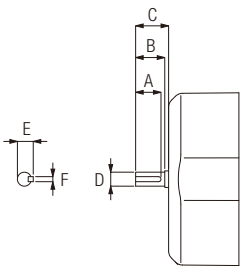

Motor Power	A	B	C	D	E	F
0.4 kW	20	23	26	Ø11h7	12.5	4
0.75 kW	20	23	25	Ø11h7	12.5	4
1.5 kW	27	30	33	Ø14h7	16	5
2.2 kW	27	30	33	Ø14h7	16	5

■ Product Outline Dimensions

When the shaft is extended, the overall length of the motor will increase For details, please refer to the table shown below.

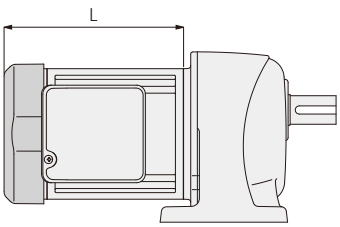

[Figure-1]

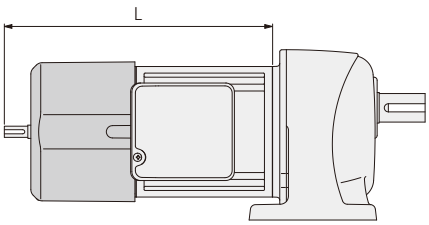

[Figure-2]

Motor Power	Overall length (L)		
	Standard type [Figure-1]		Motor Shaft Extension [Figure-2]
	No Brake	Brakemotor	Common to No brake/brakemotor
0.4 kW	176	196	263
0.75 kW	217	236	301
1.5 kW	252.5	281.5	355.5
2.2 kW	302	331	405

Encoders

An encoder can be attached to the rear of the motor with the specifications shown in the table below. If you require this option, please place an order with the appropriate option code shown in the table below.

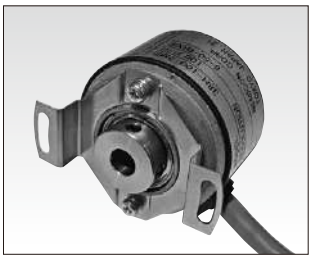

Encoder Appearance
* The encoder will not be visible on the appearance of the product because it will be contained in the fan cover.
* The protective structure of the encoder is IP50.
  Please note that this protective structure is different from the protective structure marked on the nameplate.

■ Target Models

Induction Gearmotors

0.1 kW to 2.2 kW No brake/brakemotor (except water-resistant specification IP65)

Note 1: When it is necessary to adjust the gap of the brake or replace the brake unit, please contact us for repair.

■ Encoder Specifications

Option	Option Code	Specification	
		Number of Pulses	Output Method
X	X0	100 p/r	A/B/Z Line Drive
X	X1	1024 p/r	A/B/Z Line Drive
X	X2	1024 p/r	A/B/Z Open collector

Note 1: If you require an encoder with specifications not listed in the table, it may be manufactured as a custom order. Please consult us

Note 2: When an encoder is to be mounted by the customer, consult us for specifications with just the shaft and mount for encoder mounting.

Note 3: The encoder and shaft are fixed with a set screw with adhesive in order to prevent loosening.Contact us for shipping the product without adhesive.
In this case, please take action to prevent the loosening of the set screw by yourself.

Model example: Standard specification G3L28N30-MM04TNNTB2 ⇒ With an encoder G3L28N30-MM04TNNTB2XX0

■ Electrical Specifications

		X0 / X1	X2
Supply Voltage		4.5 to13.2 VDC	4.5 to 30 VDC
Current Consumption		30 mA MAX	30 mA MAX
Output Voltage	H Level	2.5 V or more	–
	L Level	0.5 V or below	0.5 V or below (at maximum sink)
Maximum Draw-in Current		20 mA	40 mA
Maximum Response Frequency		120 kHz	120 kHz
Rise and Fall Time		100 ns MAX	1 μs MAX

■ Connector Specifications

X0 / X1		
Hirose Electric DF3-9S-2C		
Terminal No.	Color	Connection
1	Red	Vcc
2	Black	0V
3	Green	Sig A
4	Blue	Sig $\overline{A}$
5	White	Sig B
6	Gray	Sig $\overline{B}$
7	Yellow	Sig Z
8	Orange	Sig $\overline{Z}$
9	Black	Shield

X2		
Hirose Electric DF3-6S-2C		
Terminal No.	Color	Connection
1	Red	Vcc
2	Black	0V
3	Blue	Sig A
4	White	Sig B
5	Yellow	Sig Z
6	Black	Shield

■ Waveform Specifications

*The following is the waveform for the reverse motion of the motor.

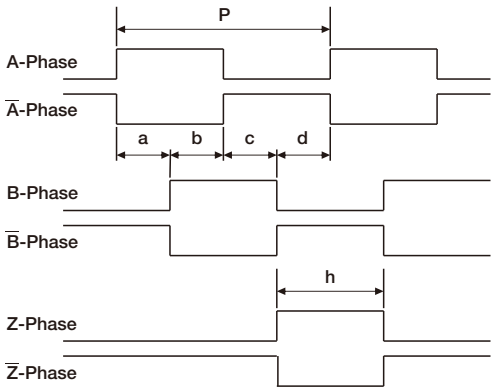

Signal A, B a, b, c, d = (P/4) ± (P/8)
Duty = (P/2) ± (P/4)
Signal Z (P/4) ≤ h ≤ (3P/4)

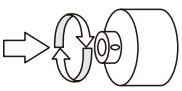

Encoders

■ Product Appearance Dimensions

When an encoder is mounted, the overall length of the motor will increase.
For details, please refer to the table shown below.

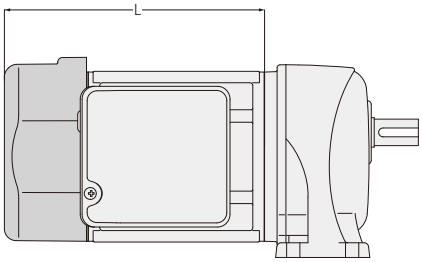

[Standard type appearance example]
*Models without fan cover are available.

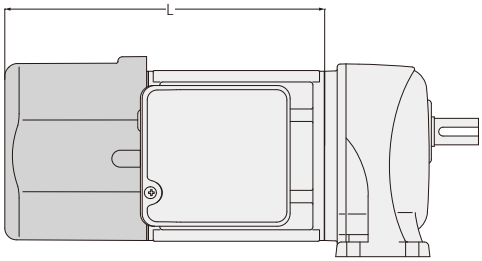

[Encoder-equipped appearance example]

● Induction Gearmotors

Motor Power	Overall length (L)			Encoder Cable Effective Length
	Standard type		With Encoder	
	No Brake	Brakemotor	Common to No brake/ brakemotor	
0.1 kW	114	154	205.5	350
0.2 kW	129	179.5	220.5	350
0.4 kW	176	196	237	350
0.75 kW	217	236	276	300
1.5 kW	252.5	281.5	322.5	250
2.2 kW	302	331	372	250

Note 1: The product will be shipped with the encoder cable drawn out of the gap of the fan cover.
Note 2: Gearmotors with a motor power of 0.1 kW or 0.2 kW does not include the fan cover.

Forced Fan

A forced fan can be attached to the rear of the motor with the specifications shown in the table below. If you require this option, please place an order with the appropriate option code shown in the table below.



■ Target Models

Induction Gearmotors

0.1 kW to 2.2 kW: No brake/brakemotor (except water-resistant specification IP65)

■ Forced Fan Specifications

Option	Option Code	Specification			
		Supply Voltage	Frequency	Speed	Rated Current
X	X7	200 VAC±10 %	50 Hz	2600 r/min	0.05 A
		200 VAC±10 %	60 Hz	3000 r/min	0.04 A

Model example: Standard specification G3L28N30-MM04TNNTB2 ⇒ With forced fan G3L28N30-MM04TNNTB2XX7

■ Product Outline Dimensions

When a forced fan is installed, the overall length of the motor will increase. For details, please refer to the table shown below.

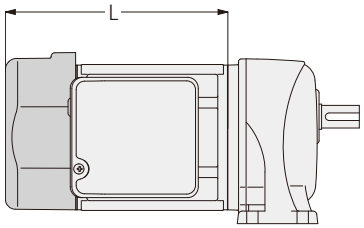

[Figure-1]

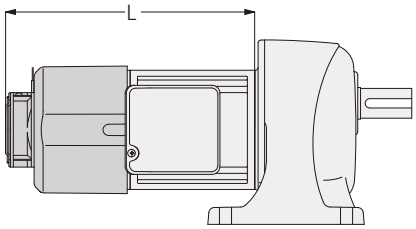

[Figure-2]

Power	Overall length (L)		
	Standard type [Figure-1]		With Forced Fan [Figure-2]
	No Brake	Brakemotor	Common
0.1 kW	114	154	236.5
0.2 kW	129	179.5	251.5
0.4 kW	176	196	268
0.75 kW	217	236	304
1.5 kW	252.5	281.5	353.5
2.2 kW	302	331	403

Note 1: The protective structure of the forced fan is IP10. Please note that this protective structure is different from the protective structure marked on the nameplate.

Note 2: The motor will be shipped with the forced fan cable flied.

Cable Glands

A gearmotor with a T type terminal box can be shipped together with an attachable cable gland. If you require this option, please place an order with the appropriate option code shown in the table below.



■ Target Models

Induction Gearmotors
0.1 kW to 2.2 kW: All models with a T type terminal box

Option	Option Code
X	CC

Model example: Standard specification G3L28N30-MM04TNNTB2 ⇒ With cable gland G3L28N30-MM04TNNTB2XCC

■ Product Outline Dimensions and Specifications

● With a terminal box attached

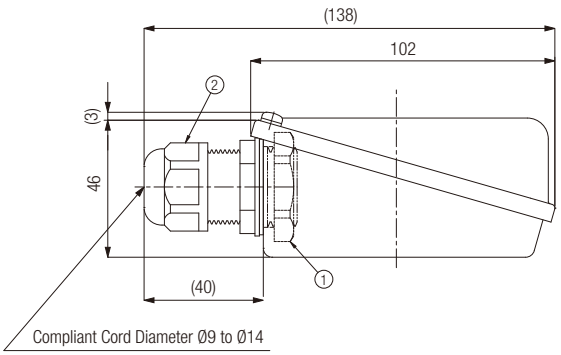

■ Cable Gland Specifications

AVC Corporation of Japan (FGA26S-14B)
Body Material: Nylon 66 (UL94V-2)
IP Rating: IP68/5 atmospheric pressure
Conforming Standard: UL-C & US/CE
Color: Black

Wrench Size Lock/Seal: 33/27

● Tightening Torques (Reference Values)

① Lock nut: 2.4 to 3.4 N·m
② Sealing nut: 1.8 to 2.5 N·m

Note 1: A cable gland will be shipped with the product. Attach the cable gland to the terminal box yourself.
Note 2: Please note that depending on the position of the terminal box and its hole direction, a cable gland may interfere with the peripheral parts when installed, and hinder mounting and wiring.
For more details, please contact your nearest Sales Office or the CS Center.

Output Shaft Tapping (Threading)

The output shaft of the parallel shaft G3 and GA types are tapped to the dimensions shown in the table below (Note 1), but the output shafts of other types are not tapped. If you desire output shaft tapping, we will prepare an output shaft manufactured to the dimensions shown in the table below. Designate these dimensions wherever possible at the time of design. To order tapping, enter “X40” at the end of the model name.
Note 1: Water-resistant specification stainless steel output shafts are not tapped.



Model example: Standard specification H2L22R30-MM02TNNTN ⇒ Output shaft with standard tapping H2L22R30-MM02TNNTNX40

Note 2: The mark “●” in the table indicates a standard stock item. In addition, “▲” indicates that a lead time of about full 10 days is required.
Note 3: Water-resistant specification stainless steel output shafts and dimensions other than those shown in the table below are custom specifications.
Note 4: For lead time, prices, and other details, please contact your nearest Sales Office.

Shaft Diameter (Frame Size)	Size × Pitch × Depth(mm)	G·VG Type (Parallel Shaft)	G3·GA Type (Parallel Shaft)	H·H2 Type (Right Angle Shaft)			F2F·FF·F3F Type (Right Angle Shaft)		
				L Shaft	R Shaft	T Shaft	L Shaft	R Shaft	T Shaft
12/15	M5 × 0.8 × 12	●	Not Available	●	●	●	▲	▲	▲
18	M6 × 1.0 × 15	●	With Output Shaft Tapping	●	●	●	▲	▲	▲
22/28	M8 × 1.25 × 20	With Output Shaft Tapping		●	●	▲	●	▲	▲
32/40	M10 × 1.5 × 25			●	●	▲	●	▲	▲
50	M12 × 1.75 × 30	Not Available		●	●	▲	Not Available	Not Available	Not Available

Note 5: The GA type is available only in frame size 50.

Output Shaft Hole Diameter Custom Specifications

Output shafts with the internal diameters shown in the table below are also available for the FS, FAS and F3S types (right angle hollow bore).
Order a desired shaft diameter with the appropriate option code shown in the table below.

Note 1: It is necessary to examine the strength of the shaft to be inserted.
Note 2: Shafts for reduction ratio 1/5 cannot be manufactured.
Note 3: For lead time, prices, and other details, please contact your nearest Sales Office.

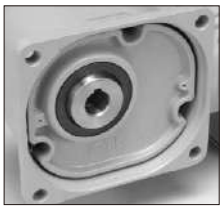

Model name example: Standard specification F3S25N30-MM02TNNTN ⇒ Output shaft diameter Ø20 specification F3S25N30-MM02TNNTNXF2

■ FS/FAS Type (Right Angle Hollow Bore)

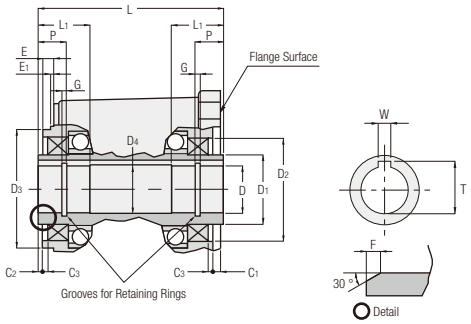

● Right Angle Hollow Bore Detailed Dimensions

Frame Size	Internal Diameter of Right Angle Hollow Bore	D (H8)	D_1	D_2 (H8)	D_3 (h8)	D_4	W	T	L	L_1	P	C_1	C_2	C_3	E	E_1	F	G	Option Code
25	Ø20	Ø20	Ø39	Ø58	Ø66	Ø21	6	22.8	108	27	14	6	2	3	6	0	2	1.15	F2
30	Ø25	Ø25	Ø44	Ø65	Ø75	Ø26	8	28.3	117	33	17	5	2	3	7	0	2	1.35	F3
35	Ø30	Ø30	Ø49	Ø72	Ø85	Ø31	8	33.3	124	38	20	3	2	3	7	0	2	1.35	F4
45	Ø35	Ø35	Ø64	Ø85	Ø100	Ø36	10	38.3	140	50	26	3	2	3	6	0	2	1.75	F5
	Ø40	Ø40	Ø64	Ø85	Ø100	Ø41	12	43.3	140	50	26	3	2	3	6	0	2	1.95	F6
55	Ø45	Ø45	Ø79	Ø100	Ø120	Ø46	14	48.8	181	61	32	5	2	5	10	2	2	1.95	F7
	Ø50	Ø50	Ø79	Ø100	Ø120	Ø51	14	53.8	181	61	32	5	2	5	10	2	2	2.20	F8

Note 1: The FA type is frame size 55 only.

■ F3S Types (Right Angle Hollow Bore)

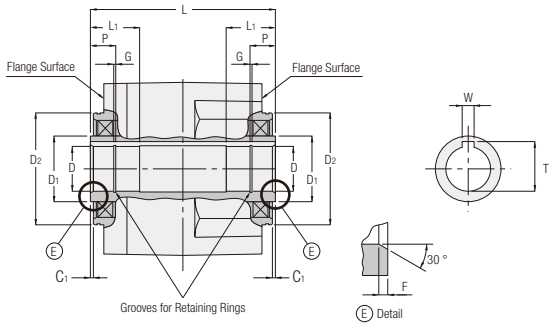

● Right Angle Hollow Bore Detailed Dimensions

Frame Size	Internal Diameter of Right Angle Hollow Bore	D (H8)	D_1	D_2 (h7)	W	T	L	L_1	P	C_1	F	G	Option Code
25	Ø20	Ø20	Ø39	Ø66	6	22.8	118	27	14	2	2	1.15	F2
30	Ø25	Ø25	Ø44	Ø75	8	28.3	124	33	17	2	2	1.35	F3
35	Ø30	Ø30	Ø49	Ø85	8	33.3	142	38	20	2	2	1.35	F4
45	Ø35	Ø35	Ø64	Ø100	10	38.3	168	50	26	2	2	1.75	F5
	Ø40	Ø40	Ø64	Ø100	12	43.3	168	50	26	2	2	1.95	F6