Free position locking flat cylinder double acting/single rod

UFCD Series

● Bore size: ø25/ø32/ø40/ø50/ø63

RoHS CAD

Specifications

Item	UFCD-KL				
Bore size mm	ø25 or equiv.	ø32 or equiv.	ø40 or equiv.	ø50 or equiv.	ø63 or equiv.
Actuation	Double acting				
Working fluid	Compressed air				
Max. working pressure MPa	0.7 (≈100 psi, 7 bar)				
Min. working pressure MPa	0.25 (≈36 psi, 2.5 bar)				
Proof pressure MPa	1.05 (≈150 psi, 10.5 bar)				
Ambient temperature °C	-10 (14°F) to 60 (140°F) (no freezing)				
Port size	M5		Rc1/8		Rc1/4
Stroke tolerance mm	$^{+1.5}_{0}$ (to 50) $^{+2.0}_{0}$ (to 150)				
Working piston speed mm/s	50 to 500				
Cushion	Rubber cushion				
Lubrication	Not required (turbine oil class 1 ISO VG32 if necessary for lubrication)				
Holding force N	345	543	904	1350	2220
Allowable absorbed energy J	0.34	0.54	0.67	1.02	1.56

Rotation-stop precision/Allowable torque

Item	ø25 or equiv.	ø32 or equiv.	ø40 or equiv.	ø50 or equiv.	ø63 or equiv.
Non-rotating accuracy *2	±1°	±0.8°	±0.5°	±0.5°	±0.5°
Allowable torque N·m	1	1.6	2.5	3.9	5.9

*1: Avoid applying rotation torque with impact, or with violent changes in torque load direction.
*2: "Non-rotating accuracy" is the value when a torque load equivalent to 10% of "allowable torque" is applied to the end of the piston rod.

Stroke length

Model No.	Bore size (mm)	Standard stroke length (mm)	Max. stroke length (mm)	Min. stroke length (mm)
UFCD-KL	ø25, ø32 ø40, ø50 ø63 or equiv.	5/10/15/20/25 30/40/50	150	1

*1: The custom stroke length is available in 1 mm increments.
*2: The min. stroke length varies depending on switch mounting method. Refer to the following table.

Min. stroke length with switch

1		2	
Rod side installation	Head side installation	Different surface mounting	Same surface mounting
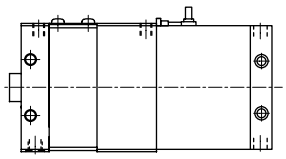	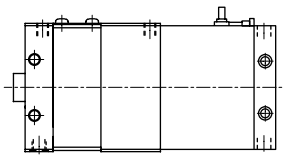	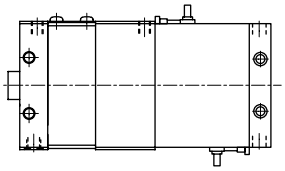	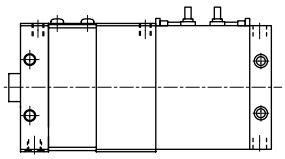
10 mm		15 mm	35 mm(ø25/32/40/50) 30 mm(ø63)

LCM
LCR
LCG
LCW
LCX
STM
STG
STS/STL
STR2
UCA2
ULK*
JSK/M2
JSG
JSC3/JSC4
USSD
UFCD
USC
UB
JSB3
LMB
LML
HCM
HCA
LBC
CAC4
UCAC2
CAC-N
UCAC-N
RCS2
RCC2
PCC
SHC
MCP
GLC
MFC
BBS
RRC
GRC
RV3*
NHS
HRL
LN
Hand
Chuk
MecHnd/Chuk
ShkAbs
FJ
FK
SpdContr
Ending

Switch specifications

● Proximity switch

Item	Proximity 2-wire		Proximity 3-wire		
	M2V	M2WV (2-color display)	M3V	M3PV (Made to order)	M3WV (2-color display)
Applications	Dedicated for programmable controller		Programmable controller, relay, IC circuit, small solenoid valve		
Output method	-	NPN output	NPN output	PNP output	NPN output
Power supply voltage	-		4.5 to 28 VDC		10 to 28 VDC
Load voltage	10 to 30 VDC		30 VDC or less		
Load current	5 to 30 mA		100 mA or less	100 mA or less	100 mA or less
Indicator lamp	LED (Lit when ON)	Red/green LED (Lit when ON)	LED (Lit when ON)	Yellow LED (Lit when ON)	Red/green LED (Lit when ON)
Leakage current	1 mA or less		10 μA or less	0.05 mA or less	10 μA or less
Weight g	1 m:22 3 m:57 5 m:93				

● Reed switch

Item	Reed 2-wire			
	MOV		M5V	
Applications	Programmable controller, relay		For programmable controller, relay, IC circuit (without indicator lamp), serial connection	
Power supply voltage	-		-	
Load voltage	12/24 VDC	110 VAC	5/12/24 VDC	110 VAC or less
Load current	5 to 50 mA	7 to 20 mA	50 mA or less	20 mA or less
Indicator lamp	LED (Lit when ON)		Without indicator lamp	
Leakage current	0 mA			
Weight g	1 m:22 3 m:57 5 m:93			

*1: Refer to Ending Page 1 for other switch specifications.
*2: Dimensions depend on switch model No. Refer to Ending Page 13 for details.

Cylinder weight

(Unit: g)

Bore size (mm)	Product weight when stroke length (S) = 0 mm	Additional weight per S = 10 mm	Switch weight	Mounting bracket weight
ø25 or equiv.	454	26	Refer to the weight in the switch specifications.	2
ø32 or equiv.	613	37		
ø40 or equiv.	1046	46		
ø50 or equiv.	1730	71		
ø63 or equiv.	3088	90		

(Example) Product weight of UFCD-KL-32-20
- ● Product weight when S = 0 mm ..... 613 g
- ● Additional weight when S = 20 mm ..... $37\ g \times \frac{20}{10} = 74\ g$
- ● Product weight ..... 613 g+74 g = 687 g

Theoretical thrust table

(Unit: N)

Bore size (mm)	Operating direction	Working pressure MPa				
		0.3	0.4	0.5	0.6	0.7
ø25	Push	1.48×10^2	1.97×10^2	2.46×10^2	2.96×10^2	3.45×10^2
	Pull	1.14×10^2	1.52×10^2	1.90×10^2	2.28×10^2	2.66×10^2
ø32	Push	2.33×10^2	3.10×10^2	3.88×10^2	4.66×10^2	5.43×10^2
	Pull	1.73×10^2	2.30×10^2	2.88×10^2	3.45×10^2	4.03×10^2
ø40	Push	3.87×10^2	5.16×10^2	6.45×10^2	7.75×10^2	9.04×10^2
	Pull	3.27×10^2	4.36×10^2	5.45×10^2	6.54×10^2	7.63×10^2
ø50	Push	5.80×10^2	7.73×10^2	9.66×10^2	1.16×10^3	1.35×10^3
	Pull	4.85×10^2	6.47×10^2	8.09×10^2	9.71×10^2	1.13×10^3
ø63	Push	9.53×10^2	1.27×10^3	1.59×10^3	1.91×10^3	2.22×10^3
	Pull	8.59×10^2	1.15×10^3	1.43×10^3	1.72×10^3	2.00×10^3

LCM
LCR
LCG
LCW
LCX
STM
STG
STS/STL
STR2
UCA2
ULK*
JSK/M2
JSG
JSC3/JSC4
USSD
UFCD
USC
UB
JSB3
LMB
LML
HCM
HCA
LBC
CAC4
UCAC2
CAC-N
UCAC-N
RCS2
RCC2
PCC
SHC
MCP
GLC
MFC
BBS
RRC
GRC
RV3*
NHS
HRL
LN
Hand
Chuk
MecHnd/Chuk
ShkAbs
FJ
FK
SpdContr
Ending

How to order

● With switch (built-in magnet for switch)

UFCD-KL - 25 - ◯ - 10 - F - M2V - R - N

Ⓐ Model No.
Ⓑ Bore size
Ⓒ Port thread
Ⓓ Stroke length
Ⓔ Lock direction
Ⓕ Switch model No.
* indicates the lead wire length.
Ⓖ Switch quantity
Ⓗ Option

Code	Description
Ⓐ Model No.	
UFCD-KL	Double acting/cushioned/with switch

Ⓑ Bore size (mm)	
25	ø25
32	ø32
40	ø40
50	ø50
63	ø63

Ⓒ Port thread	
Blank	Rc thread
NN	NPT thread (ø40 and over) (made-to-order product)
GN	G thread (ø40 and over) (made-to-order product)

Ⓓ Stroke length (mm)		
Bore size	**Stroke length *1**	**Custom stroke length**
ø25 to ø63	**1 to 150**	In 1 mm increments

Ⓔ Lock direction	
F	Forward locking
B	Backward locking

Ⓕ Switch model No.

Radial lead wire	Contact	Voltage AC	Voltage DC	Display	Lead wire
M2V*	Proximity		●	1-color display	2-wire
M2WV*			●	2-color display	
M3V*			●	1-color display	3-wire
M3WV*			●	2-color display	
M3PV*			●	1-color display (made-to-order)	
M0V*	Reed	●	●	1-color display	2-wire
M5V*		●	●	Without indicator lamp	

*** Lead wire length**	
Blank	1 m (standard)
3	3 m (option)
5	5 m (option)

Ⓖ Switch quantity	
R	1 on rod side
H	1 on head side
D	2
T	3

Ⓗ Option	
Blank	Rod end female thread
N	Rod end male thread

⚠ Precautions for model No. selection

*1: Refer to page 888 for the min. stroke length with switch.

[Example of model No.]

UFCD-KL-25-10-F-M2V-R-N

Model: Free position locking flat cylinder

Ⓐ Model No. : Double acting/cushioned/with switch
Ⓑ Bore size : ø25 mm
Ⓒ Port thread : Rc thread
Ⓓ Stroke length : 10 mm
Ⓔ Lock direction : Forward locking
Ⓕ Switch model No. : Proximity switch M2V, lead wire 1 m
Ⓖ Switch quantity : 1 on rod side
Ⓗ Option : Rod end male thread

How to order switch

● Switch body + mounting bracket set

FCS - M2V

Switch model No.
(Item Ⓕ on page 890)

● Switch body only

SW - M2V

Switch model No.
(Item Ⓕ on page 890)

● Mounting bracket set

FCS - M

Mounting bracket

LCM
LCR
LCG
LCW
LCX
STM
STG
STS/STL
STR2
UCA2
ULK*
JSK/M2
JSG
JSC3/JSC4
USSD
UFCD
USC
UB
JSB3
LMB
LML
HCM
HCA
LBC
CAC4
UCAC2
CAC-N
UCAC-N
RCS2
RCC2
PCC
SHC
MCP
GLC
MFC
BBS
RRC
GRC
RV3*
NHS
HRL
LN
Hand
Chuk
MecHnd/Chuk
ShkAbs
FJ
FK
SpdContr
Ending

Internal structure and parts list (Refer to the internal structure of FCD-KL regarding the cylinder)

● UFCD-KL-25, 32

• Lock direction: F (forward locking)

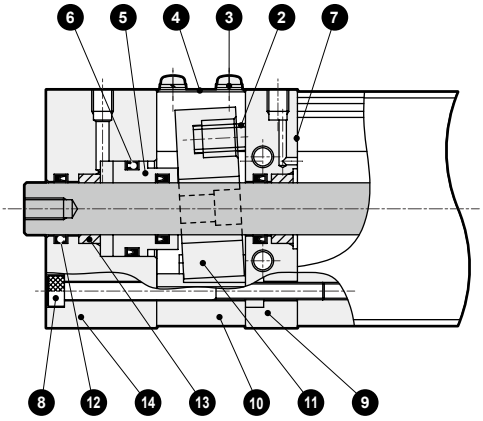

• Lock direction: B (backward locking)

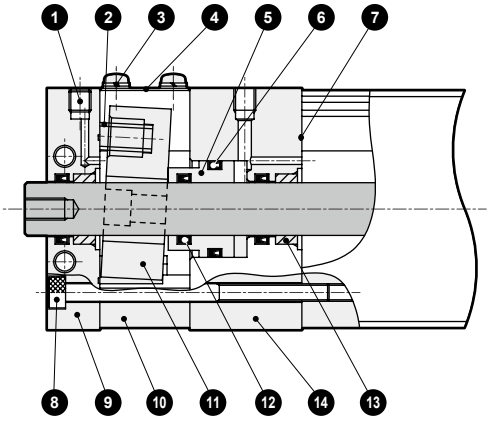

Cannot be disassembled

No.	Part name	Material	Remarks	No.	Part name	Material	Remarks
1	Hexagon socket set screw	Steel	Black finish	8	Hexagon socket head cap screw	Steel	Black finish
2	Spring	Steel	Black finish	9	Rod cover	Aluminum alloy	Black alumite
3	Cross-recessed pan head machine screw	Steel	Chromate	10	Lock tube	Aluminum alloy	Alumite
4	Dust cover	Stainless steel		11	Lock plate	Special steel	Chromate
5	Release piston	Copper alloy casting		12	Rod packing	Nitrile rubber	
6	Piston packing	Nitrile rubber		13	Metal bush	Oil-less metal	
7	Gasket	Nitrile rubber		14	Lock body	Aluminum alloy	Black alumite

Note: Do not disassemble, as the holding force may be affected, which is dangerous.

● UFCD-KL-40 to 63

• Lock direction: F (forward locking)

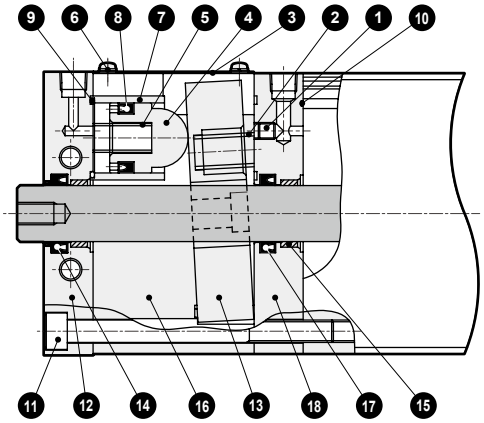

• Lock direction: B (backward locking)

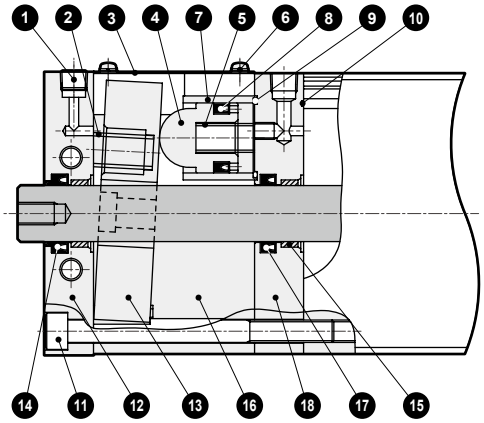

Cannot be disassembled

No.	Part name	Material	Remarks	No.	Part name	Material	Remarks
1	F type: Hexagon socket set screw	Steel		10	Gasket	Nitrile rubber	
	B type: Hex socket head cap taper thread plug	Steel		11	Hexagon socket head cap screw	Steel	Black finish
2	Brake spring	Steel	Black finish	12	Rod cover	Aluminum alloy	Black alumite
3	Dust cover	Stainless steel		13	Lock plate	Special steel	Chromate
4	Piston	Copper alloy casting		14	Rod packing	Nitrile rubber	
5	Piston spring	Steel		15	Metal bush	Oil-less metal	
6	Cross-recessed pan head machine screw	Steel	Chromate	16	Lock tube	Aluminum alloy	Alumite
7	Release piston tube	Stainless steel		17	Rod packing	Nitrile rubber	
8	Piston packing	Nitrile rubber		18	Lock body	Aluminum alloy	Black alumite
9	O-ring	Nitrile rubber					

Note: Do not disassemble, as the holding force may be affected, which is dangerous.

Dimensions (ø25)

● UFCD-KL-25-F (forward locking)

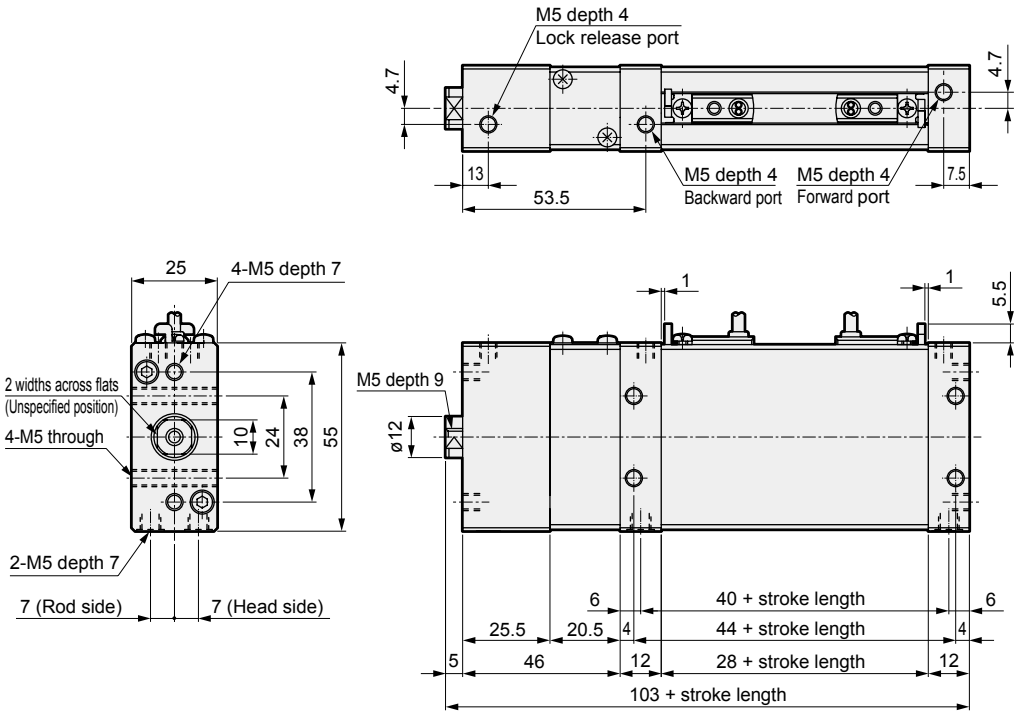

● Rod end male thread
(Option code: N)

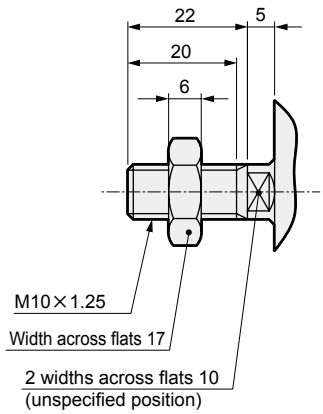

*1: For same-surface installation with 2 switches, the stroke length of 35 mm and over is required. For the stroke length of that value or less, set on both sides.

● UFCD-KL-25-B (backward locking)

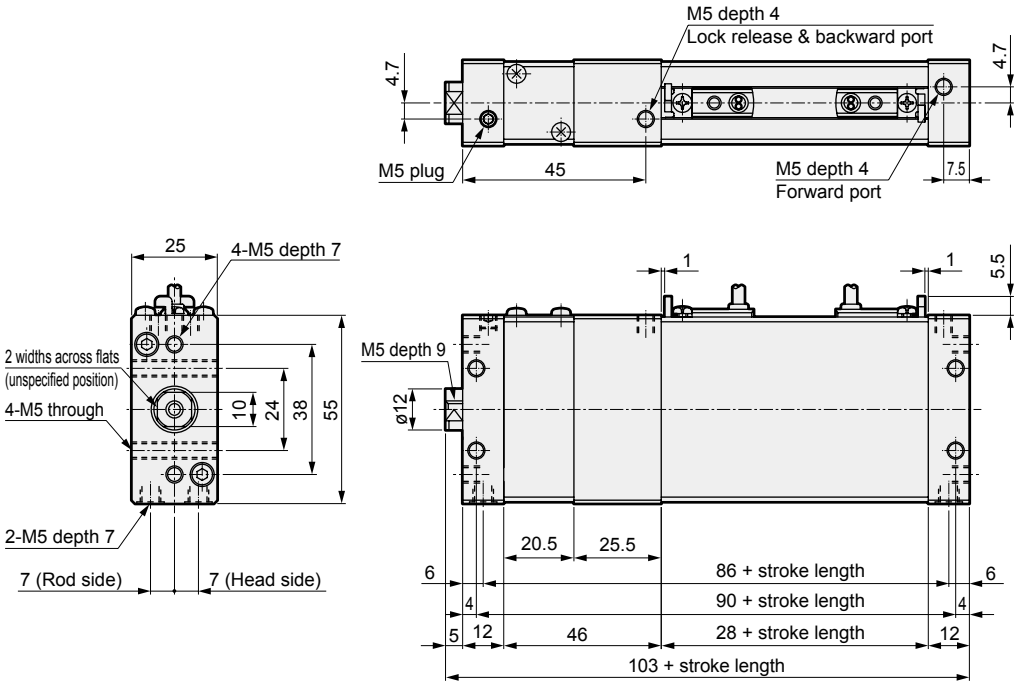

*1: For same-surface installation with 2 switches, the stroke length of 35 mm and over is required. For the stroke length of that value or less, set on both sides.

LCM
LCR
LCG
LCW
LCX
STM
STG
STS/STL
STR2
UCA2
ULK*
JSK/M2
JSG
JSC3/JSC4
USSD
UFCD
USC
UB
JSB3
LMB
LML
HCM
HCA
LBC
CAC4
UCAC2
CAC-N
UCAC-N
RCS2
RCC2
PCC
SHC
MCP
GLC
MFC
BBS
RRC
GRC
RV3*
NHS
HRL
LN
Hand
Chuk
MecHnd/Chuk
ShkAbs
FJ
FK
SpdContr
Ending

Dimensions (ø32)

● UFCD-KL-32-F (forward locking)

● Rod end male thread (Option code: N)

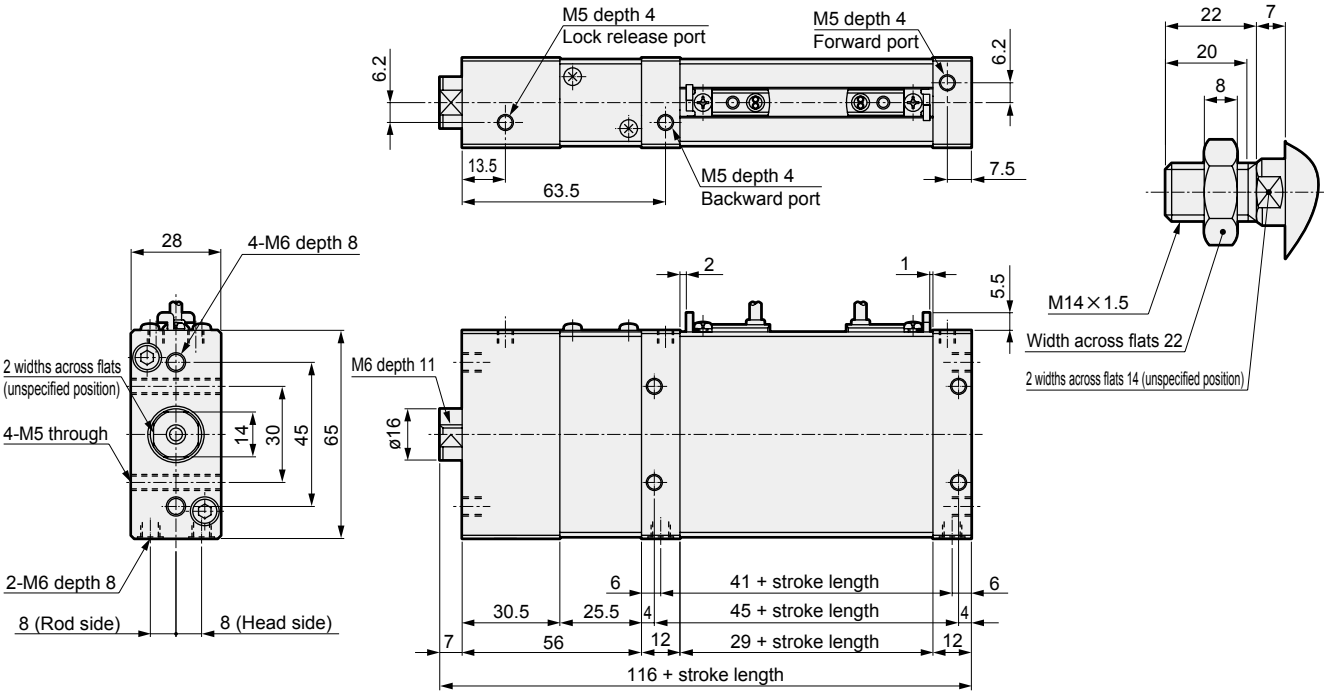

*1: For same-surface installation with 2 switches, the stroke length of 35 mm and over is required. For the stroke length of that value or less, set on both sides.

● UFCD-KL-32-B (backward locking)

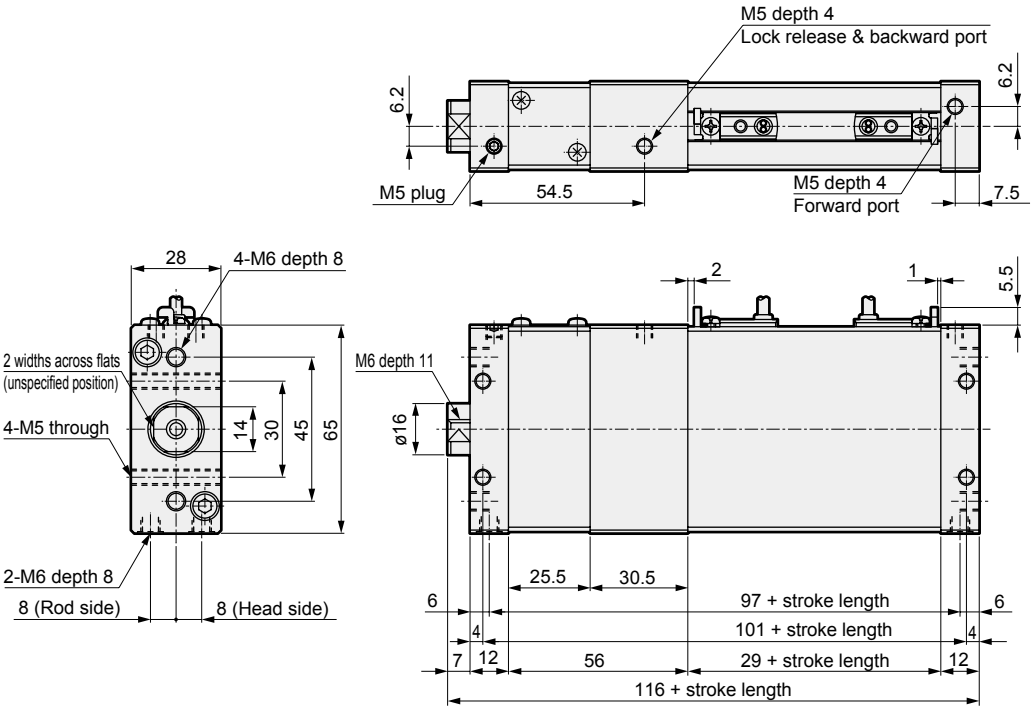

*1: For same-surface installation with 2 switches, the stroke length of 35 mm and over is required. For the stroke length of that value or less, set on both sides.

Dimensions (ø40)

● UFCD-KL-40-F/B (forward/backward locking)

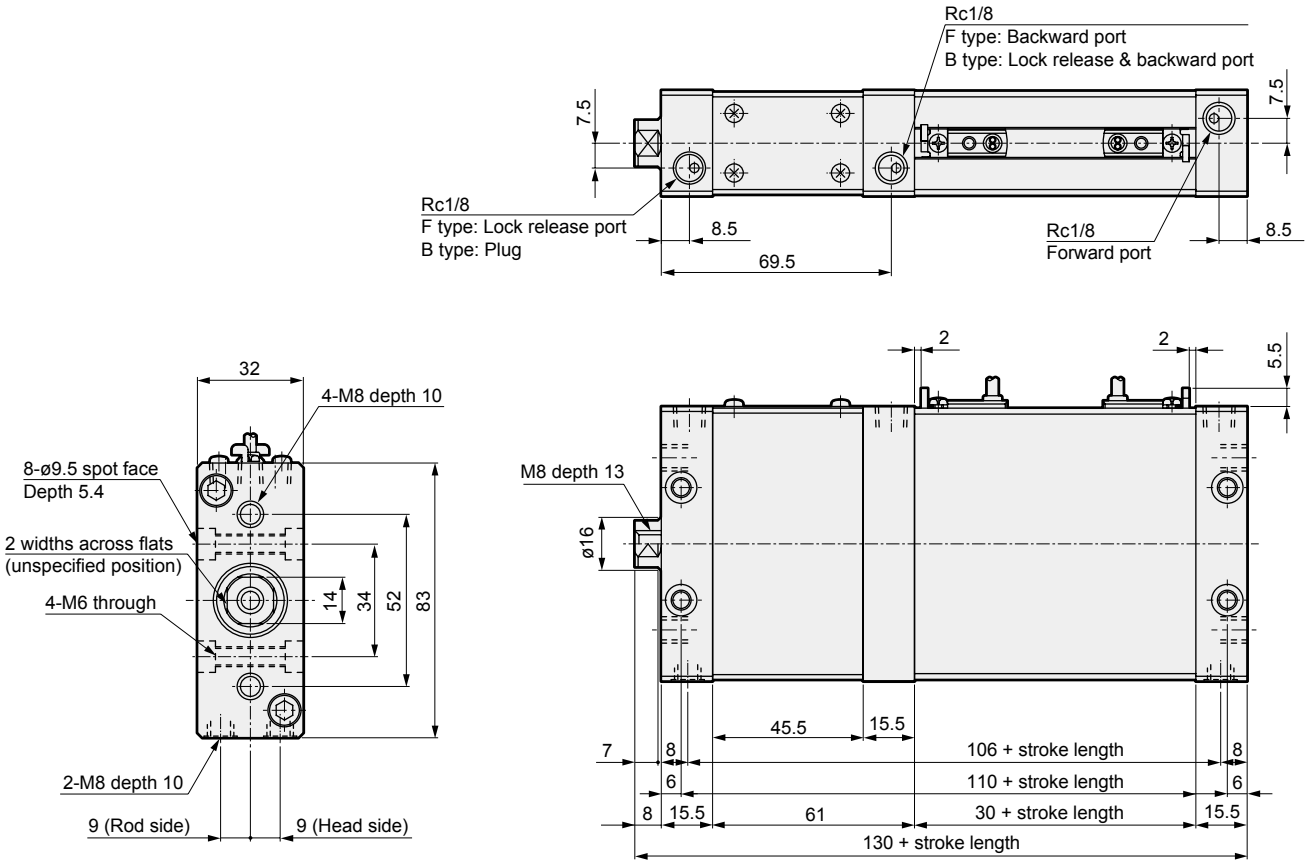

● Rod end male thread
(Option code: N)

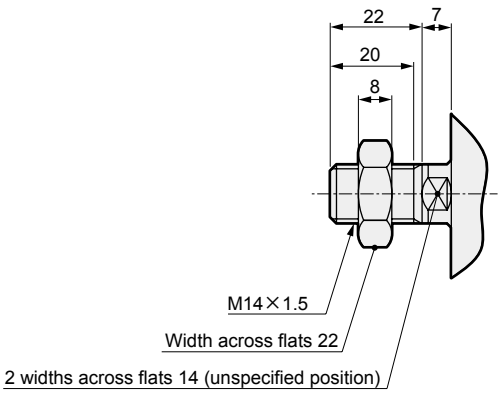

*1: For same-surface installation with 2 switches, the stroke length of 35 mm and over is required. For the stroke length of that value or less, set on both sides.

LCM
LCR
LCG
LCW
LCX
STM
STG
STS/STL
STR2
UCA2
ULK*
JSK/M2
JSG
JSC3/JSC4
USSD
UFCD
USC
UB
JSB3
LMB
LML
HCM
HCA
LBC
CAC4
UCAC2
CAC-N
UCAC-N
RCS2
RCC2
PCC
SHC
MCP
GLC
MFC
BBS
RRC
GRC
RV3*
NHS
HRL
LN
Hand
Chuk
MecHnd/Chuk
ShkAbs
FJ
FK
SpdContr
Ending

Dimensions (ø50)

● UFCD-KL-50-F/B (forward/backward locking)

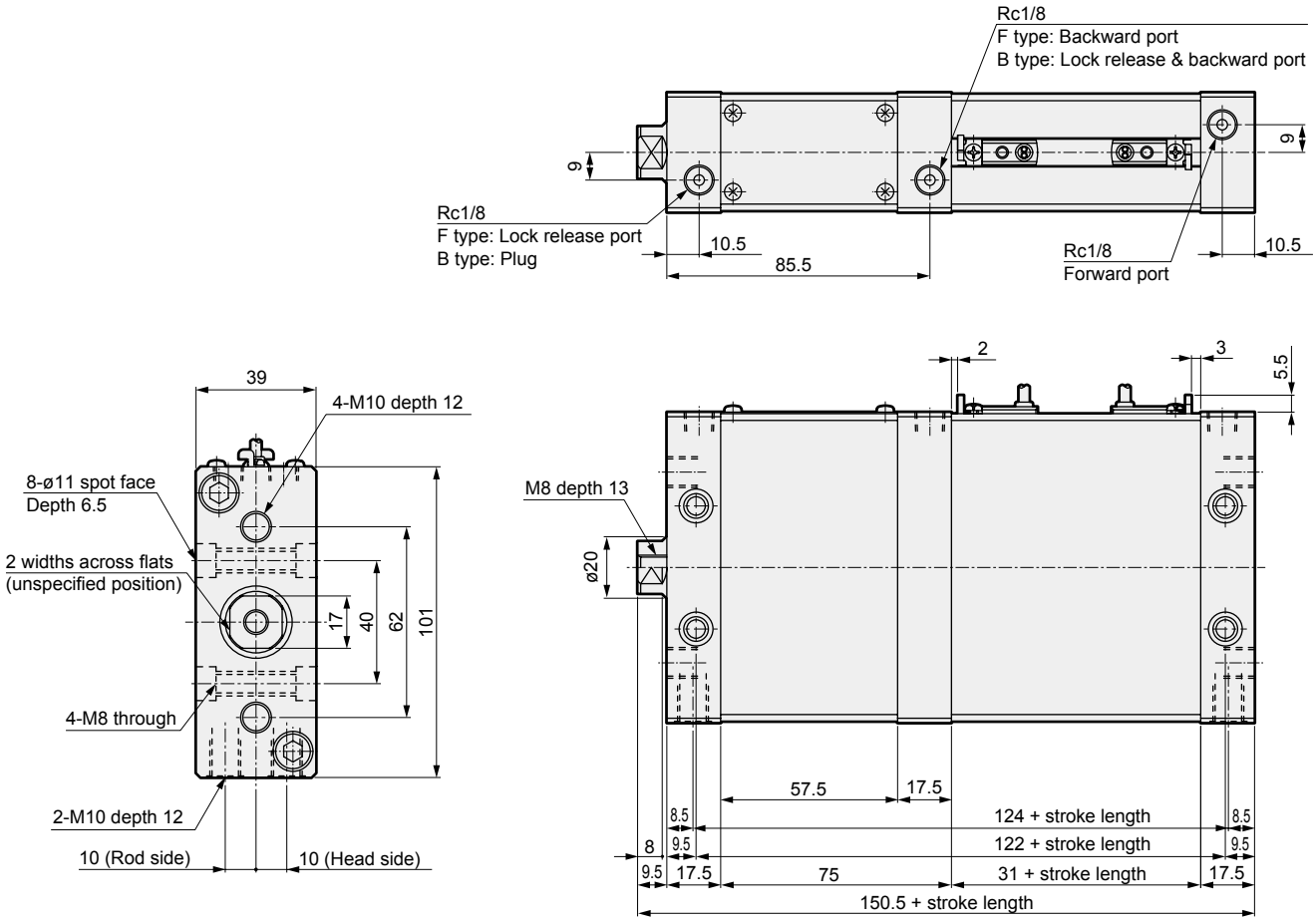

● Rod end male thread
(Option code: N)

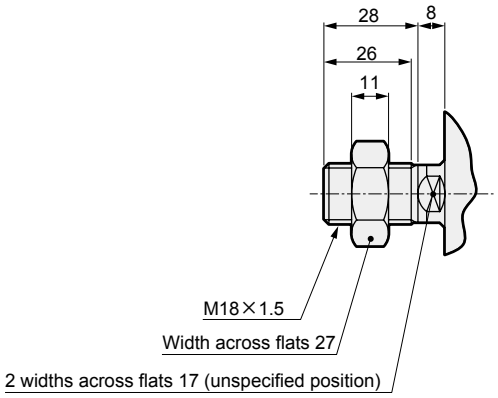

*1: For same-surface installation with 2 switches, the stroke length of 35 mm and over is required. For the stroke length of that value or less, set on both sides.

Dimensions (ø63)

● UFCD-KL-63-F/B (forward/backward locking)

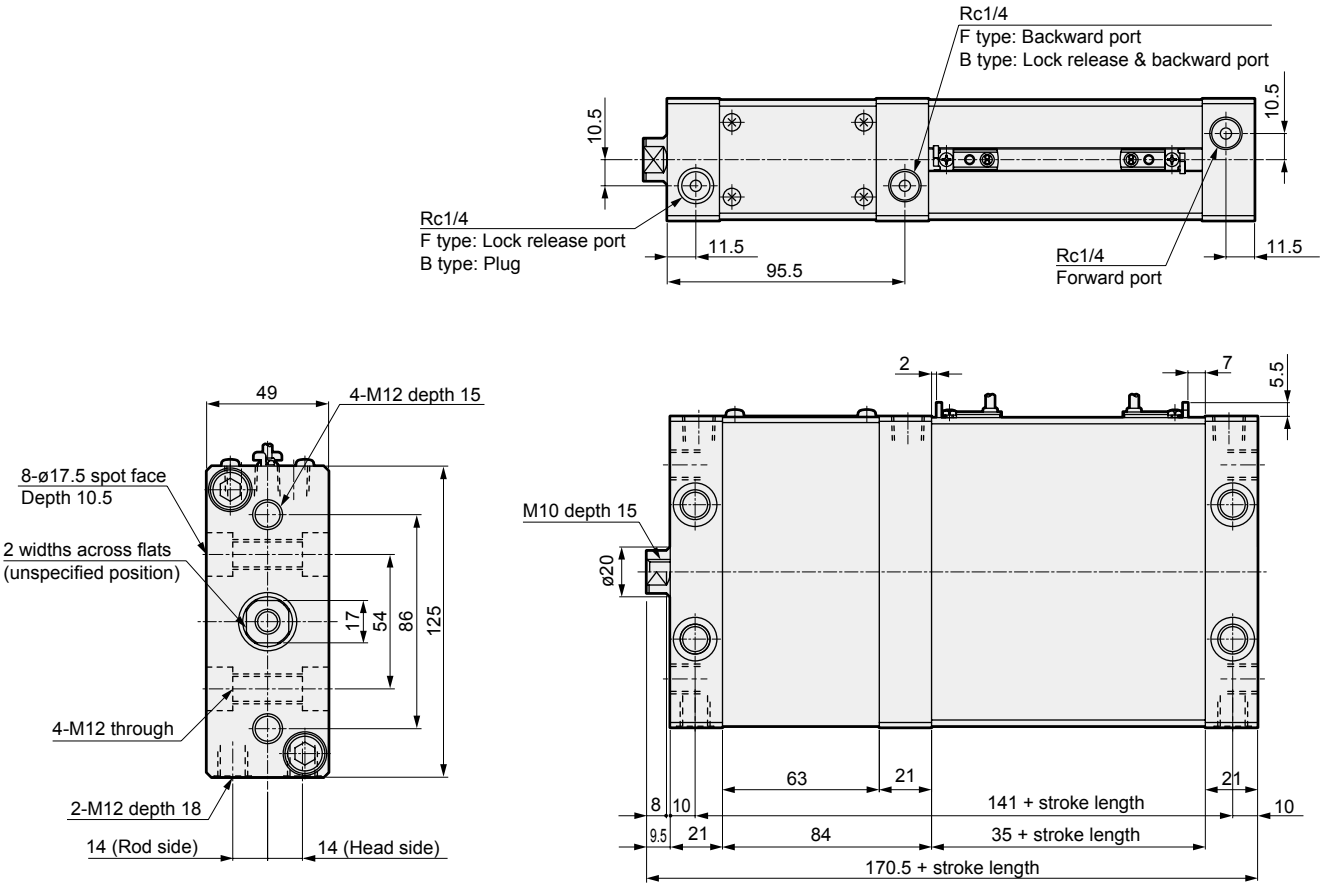

● Rod end male thread
(Option code: N)

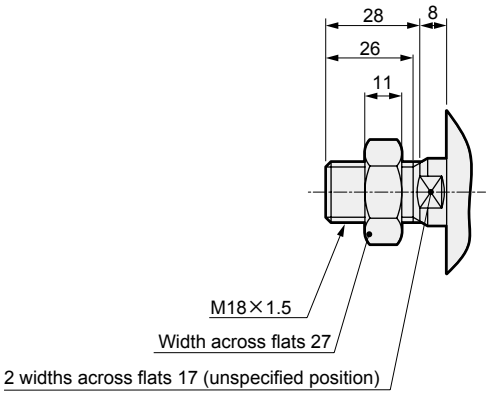

*1: For same-surface installation with 2 switches, the stroke length of 30 mm and over is required. For the stroke length of that value or less, set on both sides.